International specialized medium for agricultural mechanization in developing countries

ISSN 0084-5841

AMA

AGRICULTURAL MECHANIZATION IN ASIA, AFRICA AND LATIN AMERICA

VOL.17, NO.4, AUTUMN 1986

FARM MACHINERY INDUSTRIAL RESEARCH CORP.

ISEKI

ISEKI...Dedicated abundant harvests

As the means of producing life-sustaining food, agriculture surely rates as one of the most important industries in the world.

Since its founding 60 years ago, ISEKI has been doing its part to ensure that those engaged in the worldwide agricultural effort can meet modern challenges. Through the production of quality farm machinery and labor saving systems, ISEKI has become famous as the premier manufacturer of such machinery.

It is ISEKI's sincere hope that by continuing these efforts, world agriculture will further develop, thereby producing abundant harvests and world peace for people everywhere.

to producing and world peace

ISEKI & CO., LTD.

Foreign Affairs Division
3-6, Kioi-cho, Chiyoda-ku, Tokyo, 102 Japan
Cable Address: ISEKIRICE TOKYO
Telex: 232-2752, 232-2753
Phone: (03) 238-5245~5260

A NOTE TO AMA CONTRIBUTORS

The Editorial Staff of the AMA requests contributors of articles for publication to observe the following editorial policy and guidelines in order to improve communication and to facilitate the editorial process :

Criteria for Article Selection

Priority in the selection of articles for publication is given to those that –

a. are written in the English language ;
b. are relevant to the promotion of agricultural mechanization, particularly for the developing countries ;
c. have not been previously published elsewhere, or, if previously published are supported by a copyright permission ;
d. deal with practical and adoptable innovations by small farmers with a minimum of complicated formulas, theories and schematic diagrams ;
e. have a 50 to 100-word abstract, preferably preceding the main body of the article ;
f. are typewritten, double-spaced, about 4,000 words (approximately equivalent to 8 pages of AMA-size paper) ; and those that
g. are supported by authentic sources, reference or bibliography.

Rejected/Accepted Articles

a. As a rule, articles that are not chosen for AMA publication are not returned unless the writer(s) asks for their return and are covered with adequate postage stamps. At the earliest time possible, the writer(s) is advised whether the article is rejected or accepted.
b. When an article is accepted but requires revision/modification, the details will be indicated in the return reply from the AMA Chief Editor in which case such revision/modification must be completed and returned to AMA within three months from the date of receipt from the Editorial Staff.
c. "The AMA does not pay for articles published. However, the writers are given collectively 5 free copies (one copy air-mailed and 4 copies sent by surface/sea mail) of the AMA issue wherein their articles are published. In addition, a single writer is given 25 off-prints of the article and plural writers are given 35 off-prints (also sent by surface/sea mail)"

Procedure

a. Articles for publication (original and one-copy) must be sent to AMA through the Co-operating Editor in the country where the article originates. (Please refer to the names and addresses of Co-operating Editors in any issue of the AMA). However, in the absence of any Co-operating Editor, the article may be sent directly to the AMA Chief Editor in Tokyo.
b. Contributors of articles for the AMA for the first time are required to attach a passport-size ID photograph (black and white print preferred) to the article. The same applies to those who have contributed articles three years earlier. In either case, ID photographs taken within the last 6 months are preferred.
c. The article must bear the writer(s) name, title/designation, office/organization, nationality and complete mailing address.

Format/Style Guidance

a. Whether the article is a technical or popular contribution, lecture, research result, thesis or special report, the format must contain the following features :
   i) a brief and appropriate title ;
   ii) the writer(s) name, designation/title, office/organization ; and mailing address ;
   iii) an abstract following ii) above ;
   iv) body proper (text/discussion) ;
   v) conclusion/recommendation ; and a
   vi) bibliography
b. The pages must be numbered (Arabic numeral) successively at the top center. Tables, graphs and diagrams must likewise be numbered. Table numbers must precede table titles, e.g., "Table 1. Rate of Seeding per Hectare". Such table number and title must be typed at the top center of the table. On the other hand, graphs, diagrams, maps and photographs are considered figures in which case the captions must be indicated below the figure and preceded by number, e.g., "Figure 1. View of the Farm Buildings".
c. Tables and figures must be preceded by texts or discussions. Inclusion of such tables and figures not otherwise referred to in the text/discussion must be avoided.
d. Tables must be typed clearly without vertical lines or partitions. Horizontal lines must be drawn only to contain the sub-title heads of columns and at the bottom of the table.
e. Express measurements in the metric system and crop yields in metric tons per hectare (t/ha) and smaller units in kilogram or gram (kg/plot or g/row).
f. Indicate by footnotes or legends any abbreviations or symbols used in tables or figures.
g. Convert national currencies in US dollars and use the later consistently.
h. Round off numbers, if possible, to one or two decimal units, e.g., 45.5kg/ha instead of 45.4762kg/ha.
i. When numbers must start a sentence, such numbers must be written in words, e.g., Forty-five workers . . . , or Five tractors . . ." instead of 45 workers . . , or, 5 tractors.

CONTRIBUTORS WANTED

This publication, published quarterly, has an objective to promote agricultural mechanization in developing countries. Its readers consist of so many people in various fields such as farmers, dealers, manufacturers, researchers, government officials, students, etc. not only in Asia but also in the whole world. To enrich contents and to reflect many opinions, we want contributors for **Agricultural Mechanization in Asia" Africa and Latin America.** Articles, comments, investigations, reports and so on will be received with open arms. If you hope to contribute, contact us without delay.

FARM MACHINERY INDUSTRIAL RESEARCH CORP.

7-2 Kanda Nishikicho, Chiyoda-ku, Tokyo, Japan (Tel. 03/291-5717-8, 3671-4)

SUKIGARA

CULTIVATOR & RIDGER

IMPLEMENTS & ATTACHMENTS FOR TRACTORS

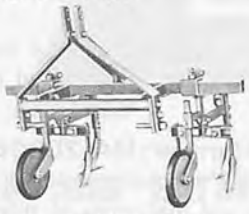

Double-Row Cultivator TBC
(Tool Bar & Cultivator)

Triple-Row Ridger TCRM

Double-Row Ridger TBR-H2
(Tool Bar & Ridger)

SUKIGARA AGRICULTURAL MACHINERY CO., LTD.

YAHAGI-CHO, OKAZAKI-CITY, AICHI PREF., 444 JAPAN
TEL OKAZAKI (0564)31-2107
FAX (0564)32-1990(G2)
CABLE ADDRESS: "SUKIGARA" OKAZAKI, JAPAN

MIDDLE EAST & WORLD WATER DIRECTORY

الدليل المائي للشرق الأوسط والعالم

The MIDDLE EAST & WORLD WATER DIRECTORY consists of two separate volumes; each having its main entries, alphabetical and product activity indexes.

VOLUME I: Compiles over 6000 listings to leading importers, distributors, contractors, wholesalers, consulting engineers in addition to public sector firms serving the water and sewage industry of the Middle East and Africa.

VOLUME II: Includes over 5000 leading international manufacturers, suppliers, consultants and contractors planning to have a share of the stake to the water and sewage industry of the Middle East and Africa.

By having your copy of the MEWWD, you will have the water world export / industry at your fingertips. Order your copy TODAY.

MONEY BACK GUARANTEE: The MEWWD is sold under our «Money Back Guarantee» plan. If the book fails to meet expectations and is returned back by post immediately in good condition payment will be fully refunded.

ORDER FORM

Mail this coupon with remittance to: Mrs: Mona Chatila, Arab Water World, PO Box 13-5121, Beirut-Lebanon, Telephone: 352413/19, Telex: 23008 MIYAH LE.

Please send .... (copies) of the Middle East & World Water Directory. Price of 2 volumes is US $ 90 in the Middle East and Africa and $ 110.- elsewhere. I enclose a cheque value US $ .... payable to Arab Water World, drawn on any US bank.
I am remitting the money value US $ ... through my bank to your account No. 249/238, Arab African International Bank, Hamra-Branch, Beirut.

Please invoice me ( ) my company ( )

Name _____
Organisation _____
Address _____
_____
Country _____
Telephone _____ Telex _____
Signed _____ Date _____

Niplo AGRICULTURAL MACHINERY

(1) **Rotary Tiller : SX-1700**
The spiral bevel gear on the drive shaft is lighter and stronger than older types and much more silent in operation.
We have reduced weight but maintained top cutting efficiency in these new ribbed blades.

(2) **Drive Harrow : HA-2000B**
This makes it possible to bring back into the paddy field the soil that tends to pile up against the border levee, in the final puddling stage.

(3) **Reversible Plow : MR-44N**
A high performance standard plow for 4-6PS power tillers.
The plow can be adjusted to perform well in all types of soil by adjusting the differential fingers.

Model SX-1700(25～45ps)

Model HA-2000B(20～24ps)

Model MR-44N(4～6ps)

MATSUYAMA PLOW MFG. CO., LTD.

2949, Shiokawa, Maruko-machi, Nagano-ken, 386-04 Japan

KOBASHI

Our high level of technique has been attained through a long-time study on soils everywhere

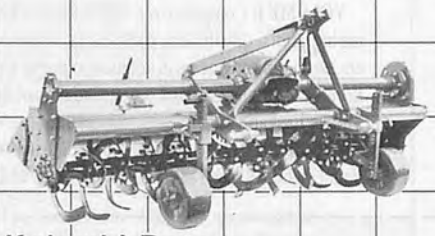

Kobashi Tillage Blade
The supreme quality and the maximum output based on traditions and new techniques

Kobashi Rotor
A new series for 20 ps to 100 ps tractors incorporated with improved techniques

KOBASHI
KOBASHI KOGYO CO., LTD.
684, Nakaune, Okayama City, Japan
Phone: 0862(98)3111
Telex: 5922188 KBSOKA J

KOBASHI

International specialized medium for agricultural mechanization in developing countries

AMA

AGRICULTURAL MECHANIZATION IN ASIA, AFRICA AND LATIN AMERICA

VOL.17, NO.4, AUTUMN 1986

Edited by

YOSHISUKE KISHIDA

Published quarterly by

Farm Machinery Industrial Research Corp.

in cooperation with

The Shin-Norinsha Co., Ltd.

and

The International Farm Mechanization Research Service

TOKYO

Yoshisuke Kishida, Publisher & Chief Editor
Yoshikuni Kishida, Advisory Director

Contributing Editors and Cooperators

- AFRICA -
Van Lancker, Julien G. (Brundi)
Hanna, George B. (Egypt)
Kandiah, Arumugam (Ethiopia)
Ampratwum, David Boakye (Ghana)
Choudhury, Md. Shahansha-ud-Din (Nigeria)
Igbeka, Joseph C. (Nigeria)
Odigboh, E.U. (Nigeria)
Oni, Kayode C. (Nigeria)
Kuyembeh, N.G. (Sierra Leone)
Abdoun, Abdien Hassan (Sudan)
Bedri, Mohamed A. (Sudan)
Saeed, Amir Bakheit (Sudan)
Saxena, N.C. (Tanzania)

- AMERICAS -
Nääs, Irenilza de Alencar (Brazil)
Ghaly, Abdelkader E. (Canada)
Valenzuela, A.A. (Chile)
Mirdha, A.H. (Mexico)
Chancellor, William J. (U.S.A.)
Esmay, Merle L. (U.S.A.)
Goyal, Megh Raj (U.S.A.)
Srivastava, Krishna P. (West Indies)

- ASIA and OCEANIA -
Farouk, Shah M. (Bangladesh)
Mazed, M.A. (Bangladesh)
Gurung, Manbahadur (Bhutan)
Wang, Wanjun (China)
Chandra, Satish (Fiji)
Michael, A.M. (India)
Verma, S.R. (India)
Soedjatmiko (Indonesia)
Sakai, Jun (Japan)
Snobar, Bassan A. (Jordan)
Chung, Chang Joo (Korea)
Haffar, Imad (Lebanon)
Bardaie, Muhamad Zohadie (Malaysia)
Shrestha, Bala Krishna (Nepal)
Afzal, Mohammad (Pakistan)
Chaudhry, Allah Ditta (Pakistan)
Chaudhry, Md. Siddique (Pakistan)
Devrajani, Bherulal T. (Pakistan)
Mughal, A.A. (Pakistan)
Nath, Surya (Papua New Guinea)
Lantin, Reynaldo M. (Philippines)
Lee, Chul Choo (Philippines)
Venturina, Ricardo P. (Philippines)
Aziz, M.H. Abdel (Saudi Arabia)
Illangantileke, S. (Sri Lanka)
Kathirkamathamby, Suppiah (Sri Lanka)
Peng, Tien-Song (Taiwan)
Singh, Gajendra (Thailand)
Pinar, Yunus (Turkey)

- EUROPE -
Kaloyanov, Anastas P. (Bulgaria)
Pedersen, T. Touggaard (Denmark)
Pellizzi, Giuseppe (Italy),
Moens, Adrian (Netherlands)
Kilgour, John (U.K.)

EDITORIAL STAFF
(Tel. 03/291-5718)
Yoshisuke Kishida, Chief Editor
Kensuke Sakurai, Managing Editor
Yoshinori Sasaki, Assistant Editor
Noriyuki Muramatsu, Assistant Editor

ADVERTISING
(Tel. 03/291-3672)
Shuji Kobayashi, Manager (Head Office)
Hiroshi Yamamoto, Manager (Branch Office)
Advertising Rate: 300 thousand yen per a page

CIRCULATION
(Tel. 03/291-5718)
Soichiro Fukutomi, Manager
Editorial, Advertising and Circulation Headquarters
7, 2-chome, Kanda Nishikicho, Chiyoda-ku, Tokyo, 101 Japan

Copyright © 1986 by
FARM MACHINERY INDUSTRIAL RESEARCH CORP.
SHIN-NORIN Building
7, 2-chome, Kanda Nishikicho, Chiyoda-ku, Tokyo, 101 Japan
Printed in Japan

This is the 53rd issue since the issue, Spring of 1971

EDITORIAL

Towards More Realistic Machinery Designs

So much has already been written and said about the virtues of agricultural mechanization and farm machineries in terms of increasing food availability through increased agricultural productivity. A great deal of rhetoric has also been done about the role of farm machineries in releasing the farmers from the day-to-day, backbreaking toil, among many other considerations. And yet, not as much has been written about the desirability of rendering the machinery designs and development more realistic and attuned to the actual needs of varying types of agriculture.

To a certain extent, a few countries in the Third World have farm machinery programs going on in earnest. However, many others are still tinkering about the idea – apprehensive to give it a try on even small scale, either because some governments still fear that the advent of farm mechanization will displace farm labor at the expense of the national economy, or, this and that model of tractor is priced beyond the reach of the ordinary, small farmers who represent the majority in the Third World.

To this day, one thing is sure about the issue: there are pros and cons about mechanization and the pros seem to be finding it difficult to promote the idea of agricultural mechanization and higher productivity being intertwined.

One important source of the difficulty seems to stem from the machinery manufacturers' failure to fully grasp that historically, a great majority of the machinery models designed for use in a given country or peculiar agro-climatic conditions do not work as well in other countries even for the production of similar crops. And when this is the case, the immediate and lasting effect is that the prospective buyers/users in the recipient country do not only shy away from those models but also shun the entire farm mechanization idea. This might well be the rationale behind many countries being sluggish in importing farm machineries or timed in motivating domestic manufacture of the same.

A call for realistic machinery design is, therefore, addressed to research and development levels in farm machinery manufacture – to understand in clearer terms beforehand, the idiosyncracies of farming in a target country before such machineries are developed and mass-produced for export. This is where policy-makers, engineers, agronomists, academicians and even farmers themselves should pool their resources in the design of machineries fit for a given country/condition. In turn, that country either becomes a potential importer or is motivated to invite joint ventures with the exporter/manufacturer. This has, in fact, been the general pattern in the transfer of technology from an advanced country to a developing one. The beneficiaries in this regard is agriculture itself; the importer; exporter; manufacturer; and the economies of the countries concerned.

But let it not be said though that the AMA has no role, no matter how small, in this scenario. As a matter of fact, the AMA management has since been taking the initiative to drum up the interest of our readers who are concerned with research and development to make the next move in their spheres of operation. As usual, the AMA will willingly provide the link and the medium through subsequent issues towards more realistic and responsive machinery designs and development.

Yoshisuke Kishida
Chief Editor

Tokyo
October, 1986

CONTENTS

AGRICULTURAL MECHANIZATION IN ASIA, AFRICA AND LATIN AMERICA

Vol. 17, No. 4, Autumn, 1986

Yoshisuke Kishida	9	Editorial
Jun Sakai Surin Phongsupasamit Tadashi Kishimoto	11	Studies on Evolutional Steps for Plowing and Tractorization in Japan
Jan Mohammed Baloch Sheruddin B. Bukhari A.Q.A. Mughal Ali Nawaz Mirani	20	Effect of Restrained Linkage-Geometry on Tractor Performance
A. Bola Fashina J.C. Igbeka	25	Animal Draught: A Source of Power for Agricultural Development in a Developing Country
S.D. Sahu	29	Draught Animal Power Potential in North-Eastern Hill Region of India
T.B.S. Rajput	32	A Simple Recorder for Monitoring Irrigation Water Flow
Khawaja Altaf Hussain Hafiz Muhammad Muhir	35	Factors Affecting Choice and Use of Tillage Implements: Pakistan Setting
K.C. Oni M.A. Ali	39	Factors Influencing Threshability of Maize in Nigeria
Edmundo J. Hetz	45	Needs and Availability of Agricultural Machinery in Chile
Aziz Özmerzi Bahri Gökçebay	49	Farm Mechanization in Turkey
Megh R. Goyal	51	Agricultural Engineering Potential in Caribbean Basin
S.R. Verma Joginder Singh	59	Useful Gadgets for Manufacture of Low-Cost Agricultural Machinery
A.M. Abdalla G.M. Al-Hassan A.S. Al-Ghamdi K.A. Sallam	63	Performance and Tomato Yield in Cooled Greenhouse at Al-Hassa, Saudi Arabia
K. Kumar S. Bal	68	Nomographs for Sensible Heat Carried out of Furnace by Products of Combustion
V.V. Sreenarayanan P.K. Chattopadhyay	71	Factors Influencing Effectiveness of Radio-Frequency Dielectric Heating on Rice Bran
Kocky Uyeda	75	Simple and Low Cost on-Farm Paddy Dryer (Part-II)
News	78	
Book Review	79	

* * *

A Note to AMA Contributors 4
Index to Advertisers 81
Co-operating Editors 82
Back Issues 84

Studies on Evolutional Steps for Plowing and Tractorization in Japan

—The Unique Mechanization Promotion in Small-Scale Farming—

by
Jun Sakai
Professor
Agric. Engg. Dept.
Kyushu University
Hakozaki, Fukuoka 812
Japan

Surin Phongsupasamit
Graduate Student
Agric. Engg. Dept.
Kyushu University
Hakozaki, Fukuoka 812
Japan

Tadashi Kishimoto
Graduate Student
Agric. Engg. Dept.
Kyushu University
Hakozaki, Fukuoka 812
Japan

Abstract

Japanese agricultural mechanization, observed historically, is unique because the majority of small-scale family farming units were completely and successfully mechanized within only 15 years (from 1955 to 1970) mainly by hand tractors. And this mechanization of the farms developed step by step to fit the local farming conditions. Therefore, the effect of improving the farm machines gave animal-powered farming a fast but smooth shift to mechanization among small-scale family farms.

This paper concerns the technological development processes of tractorization with tillage implements in Japan. The authors classified 66 years (from 1920 to the present) of the historical development of tractorization into four periods as the stages of rotary power tillers, small hand tractors, small riding-tractors and the further diffusion of these tractors.

Introduction

Seedbed or rootbed preparation is first and important operation in crop production. There are many kinds of tillage implements depending on properties and state of the soil, size of field lot, crops to be planted and economic status of farmers.

The plow, one of the oldest and basic tillage implements, was developed and improved through the years and is still popularly used in the world at present. In the early period, plowing in Japan was performed by men and draft animals, and afterwards they were replaced by walking-type and riding-type tractors, hence land preparation became light work with less operating time. Moreover, the mechanical manipulation of soil could develop a desirable soil structure for plant growth. The transition, however, from hand labor and animal traction to mechanization is somewhat difficult and needs time because it involves a number of technical, economic and social problems.

The present study examines some important technical developments that enabled Japan to shift rather smoothly and rapidly from a traditional, animal-powered farming to a mechanical-powered agriculture. For example, the technological advancement and activities made on the traditional plows and the economical sizes of hand tractors proved very acceptable and appro-

---

1) Part of this paper is presented at the annual Meeting of Agricultural Machinery Society, Japan in 1986; 2) This paper is Part I of the research study on basic design theories of hand-tractors and plows for Asian paddy fields; 3) In this paper, the words "plough" and "animal-draught plough" are expressed as "plow" and "animal-draft plow", respectively; 4) *from Mechanical Engineering Department, Faculty of Engineering, Chulalongkorn University, Bangkok 10 500, Thailand.

priate for the small-scale family farms in Japan. Ultimately, the study hopes to influence the promotion of agricultural mechanization in developing countries for greater agricultural productivity.

Technological Development Processes

Size of Landholding and Mechanization Target

Japan, like many Asian countries, also used and depended on traditional animal-draft plows to cultivate small paddy fields in the past. Rice is Asia's most important staple, hence rice cultivation is equally an important agricultural activity in the region. In Japan, however, the average size of paddy field is generally smaller than in the neighboring Asian countries.

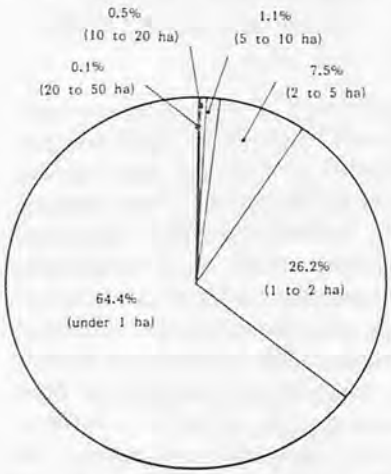

Fig. 1 Percentage distribution of landholdings by size of total cultivated areas in Japan (when hand tractorization is at a beginning stage, 1960).

Table 1 shows the percentage distribution of landholdings, by size, in total cultivated areas of selected Asian countries in the 1960s when the hand tractor was at a beginning stage in Japan. The percentage distribution of landholdings in Japan at that time is shown in **Fig. 1** where about 91% of the landholdings were less than 2 ha, and 65% were less than 1 ha. In comparison the percentage of less than 2 ha of landholdings was 63% in India; 88% in Indonesia; 95% in the Republic of Korea; 41% in the Philippines, 84% in Sri Lanka and 98% in Thailand.[1]

The main target of Asian farm mechanization emphasizes the need to mechanize the majority of the small-scale family farms for lowland rice production which are different from Western countries where upland farming is dominant.

Historical Diffusion Trends of Major Farm Machinery

Fig. 2 shows the diffusion trends in the major farm machineries[2] over the last 54 years.

The period between 1940 and 1955 saw the end of animal-powered farming and the advent of a few agricultural machines in rural areas such as power threshers, huskers, and engines. Electric motors were used to drive stationary farm machines which were used extensively in the early stage of agricultural mechanization in the country. The power threshers were mainly retained by the individual farm family. They were driven by 3 to 4 hp kerosene engines or electric motors.

By 1953, many other farm machines such as power sprayers, power dusters, power tillers, grain dryers and so forth started to be used extensively all over the country.

As shown in **Fig. 2**, the entire Japanese agriculture that used to be principally based on animal power metamorphosed almost overnight into mechanized farming using hand tractors only within a span of 15 years. Since about 1970, hand-tractor farming has being shifted gradually to riding-tractor farming. No other developed country experienced a similar phenomenon.

The Japanese lesson seems to show that in order to mechanize "the majority" of small family farms, given Asian conditions and farmsizes, small hand tractors of less than 6 hp each were necessary. In comparison, farms larger than 2 ha needed big hand tractors of more than 7 hp each.

This means that Japanese farms were not immediately mechanized with large-scale machines, but started with small hand tractor designed to meet the needs of equally small landholdings which comprised the majority. Therefore, the agricultural mechanization promotion need not start with large machineries where family-sized farms are not only small but also represent the majority.

Stages of Tractorization

The path taken by farm mechan-

Table 1 Percent Distribution of Landholdings by Size of Total Cultivated Areas in Selected Asian Countries, 1960 [a]

Country	Census year	Total number of holdings	under 1 ha	1 and under 2 ha	2 and under 5 ha	5 and under 10 ha	10 and under 20 ha	20 and under 50 ha	50 and under 100 ha	100 and under 200 ha
India	1960	100.0	40.7	22.3	23.6	8.7	3.7	1.0	0.1	–
Indonesia	1963	100.0	70.1	18.2	9.2	1.8	0.6	0.2	–	–
Japan	1960	100.0	64.6	26.2	7.5	1.1	0.5	0.1	–	–
Korea, Republic of	1961	100.0	71.0	24.1	4.9	–	–	–	–	–
Philippines	1960	100.0	11.5	29.6	39.9	13.4	4.6	0.7	0.1	0.1
Sri Lanka	1960	100.0	65.3	19.0	12.5	2.1	0.7	0.3	0.1	–
Thailand [b]	1963	100.0	90.8	8.1	1.1	–	–	–	–	–

a 1960 marked the beginning stage of farm mechanization in Japan.
b Source: National Statistical Office, Census of Agriculture, Thailand, 1963.

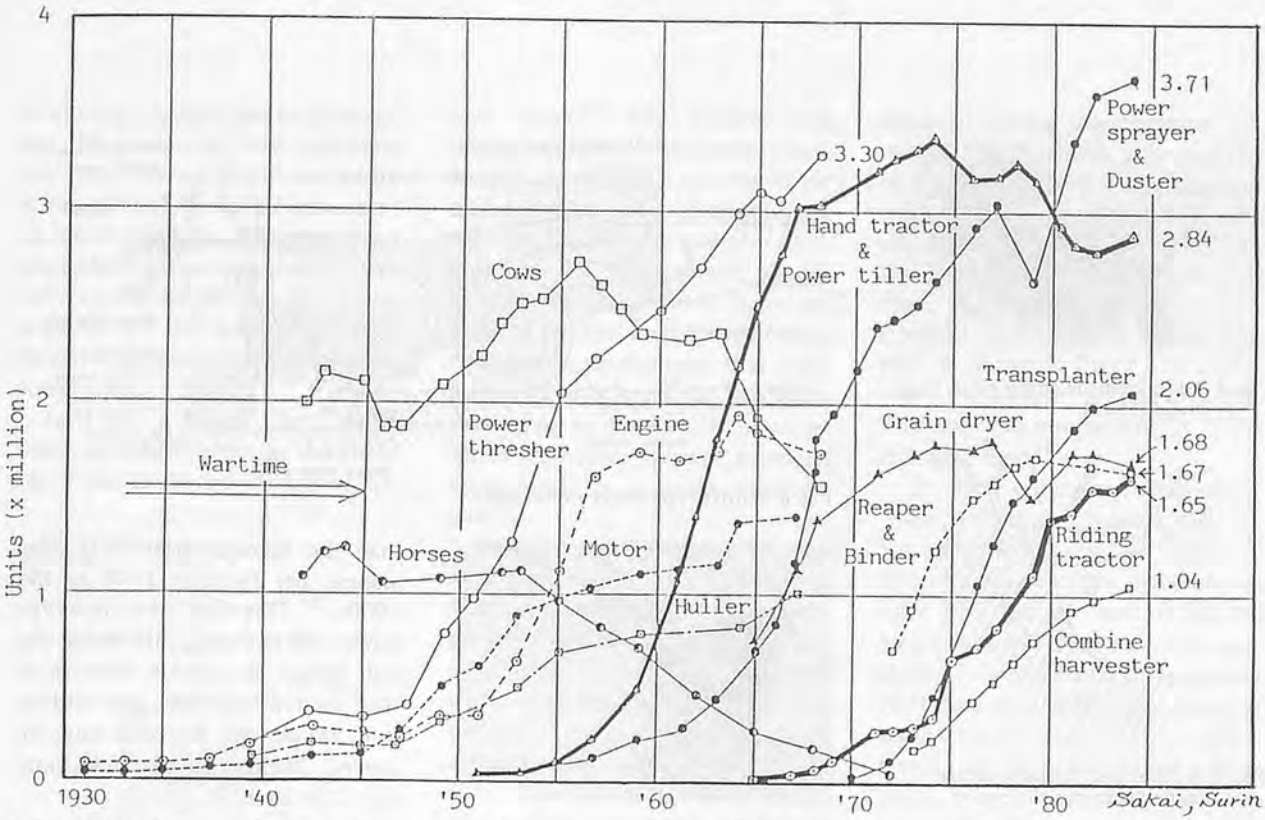

Fig. 2 Historical trends of major farm machinery. Source: Statistical Yearbook of Ministry of Agriculture, Forestry and Fishery.

Fig. 3a A rotary power tiller, Simar brand (1929).

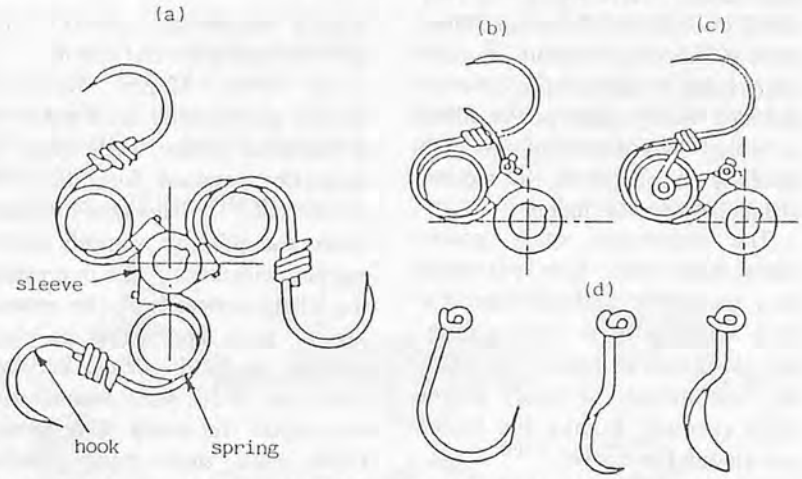

Fig. 3b Working set with spring tines (by H. Bernacki): a) three-tooth set; b) spring tine with guide; c) reinforced spring tine; d) various hooks of teeth.

ization in Japan, illustrated in **Fig. 2**, may be broken down into three as follows:

I. Prior to 1955: Animal-powered farming period

II. 1955 to 1970: Walking-mechanization period

III. 1970 to date: Walking- and riding-mechanization period, with the latter being gradually emphasized.

These stages can be divided further into four distinct periods in an effort to understand clearer the underlying factors behind each stage. These are: I. Period of Initiation; II. Period of Economical Hand Tractors; III. Period of Diffusion of Hand Tractor and Emergence of Riding Tractors; and IV Period of Continued Diffusion of Hand Tractors and Riding Tractors.

I. Period of Initiation, 1920-50

During this period, the design and development of basic models of hand tractors with rotary tillers began to appear to replace animal power in tilling operation and transportation. Bettween 1920 and 1921, there were importations of 12 units of "Simar" brand of hand tractors equipped with rotary tillers from Switzerland[3] (**Fig. 3-a**)[5]. The rotary tillers were installed with spring tines of Meyenburg type as shown in **Fig. 3-b**, patented in 1910 in Switzerland. These machines were effective in shallow soil tillage for small field lots of upland farming. Therefore, they were found ineffective in cultivating the paddy fields because of low perfor-

Fig. 4 A locally-made power tiller, Fujii brand (1932).

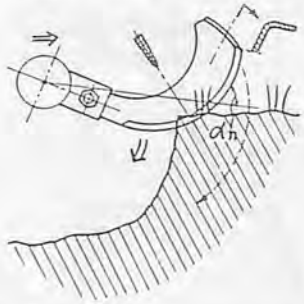

Fig. 5 A developed Japanese rotary blade "nata-zume".

mance of their tilling devices and insufficient trafficability of the wheel mechanism. Those machines, however, brought about a great stimulation to initiate the development of locally-made power tillers in Japan. As a matter of fact, the Simar is considered as the mother of Japanese power tillers.

The prototype rotary power tillers that were later patterned after the Simar carefully tested for their adaptability to various farming conditions in Japan. By 1926, the first models of rotary power tillers (Maruni, Kosaka and Itano) appeared in the market.[3][4]

Between 1930 and 1940, many power tillers were installed with heavy and low-speed kerosene engines of 2.5 to 5 hp. For example, Fujii power tiller (Fig. 4) was one typical model of those machines that appeared in 1932.[5] Those machines were effective in soil preparation or inter-row cultivation in upland fields and were popular for use as power sources to drive stationary farm machines. Later on these machines were used for puddling in submerged paddy fields but failed because of poor

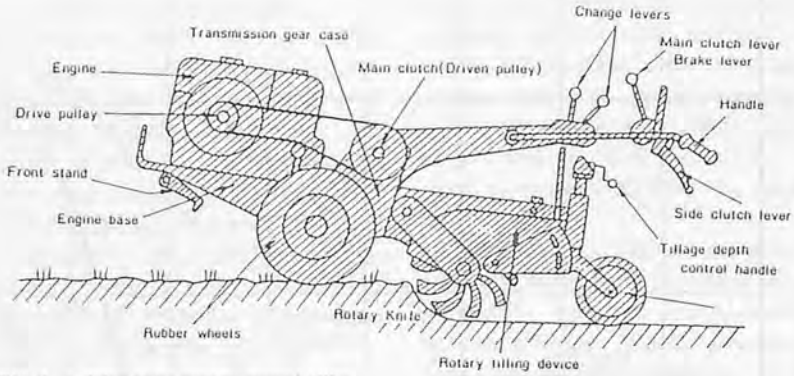

Fig. 6 A drive-type rotary power tiller.

Fig. 7 An imported motor tiller "Merry Tiller", 1952 (by Mr. Kawabe).

sealing technology against water and mud and poor trafficability.

In 1940, Messrs. Kumaichi Honda and Rinsaku Satoh patented a Japanese rotary blade (Fig. 5) originally designed for tilling wet paddy soil.[3][6] This type of rotary blade was effective not only in tilling performance but also in preventing tilling devices from the entwining of grass and straw as plant residues in paddy fields. Between 1945 and 1950, some manufacturers started to equip their power tillers with such rotary blades. Moreover, big iron-lugged wheels and rubber tires were also developed in order to improve manoeuvrability.

In time, these machines were installed with water-cooled diesel or kerosene engines of 5 to 10 hp. They were then called "drive-type power tiller"[7]. They were heavy and expensive.* The prices of such machines were somewhat higher than the average agricultural gross income per farm in 1940 to the 1950s.[8] Therefore, the drive-type power tillers during this period did not diffuse so quickly because of the limited market and utilization among the few rich and advanced farmers who had more than 2 ha land.[8]

Toward the end of 1948, the population of draft horses and cattle was equivalent to 1 450 000 hp while that of tractor power was only 30 000 hp.[9] This means that up and until this time paddy fields in the majority farms of small landholdings were still cultivated mainly by animal power.

II. Period of Economical Hand Tractors, 1950-60

This period marked the initial development of economical hand tractors with modern plows. Between 1953 and 1955. The expensive rotary power tillers became workable for puddling in submerged paddy fields because of the improved sealing mechanisms against water, dust and oil. In order to assure bank loan repayment for such expensive rotary power tillers, they were rented out for rough tillage to other farmers.** Such heavy work of the machines required not only durable mechanism but also high working performance. These resulted in greater advance-

*A unit sold between ¥200 000 and ¥300 000 or US$560 and US$833 at which time the exchange rate was ¥360:US$1.00.

**In 1955, the cost of tilling a hectare of rice land was betweeen ¥8 400 and ¥10 610 (US$23-US$29)[10].

ment of the power tiller mechanism, and the power of these machines was gradually increased to 14 hp in the 1950s. The development of machines bigger than 14 hp was not successful because of handling difficulty caused by too big and heavy structure of the machine. **Fig. 6** shows a general drive-type rotary power tiller.

In 1952, a motor tiller, Merry Tiller in brand name, as shown in **Fig. 7** was imported from the USA into Japan.[3] The machine was simply equipped with drum rotors, instead of wheels, on the drive shafts and driven by 2.5 hp gasoline engines. These tillers had also some problems in their power to till paddy soils in Japanese farms because of relatively short-lived design and simple mechanisms that were suited to the American gardening conditions in domestic hobby use. These machines, however, provided great hints to Japanese engineers later.

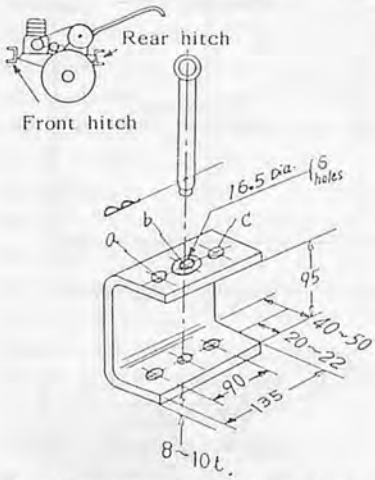

Fig. 8 The standard hand-tractor hitch and pin in Japan.

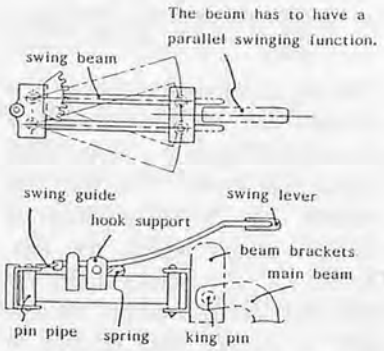

Fig. 9 An illustration of swing-beam mechanism.

Fig. 10 An improved Merry Tiller with a Japanese turn-wrest plow, 1955 (by Mr. Kawabe).

Mr. Yoshio Minowa and his engineer staff, Mr. Hisao Kawabe, in Saiousha Company started to improve the American-made tiller with many ideas, and collaborated with the Matsuyama Plow Manufacturing Company to attach a Japanese traditional plow to the tiller. They tried to utilize special adaptability of Asian traditional plows to the hand tractors. They developed a Japanese turn-wrest plow (a kind of simple reversible plow) and mounted it on the Merry Tiller type tractor with rubber tires instead of a rear-skid and drum rotors.

Between 1952 and 1954, original ideas of giving idle-clearance between the plow hitch yoke and the machine hitch, depth-adjusting and swing-beam with width-regulating mechanisms were successfully developed.[3] These mechanisms were improved and have become standard mechanism of hitches and pins as shown in **Fig. 8** and swing-beam mechanism as shown in **Fig. 9** as valuable innovations in 1950s in Japan, too.[11]

In 1953, the improved Merry Tiller started to be distributed by Saiousha Company in Japan.[3] The retail price of the machine was only ¥85 000 per unit (US$236) which was less than a half to one-third of the price of a rotary power tiller, and almost the same price of an excellent draft animal. Afterwards, the farmers required a little more powerful drafting performance. **Fig. 10** shows the improvement of a Merry Tiller of 3 to 4 hp engine with a Japanese turn-wrest plow. This ensured the appearance of economical hand tractors with plows that could replace animal plowing on the majority of farms. Since 1955, many local manufacturers developed new types of such

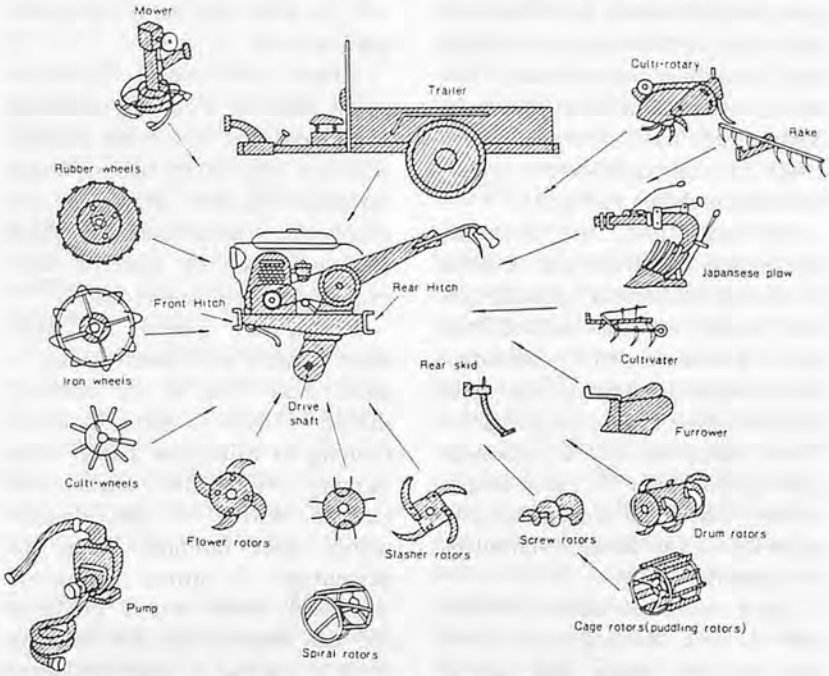

Fig. 11 Development of multipurpose hand tractor with attachments.

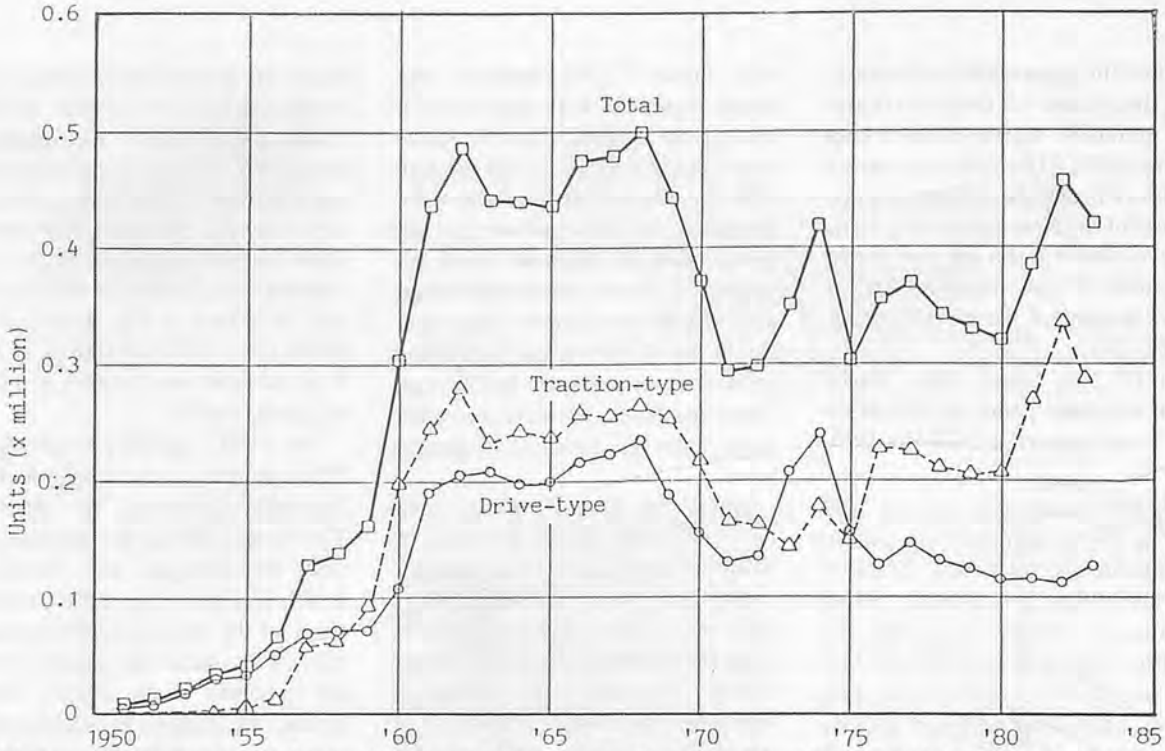

Fig. 12 Annual production of hand tractor in Japan classified by types. Source: Statistical Yearbook of Ministry of Agriculture, Forestry and Fishery.

tillers or small hand tractors installed with 3 to 5 hp of air-cooled gasoline engines, and their prices were about ¥100 000 per unit (US$ 277). With such a perfect hitching mechanism between the tiller and the turn-wrest plow, it became possible to make other attachments. This machine could be used not only for plowing and puddling but also almost any necessary farm works with various kinds of attachments, developed from 1952 to 1960 by many attachment manufacturers as shown in **Fig. 11**.[7]

At this time, the Japanese farmer felt that there was no need to change traditional plowing system based on the animal-draft plow. Afterwards, many manufacturers began to develop the same kinds of tillers of 3 to 5 hp engines. These tillers are called "traction-type power tiller"[7], and simply called "tiller" in Japanese. The majority of the farmers started to purchase the tillers.

As a result, the annual production of the traction-type power tiller became higher than that of the drive-type power tiller after 1959 as shown in **Fig. 12**. The best selling models of traction-type power tillers were equipped with air-cooled 3 to 4 hp gasoline or kerosene engines. Their effective field capacity was about double of a draft animal at that time. **Fig. 13** shows a typical small hand tractor with a more advanced turn-wrest plow in 1965.

From 1959, small drive-type power tillers of 5 to 7 hp were also developed that could be coupled with not only rotary tillers but also Japanese modern plows, as exchangeable attachments. These medium types of machine were called "dual-type power tiller"[7]

During this period, the large-scale farmers with landholdings of more than 2 ha as the minority shifted from animal-powered farming to drive-type power tiller farming while the smaller-scale farmers shifted to traction-type power tiller farming. When the percentage of farmer population decreased, there was a tendency for the farmers to shift little by little to the use of bigger machines of higher working efficiency.

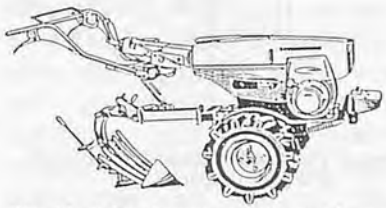

Fig. 13 A hand tractor with a modern turn-wrest plow (export model), 1965.

During this period a tractor performance test was established by a governmental agency coupled with a bank loan system. The loan was available only for the purchase of machines which passed the test. Therefore, all manufacturers of hand and riding tractors became eager to remake their tractors in order to pass the test and the bank loans became popular among farmers.

III. Period of Diffusion of Hand Tractors and Emergence of Riding Tractors, 1960-70

During this period, the hand-tractor was rapidly promoted and the number of power tillers remarkably increased from 80 000 units in 1960 to more than 3 000 000 units by 1970.

While the power tillers were becoming popular, the draft animals were fast giving way from 1955 to 1970 as they were being replaced by drive-type and traction-type power tillers coupled with rotary tillers and modern plows, respectively. The draft horse disappeared altogether from statistics in 1972 and the draft cattle were replaced by dairy and beef cattle.

In time, many developing countries in Asia investigated Japan's successful mechanization in the 1970s, and selected mainly the powerful hand tractors or power tillers of 7 to 14 ps for their mechanization due perhaps to the tillage working efficiency and fuel consumption problem. (Gasoline fuel is more costly than diesel fuel, and fuel expenses of 3 to 4 hp gasoline engines are almost the same as those of 7 to 10 hp diesel engines). However, in Japan in the 1960s to the 1970s, they had a solution to this problem, i.e., the development of a dual-fuel carburetor system the engine of which could be started by gasoline and then changed to kerosene fuel after a few minutes when the engine becomes hot. (The price of kerosene at that time was almost the same as diesel fuel price). Those kinds of engines are still produced by Mitsubishi Heavy Industry and IHI-Shibaura Machinery Companies.

In addition to the booming diffusion of hand tractors, the intensive farming in greenhouses for the fresh vegetable and fruits market began to be popular in Japan in 1965. This kind of farming initiated the appearance of "Mini-tiller" of 1.5 to 2.5 hp designed for shallow soil tillage in narrow spaces between rows and light transportation, etc.[9] In order to cover all kinds of farm works throughout the cropping season, some farmers began to have two types of power tillers.

In 1961, the country's Agriculture Basic Law was enacted. For the riding tractors, governmental discussions at that time concluded that about 20 to 30 hp riding tractors might be the most appropriate models to mechanize paddy fields. Since several manufacturers started to develop such sizes of tractors, there were rear-wheel-drive tractors of 15 to 30 hp appearing in the market in 1960s. Those tractors, however, were suitable only to large-scale farms or a limited number of cooperative use so that they did not become popular among the majority farms of small landholdings.

But the Toyosha Company that had a different opinion from the governmental recommendation and developed a miniature riding tractor of only 6.3 hp for drafting a modern Japanese plow as shown in **Fig. 14**. Afterwards, this tractor was further developed within two years and became a series of 11 to 13 hp tractors coupled with Japanese plows of one or two bottoms or small rotary tillers. The retail price of such riding tractors was about ¥350 000 to ¥600 000 (US$ 972 to $1667) per unit.[12]

These sizes of tractors were accepted (to be suitable) for the farms of 1 to 2 ha so that they became the best-selling models of riding tractors from 1966 to 1968. Japanese plows were again effective to assist the booming start of riding tractors at that time. Other manufacturers also developed such small riding tractors of less than 15 hp leading the first booming stage of riding-tractorization (**Fig. 15**).[12]

Small riding tractors were widely and gradually used among farmers whose landholdings were more than 1 ha while the majority of family farms whose landholdings were less than that still used drive-type and traction-type power tillers in 1960s.

IV. Period of Continued Diffusion of Hand Tractors and Riding Tractors

Between 1974 and 1975, the

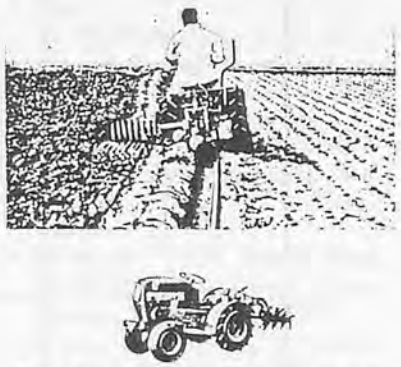

Fig. 14 A miniature four-wheel tractor (2-WD) in 1960. Courtesy of Shin-Norinsha Co., Ltd.

Kubota Company of Japan developed a series of small tractors (9 to 11 hp) of four-wheel-drive type. These types of tractors were well recognized by farmers in wet soil paddy fields because they achieved remarkably better driving stability and trafficability than the rear-wheel-drive ones in rotray tilling work which produced tilling resistance in the opposite direction from plowing resistance.

This means that in contrast to the wide upland fields, small, narrow paddy fields naturally required small but efficient tractors and implements, hence many new mechanisms in Japanese small riding tractors were developed, not only for high working performance but also for convenient operation in all necessary farm operations such as shifting gears of transmission through synchromesh or power shifting gear mechanism, high-lug or wide-lug rubber tires for soft soil of paddy fields; special steering mechanism of shorter turning radius; three to four shifting gears for PTO-shaft, including 540 and 1 000 rpm as an international standard; Japanese three-point linkage hitch for the optimum operation of rotary tillers; electronic and new controlling systems for three-point linkage hitch. Those were all developed keeping local farming structures and paddy field conditions in mind.[12]

In 1975, 17 hp tractors, includ-

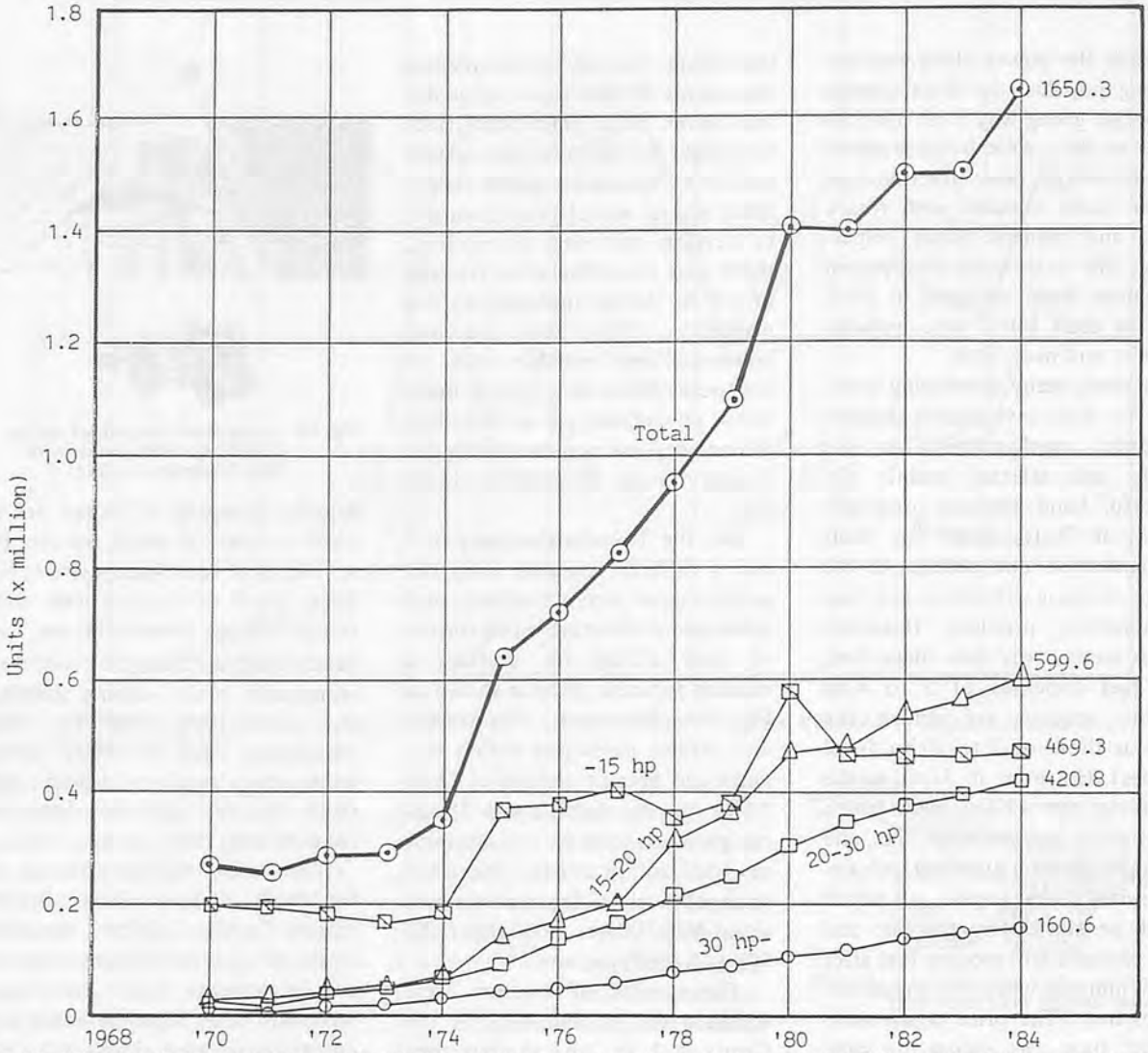

Fig. 15 Diffusion of riding tractors classified by horsepower on farms in Japan. Source: Statistical Yearbook of Ministry of Agriculture, Forestry and Fishery.

ing four-wheel-drives, started to appear due to the decreasing percentage of population engaged in agriculture among the economically active population in Japan. It decreased from 32.9% in 1960 to 21% in 1970 and less than 10 percent at present.[13] The change in farm population structure in the country meant more farmers being engaged industrial activities. The increase in the number of riding tractors might be due to other favourable factors such as increase in annual income per family farm with additional income from side jobs in industrial sectors, because of shorter working time in agriculture. Effective loan and subsidy system from government to farmers and farmers' cooperatives were also effective. Consequently, the number of power tillers began to decrease a little in 1974 but has been going up again since 1982. There were about 1.65 million units of small riding tractors and 2.84 million units of power tillers among 4.6 million farm families in Japan in 1984.[12] Tractorization in Japan is now shifting to the stage of less than 30 hp tractors but currently being mostly dominated by tractors of the 15 to 20 hp class. Tractors bigger than 30 hp are still small in number as they are used mainly in upland farming and by cooperatives.

Conclusions

Within only 15 years from 1955 to 1970, most Japanese small-scale family farming as the majority were completely shifted to mechanized ones by power tillers with modern turn-wrest plows or rotary tillers. The technical process of the smooth shifting from animal-powered farming to mechanized one is discussed, and the tractorization is divided into four periods as follows:

1) The first period (1920-1950): The initial development of hand tractors with rotary tillers. Rotary power tillers were imported into Japan as sample machines to be evaluated in local

farming conditions. Although they were developed to be 7 to 14 hp machines within 20 years, their diffusion was not progressive, because those heavy machines were so expensive to the majority of family farms that only the minority of more than 2 ha farming could afford them. Furthermore, they were used only for tillage and transportation.

2) The second period (1950 – 1960): The initial development of economical hand tractors with modern plows. The simple motor tillers for shallow soil tillage in U.S.A. domestic gardens were imported into Japan. These machines were improved and adapted in order to couple with Japanese turn-wrest plows. Those tillers of 3 to 5 hp were not only low price machine but also had effective multi-purpose performance with various attachments, and farmers did not need to change traditional farming methods based on animal-power. Therefore, the diffusion of such economical hand tractors was remarkably boosted after 1959 by the majority as family farms of less than 1 ha, while the rotary power tillers were used by only the minority at that time. Power tillers of medium size, 5 to 7 hp, were also developed in this period.

3) The third period (1960-1970): The booming diffusion of hand tractors and the initiation of riding tractors. The number of small hand tractors rapidly increased among the majority of family farms over the country without giving great strain to the national social structure. Moreover, the problem of more expensive fuel consumption of the gasoline engine than the diesel engine was solved by the diffusion of the high-octane kerosene engines. The draft animals disappeared in 1970. Thus, the modern turn-wrest plows had an important contribution in the primary establishment of such a steady agricultural mechanization.

In the latter half period, manufacturers were producing small four-wheel tractors (18 to 25 hp). However, their diffusion was weak. Among them, miniature riding tractors of 11 to 13 hp with modern turn-wrest plows were developed and suddenly became the best-selling models in 1966 to 1968, because such tractors could not be afforded by individual farmers whose landholdings were more than 1 ha.

4) The fourth period (1970 to the present): The further diffusion of riding tractors with hand tractors. In the beginning of this period, a number of those miniature tractors gradually increased until 1975. When a series (9 to 15 hp) of miniature four-wheel-drive tractors with rotary tillers were developed, the diffusion of riding tractors was remarkably promoted. In order to develop small but efficient tractors, many special mechanisms different from European tractors were developed under local paddy field conditions. At present, Japan is shifting to the use of bigger riding tractors (less than 30 hp), mainly owned by individual family farms.

Asian farming principles of paddy fields and plow science are different from Western ones of upland fields, and these will be discussed in the following issues.

REFERENCES

1. FAO 1970. Analysis and International Comparison of the Results, World Census of Agriculture, pp. 271-272.
2. Sakai, J., 1979. Some Principles of Mechanization Development for Small Scale Family Farmings, AMA, Vol. 10, No. 1, pp. 11-17.
3. Kishida, Y., 1968. Farm Machinery Industry 100 Years, Shin-Norinsha Co., Ltd., Tokyo, Japan.
4. Wada, K., 1979. Kounki-Tanjo (Birth of Power Tiller), Fumin-Kyokai, Tokyo, pp. 108-136.
5. Fujii, Y., 1974. Kokorono-Hashira (My Life Story of Soil Tillage), Seikisha Publishing Co., Tokyo, Japan.
6. Matsuo, M., 1962. Development History of Farm Machinery with Rotating Mechanism, Farm Mechanization No. 2519, pp. 72-77.
7. Sakai, J., Cezar G. Salas Sr., 1973. Conceptional Performance of Japanese Power Tillers and Hand Tractors for Multipurpose Farm Works, AMA, Vol. 4, No. 1, pp. 95-100.
8. Statistical Year Book of the Ministry of Agriculture, Forestry and Fishery, Japan, 1925-1984.
9. Sakai, J., 1973. History of the Development and Classification of Japanese Power Tillers and Hand Tractors of Multipurpose Performance, AMA, Vol. 4, No. 1, pp. 89-94.
10. Ministry of Agriculture and Forestry, 1955. Annual Survey Report of Commodity Prices and Wages in Agricultural Villages, pp. 60-61.
11. Sakai, J., 1984. Technological Characteristics of Japanese Animal-Drawn Ploughs for Mechanizing Small Farms, National Symposium of Machinery for Agriculture, The Institute of Engineers, Sri Lanka, pp. 8-13.
12. Sakai, J., 1984. Technological Reviews of Mechanizing Japanese Small Farms for Tractorization with Field Equipments, The International Seminar on the Efficient Farm Mechanization of Small Farms, KSAM & FFTC/ASPAC, Korea, pp. 4-21.
13. Calculated from, Ministry of Agriculture, Forestry and Fishery, Japan Statistical Year Book 1984, p. 151.

Effect of Restrained Linkage-Geometry on Tractor Performance

by
Jan Mohammed Baloch
Asst. Prof.
Faculty of Agric. Engg.
Sind Agric. Univ.
Tandojam, Sind, Pakistan

Sheruddin B. Bukhari
Assoc. Prof.
Faculty of Agric. Engg.
Sind Agric. Univ.
Tandojam, Sind, Pakistan

A.Q.A. Mughal
Assoc. Prof.
Faculty of Agric. Engg.
Sind Agric. Univ.
Tandojam, Sind, Pakistan

Ali Nawaz Mirani
Lecturer
Faculty of Agric. Engg.
Sind Agric. Univ.
Tandojam, Sind, Pakistan

Introduction

Maximum agricultural production can be obtained with appropriate design consideration and management of farm machines. The invention of restrained linkage has increased the work rate as compared with un-restrained linkage. The height of lower links from ground level has greater effect on tractor performance. The convergence of the lower links and top link forms virtual hitch point. The amount of weight transfer that increases the tractive effort is subject to the height of the virtual hitch point. The higher the virtual hitch point and smaller the wheel base, the greater the weight transfer. The virtual hitch point can be raised by raising the lower link points or by lowering the top-link point and vice versa. Tractive ability increases or decreases as the weight transfer and weight addition increase or decrease. Excess of these two components results in the overturning of the tractor rearwards (Worthington 1949) which can be avoided by having appropriate design of restrained linkage. The optimum height of virtual hitch point can solve this problem.

The following parameters were studied to optimize the height of virtual hitch point:
1) Dynamic weight of rear wheels of tractor; 2) Rolling resistance; 3) Gross tractive effort; 5) Coefficient of traction; 6) Weight transfer; 7) Slip; 8) Velocity; and 9) Drawbar power.

Materials and Method

The materials used in the study were:
1) Leyland 425 tractor; 2) Tractor for towing Leyland 425 tractor; 3) Two-furrow mouldboard ploughs; 4) Weighing bridge; 5) Statimeter; 6) Stop watch; 7) Towing chains; 8) Surveyor's tape; 9) Rule (30 cm); 10) Ranging poles; and 11) White chalk.

The test field was selected at the farm of the National College of Agricultural Engineering at Silsoe, Bedford (U.K.). Two heights of lower links were selected for study purpose. The first height from ground level was 540 mm and the second height was 635 mm. Non-slip and slip distances were recorded to calculate the slip for both positions of links. A statimeter was attached with the front axle of the test tractor to record the rolling resistance and gross tractive effort. The pull was calculated from the formula:

$$\text{Pull} = (\text{Gross tractive effort}) - (\text{Roling resistance})$$

The front and rear wheel reactions of the tractor were recorded under both static and dynamic situations. The centres of gravity of tractor and plough were also recorded. A stop watch was used to record the velocity of the tractor while ploughing. Thus the data obtained were utilized to calculate weight transfer, coefficient of traction and drawbar power.

Notations

Wt =Weight of the tractor
WI =Weight of the implement (plough)

R_F stat = Front wheel reaction (static situation)
R_R stat = Rear wheel reaction (static situation)
O = Virtual hitch point
Wb = Ballast weight
R_F = Front wheel reaction (dynamic situation)
R_R = Rear wheel reaction (dynamic situation)
R = Rolling resistance
Hmax = Gross tractive effort
H = Net tractive effort
WT = Weight transfer
D = Pull
L = Wheel base
d = Depth of ploughing
h = Height of virtual hitch point
CGt = Centre of gravity of tractor
CGI = Centre of gravity of implement (plough)
Vs = Vertical soil reaction
a = Distance between the centre of gravity of tractor and centre of rear axle of the tractor
DWR = Dynamic weight ratio (coefficient of traction)
dbp = Drawbar power
V = Velocity of the tractor while ploughing
b = Distance between the centre of rear axle of tractor and the centre of gravity of the implement

Results and Discussion

Centre of Gravity of Tractor

The centre of gravity of the tractor is the point at which the total weight of the tractor (Wt) may be considered as acting (Fig. 1). Since tractors are composed of many comparatively, irregularly shaped parts, it is rather difficult to analytically find out the centre of gravity of an assembled tractor. However, the centre of gravity may be easily located experimentally. The suspension method and weighing method are mostly used for wheel type tractors. The former method is somewhat cumbersome, hence the weighing method was used to locate the centre of gravity of the test tractor. The following results were obtained:

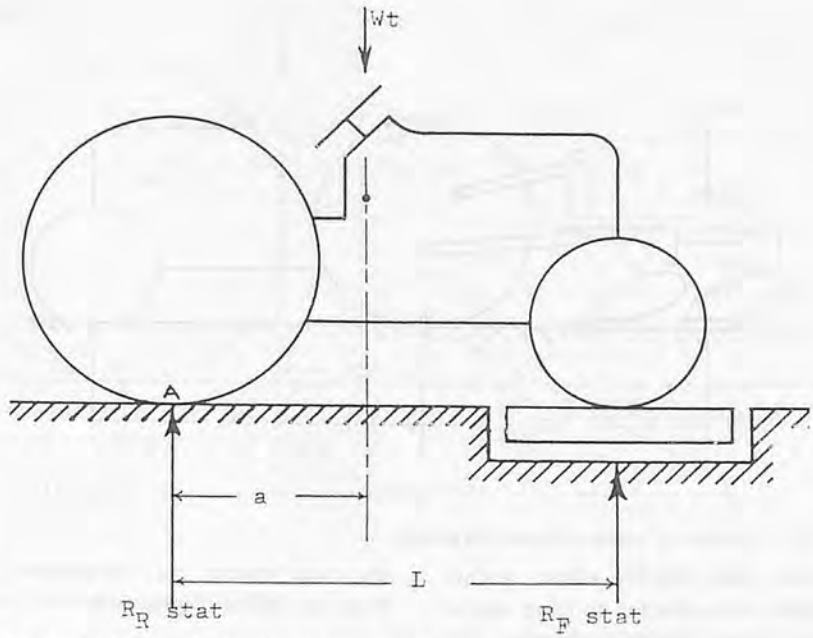

Fig. 1 Weighing method in locating center of gravity.

Weight of front wheels R_F state = 4485 N;
Weight of rear wheels R_R stat = 7974 N;
Weight of tractor Wt = 12 459 N;

Wheel base L = 1 640 mm; and the centre of gravity was determined from the following equation:

$$a = \frac{R_F \text{ stat} \times L}{Wt} = \frac{4\,485 \times 1\,640}{12\,459}$$
$$= 590 \text{ mm}$$

Weight of Implement

The test implement was attached with the tractor and then raised with a hydraulic system. The front and rear wheels of the tractor were weighed on weighing bridge and the following results were obtained:

R_F stat = 2 536 N;
R_R stat = 12 085 N;

The weight of the implement was determined from the following equation:

R_F stat + R_R stat = Wt + WI;
2 536 + 12 085 = 12 459 + WI;
and
Hence WI = 2 162 N

Centre of Gravity of Plough

The centre of gravity of the plough (Fig. 2) was needed for determining the front and rear wheel reactions under dynamic situation; and it is was determined from the following formula:

R_F stat x L = Wt x a - WT x b;
and
2 536 x 1 640 = 12 459 x 590 – 2 162 x b;
Hence b = 1 476 mm

Gross Tractive Effort

The gross tractive effort is the driving force developed by the traction device. In order to deter-

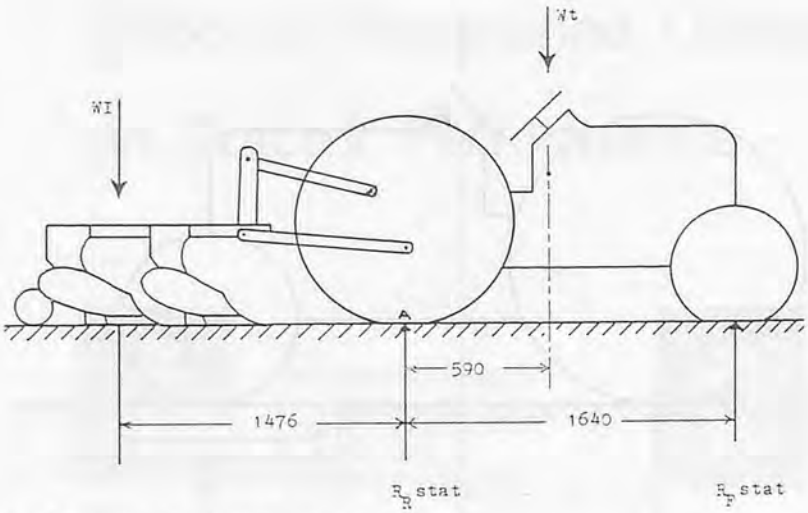

Fig. 2 Location of center of gravity of plough.

mine gross tractive effort, a statimeter was attached to front axle of the tractor during both trials. The gross tractive efforts in the first and second trials were 7 500 N and 8 000 N, respectively.

Rolling Resistance

Rolling resistance is the force required to move the tractor on the plane ground without load. Among the various factors that affect the rolling resistance is the rolling friction between the wheel and the supporting surface. This contributes to a preponderant degree and characterizes the variation in rolling resistance with the changes in the non-uniformities of the wheel and those of the supporting surface. In order to determine the rolling resistance of the test tractor, a statimeter was attached to front axle of the tractor during motion without load. The rolling resistance recorded from statimeter during both trials was 1 500 N.

Drawbar Pull

Drawbar pull is the total force exerted by the prime mover on the implement. Pull characteristics of the driving wheel defines both the magnitude and efficiency of tractor performance. The drawbar pull of the test tractor was determined from the following equation:

$$D = Hmax - R$$

The drawbar pulls recorded during the first and second trials were 6 000 N and 6 500 N. respectively.

Vertical Soil Reaction

The mouldboard ploughs attached to the restrained linkage always experience vertical soil reaction. In sandy soils it is downward and in clayey soils it is upward. The vertical soil reaction was determined from the force diagram (Fig. 3). When the force diagram was completed, the resultant force F did not pass through the virtual high point but instead passed slightly above the virtual hitch point. The resultant F' passed through the virtual hitch point. In the force diagram the distance between F and F' was measured with a scale and the downward soil reaction was 300 N. The greater the downward soil reaction, the greater the traction.

Front and Rear Wheel Reaction under Dynamic Situation

The dynamic weight of the rear wheels was used to determine the coefficient of traction and was determined by taking the moments about A (Fig. 3). The dynamic weight of the front wheels during first trial was determined from the following formula:

$$R_F \times L = WT \times a - Vs \times b - WI \times b + D \times \frac{d}{3}; \text{ and}$$

$$R_F \times 1\,640 = 12\,459 \times 590 - 300 \times 1\,476 - 2\,162 \times 1\,476 + 6\,000 \times 106$$

$$R_F = 2\,118 \text{ N};$$

The dynamic weight of the rear wheels during first trial was determined by resolving the forces vertically as follows:

$$R_F + R_R = Wt + WI + Vs;$$

$$2\,118 + R_R = 12\,459 + 2\,162 + 300;$$

$$R_R = 12\,803 \text{ N}.$$

In the second trial a ballast

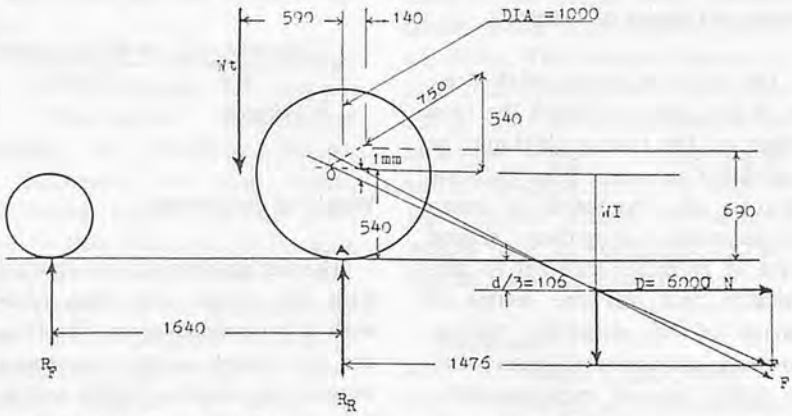

Fig. 3 Graphical method of predicting vertical soil reaction.

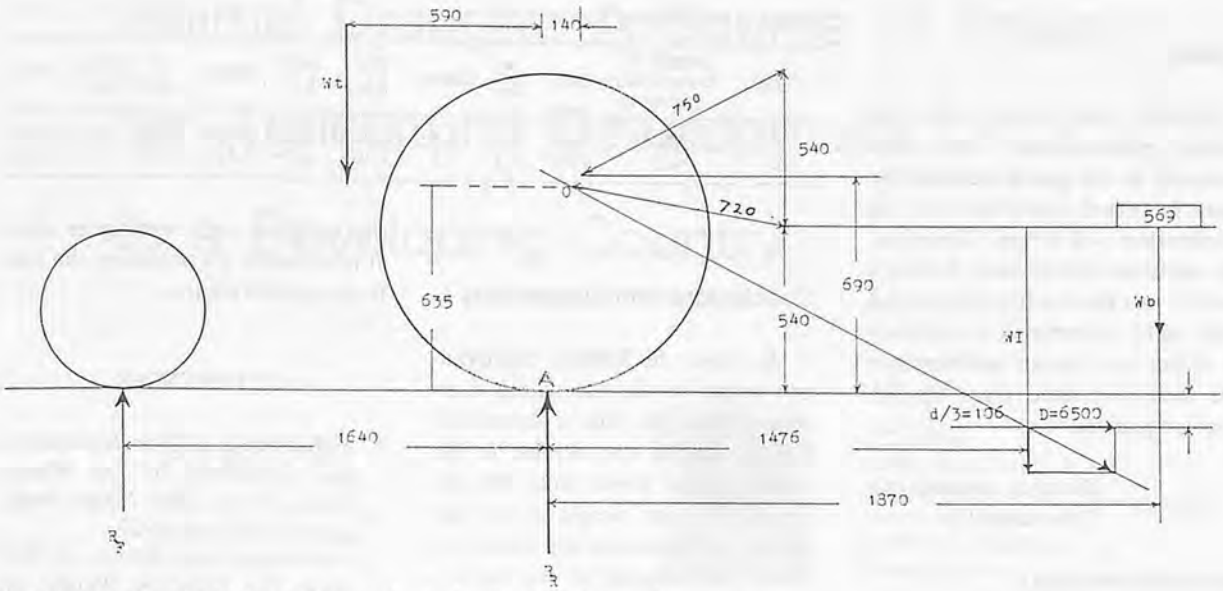

Fig. 4 Graphical method of predicting resultant of soil and implement forces.

weight of 569 N was placed on the implement. From the force diagram (Fig. 4) it was found that there was no downward nor upward soil reaction due to the ballast weight. However, the moments were taken in this situation about point A to determine the dynamic weight of the front and rear wheels. The following equations were used:

$R_F \times L = WT \times a - WI \times b - 569 \times 1\,879$;
$R_F \times 1\,640 = 12\,459 \times 590 - 2\,162 \times 1\,476 - 569 \times 1\,870$;
$R_F = 1\,887$ N.
Resolving the forces vertically,
$R_F + R_R = Wt + WI + 569$;
$1\,887 + R_R = 12\,459 + 2\,162 + 569$; and
$R_R = 13\,303$ N.

Weight Transfer

Weight transfer characterizes the tractor performance and is subject to the height of the virtual hitch point from the ground level. As a matter of fact, it is the weight that is transferred from the front wheels of the tractor to the rear wheels under dynamic situation; provided the tractor is rear wheel-drive and the implement is rear mounted. If the implement is front-mounted the weight will be shifted from rear wheels to the front wheels of the tractor. The weight transfer was obtained from the following formula:

$$WT = R_F\,stat - R_F$$

In the above equation, R_F stat and R_F are the static and dynamic weights of the front wheels of the tractor obtained after the attachment of the implement raised with the tractor. The weight transfer determined during first and second trial was 418 N and 649 N, respectively.

Coefficient of Traction

Coefficient of traction is used in defining the magnitude level of tractor performance. It is affected by the factors such as soil type and state, moisture content, wheel type, tire inflation pressure and soil distribution pressure. The coefficient of traction (which was 0.5) was determined from the following formula:

$$\text{Coefficient of traction} = \frac{\text{Pull}}{\text{Dynamic weight of rear wheels}}$$

Slip

When a wheel or track moves a tractor with or without an attached load some slip of the traction member occurs. This phenomenon is usually referred to as travel reduction and may be expected to increase with increasing load. The travel reduction for any given load is shown in the following equation:

$$\text{Travel reduction} = \frac{\text{(Advance per wheel revolution with no pull)} - \text{(Advance per revolution with pull)}}{\text{(Advance per revolution with no pull)}}$$

The slips during first and second trials were 25% and 19% and increased as the dynamic weight of rear wheels decreased and vice versa provided the soil type and state was kept constant. Sandy soils and wet soils offer greater slip. Clayey soils offer less slip as compared with sandy and wet soils. The slip can be decreased by decreasing tire inflation pressure on sandy soils and by increasing tire inflation pressure on clayey soils. Cage wheels decrease the slip on wet soils.

Velocity

Velocity has a great effect on tractor performance. The draft increases as the speed increases because increased speed increases the acceleration soil forces. Therefore, the velocities which were 0.46 m/s and 0.5 m/s for the first and second trials were determined to evaluate its effect on tractor performance and were calculated from the following equation:

$$\text{Velocity} = \frac{\text{Distance covered (m)}}{\text{Time taken (s)}}$$

Drawbar Power (dbp)

Drawbar power also indicates the tractor performance and was determined from the following formula:

$$dbp = H \times V$$

During first and second trials it was 2.6 and 3.3hp, respectively.

Table 1 Summary of Results

Trial	Height of lower links (mm)	Slip	R KN	Hmax	R_F KN	Pull KN	DWR	V m/s	dbp hp	WT
1	540	25%	1.5	7.5	12.803	6.0	0.469	0.46	2.6	0.418
2	635	10%	1.5	8.5	13.303	6.5	0.495	0.50	3.3	0.649

Conclusions and Suggestions

As shown in **Table 1**, the dynamic weight of the rear wheels is increased and the slip is decreased. This is due to the increase in the height of the lower links. The increased dynamic weight of the rear wheels and decreased slip result in a better performance of the tractor, which is in agreement with the conclusions of McKibben (1927).

The **Table 1** further indicates that the drawbar pull is also increased as the dynamic weight of the rear wheels of the tractor is increased which is also consistent with the conclusions of McKibben (1928).

It is, therefore, suggested that further investigation may be carried out to locate and even higher virtual hitch point for obtaining the best tractor performance.

REFERENCES

1. McKibben E.G. The Kinematics and Dynamics of the Wheel-Type Tractor. Part 7 Agri. Engg. pp 187-189 July 1927.
2. McKibben E.G. Effect of Pull upon the Effective Weight on Front and Rear Wheels of Farm Tractors. Agril. Engineering 9: 243-245 August 1928.
3. Worthington W.H. Evaluation of Factors Affecting the Operating Stability of Wheel Tractors
   Part 1 Agri. Engg. 30: 119-123 March 1949
   Part 2 Agri. Engg. 30: 176-183 April 1949. ■■

Animal Draught: A Source of Power for Agricultural Development in a Developing Country

by
A. Bola Fashina
Dept. of Agric. Engg.
Faculty of Technology
University of Ibadan
Ibadan, Nigeria

J.C. Igbeka
Reader/Assoc. Prof.
Dept. of Agric. Engg.
Faculty of Technology
University of Ibadan
Ibadan, Nigeria

Abstract

Power source in agriculture is one of the determining factors of the level of agricultural development and stage of mechanization. The use of animal draught can be classified as the intermediate stage of mechanization. This paper examines the advantages and problems of introducing animal draught in the agriculture of a developing country. The net return from 1 ha of groundnut (peanut) farm, using animal draught cultivation was 35.7% higher than the partial motorized power-operated cultivation and about 52% higher than that of entirely manual cultivations. Some of the problems of introducing draught animals include ecological factors like inability of the animals to survive in tse-tse fly-infested parts of the country and shortage of pasture during the dry season.

Introduction

Agricultural mechanization can be briefly defined as any mechanical means that can be enployed in the process of agricultural production. It includes the use of hand, animal and engine-powered implements and machines in the production processing, transportation and marketing of agricultural products. It can be classified into three stages (Fashina, 1976):

(i) Elementary stage – the use of human power only.
(ii) Intermediate state – the use of both human and animal power.
(iii) Advanced stage – complete use of motorized and automated power.

The principal objective of mechanization should be centred at raising agricultural productivity in such a way that the income of farming communities will improve (Kline, et al, 1969). In doing this it should be aimed at making man a more efficient director of power. When man employs only hand tools for agricultural production he acts as a producer of power as well as its director. When man is both the director and producer of power, he is rendered inefficient in his activities as the director of power as his energy is used in meeting the demand for power. Since power is time-rated, a farmer's output can only be measured by the number of hands employed for any farming operation.

This paper examines the potentials of animal draught as a source of agricultural power in developing countries. The advantages and problems involved in introducing animal draught into agriculture are discussed and recommendations made.

Hand Cultivation

In West Africa a family could effectively cultivate about 3 ha of land per annum using hand cultivation (Uzureau, 1973). Also, labour shortage during some operations such as weeding, limits the number of hectares that can be cultivated by a family.

For an efficient agricultural system, the FAO recommended that 0.75kW per ha should be available but in West Africa only 0.02kW per ha is available where only manual labour is used (Davie, 1973). From this, it can be deduced that the use of manual labour will limit the scope of expansion of area cultivated by each family. However, human power will still be keenly reckoned with in agricultural production in West Africa as over 80% of the farm power is being derived from human effort (Kline,

et al, 1969). The use of hand tools has its own advantages in that they are readily available locally, they are inexpensive and very simple to maintain. Therefore, in order to increase agricultural production in any West African country more power is needed on the farm.

Tractorized Power Cultivation

The employment of engine-powered implements and machines which is popularly known as motorization or tractorization is the other extreme of providing power for farming. Tractorization affords a farmer the opportunity of cultivating a large hectarage of farm and also allows good timeliness of operations. However, in developing countries where the greater percentage of farmers own their farms in small holdings ranging from 2 to 10 ha, motorized farming on ownership basis is not feasible. This is so because the type of farming system cannot provide sufficient cash income to pay for the purchase of the tractor and the accessory implements and machines, their maintenance, repair, housing and depreciation. Also, if a tractor is used for only a few hours in a year where holdings are small, the overhead will be high. So, in Nigeria where farm units are too small to provide reasonable amount of work for a tractor, private ownership of tractors and implements by an average Nigerian farmer is not feasible in the next decade. Farmers will still depend on tractor hire services for a long time.

Some engineers have attempted to design and develop small tractors which can work under varying tropical soil conditions, but their efforts were not successful because of the need to develop enough power at the drawbar from a relatively light tractor at a price which the small farmer can afford.

The State Governments in Nigeria have tried to mechanize farming through tractor hiring services at subsidized rates, but the schemes had not been very successful. The reasons for its failure can be traced from the planning process to the execution stage of the programme.

Hence, dependence on motorization in Africa to provide power for agricultural development will likely slow down the pace of progress.

Animal Draught Cultivation

The animal draught cultivation is an intermediary between the use of local hand tools and motorization. It is an exploitation of animal energy to cultivate soils. In regions where the ecological conditions permit large domestic animals to live, animal power is a cheap source of power for farming.

The animal draught cultivation has the following advantages: a) Its practice in West Africa may be a step towards reducing shifting cultivation; b) It can increase the output per man; while also reducing drudgery; c) Its cost is low and always within the capacity of an average Nigerian farmer; d) Timeliness of operation can be achieved through this system; e) The farming system makes it possible for a farmer to cultivate larger areas of land than he could with only hand tools; f) The animal faeces can be used in making farm yard manure for sustaining soil fertility; g) The manufacture of most animal draught equipment is within the competence of local craftsmen or local industries.

Only some specific large domestic animals can thrive in specific echological zones. For instance, cattle do not do well in rain forest zones because of the attack from tsetse flies. So, only breeds of animals which can resist the attack of tsetse flies can be used in such zones. For a better use, the draught animals need special handling. This makes training essential for those who will work with them. Many farmers sell off their work-bullocks during the dry season because of lack of feeds.

Prospects for Animal Draught Cultivation in Nigeria

Animal draught was introduced into Nigerian agriculture in 1922 on a government farm in Daura. Private farmers did not use them for farming operations until 1928 when the number of farmers using animals for cultivation had increased. Research into animal draught cultivation started at the Institute of Agricultural Research, Zaria in 1970 (Musa, 1978).

Animal draught cultivation is popular in the northern parts of Nigeria where soils are light and the incidence of tsetse fly is minimum. In Nigeria donkeys and N'dama bovines are the commonest draught animals.

Animal-drawn Implements

One of the advantages of animal-powered farming is that the implements can be manufactured locally which can lead to reduction in cost of the tools and possible saving of foreign exchange. It makes the implements always available and also provides job opportunities for those working in the industries.

The John Holt Agricultural Engineers in Zaria had developed and manufactured some animal drawn implements which had been found useful. Some of them are strad (which is multipurpose), Emcot rider, Emcot groundnut lifter, Emcot cultivator, and row planter. The strad is very useful in that many operations can be carried out with it when the package is complete such as ploughing, ridging, planting and weeding. The prices of these

Table 1 Prices of Animal-Drawn Implements

Implement	₦*
Strad (multipurpose)	550
Strad attachments	
(a) Seat	30
(b) Seed box	60
Emcot ridger	150
Emcot groundnut lifter	120
Emcot cultivator	150
Row planter	120

* ₦1.00 Nigerian = $1.35 U.S.
Source: John Holt Agricultural Engineers, Zaria. The costs of two work - bullocks, the yoke and the cart necessary to complete the package are not presently available.

implements, as shown in **Table 1**, are not so high as the tractorized implements.

Economics of Animal Draught Cultivation

Time factor is a great hindrance in agricultural production because the time available for work can limit the number of hectares to farm, and to some extent, hence limits yields. Since timeliness factor is a major consideration in agricultural development the FAO (1972) carried out a research to compare the time and cost of cultivation by hand, with draught animals and with motorized power equipment.

Tables 2, 3 and **4** show the difference in working time, depending on the source of power used in groundnut production. **Table 5** which shows the summary, rated each system according to the number of hours needed per ha.

The net return with animal draught cultivation was 35.7% higher than the partial motorized power-operated cultivation, while the entirely manual cultivation was 26.3% less than the partial motorized power-operated cultivation. So, in a developing agricultural system, animal draught cultivation was found to be more economical than the entirely manual or partial motorized power-operated cultivation.

Table 2 Work Rate Using Entirely Manual Cultivation

Cultivation task	Work rate h/ha
Ground preparation (clearing with hand hoe, stacking and burning weeds)	30
Shelling the seed nuts	70
Sowing	60
Hoeing immediately after sowing	35
Other hoeings:	
* first	50
* second	50
* third (rarely carried out but recommended)	35
Manual weeding (large weeds)	20
Lifting (creeping varieties of groundnuts)	60
Gathering and stacking	20
Threshing, winnowing	50
Total	480

Table 3 Work Rate Using Combined Manual and Animal Draught Power

Cultivation task	Time h
Clearing the ground	20
Surface soil preparation	24
Shelling of seed nuts	70
Sowing and fertilizer application	21
Light surface tillage	10
Hoeings (three times)	72
Manual weeding along the rows	20
Lifting	27
Gathering and stacking	20
Threshing and winnowing	50
Total	334

The experiment was carried out with a polycultivator and the following attachable implements: plough, 2-row planter with fertilizer attachment, weeder, spring tine cultivator, and lifters.

Criteria for Successful Introduction of Animal Power

For animal draught cultivation to be successful some demands have to be met.

(a) The animals to be used have to be trained. The training should start when the animals are young. The farmers also should be well trained and informed about the health care and management of the animals. Feeding habits and right feeding-stuffs are essential in introducing animal draught cultivation on a large scale, so the government should place high emphasis on the training programmes for the intended farmers.

(b) Good animal-drawn tools are required for the successful implementation of the programme. This is a challenge to agricultural engineers. The design and development of better animal-drawn tools are of paramount importance to the successful introduction of the programme. Adaptive research into the present tools will be of good contribution to agricultural development.

(c) Since animal draught cultivation is intended for poor farmers, the governments can help by providing credit facilities to interested farmers. The credit facilities may not be direct cash credit, but government can provide tools and necessary training for the farmers.

(d) Cooperation among agricultur-

Table 4 Work Rate Using Partial Motorized Power-Operated Cultivation

Cultivation tasks	Time h
Soil preparation	
* stubble-ploughing	4
* disc-harrowing	1
Shelling seed nuts	70 (manual)
Sowing (4-row planter with fertilizer attachment)	3
Harrowing	3
Hoeing (semi-portable hoe)	4
Weeding by hand along the rows	4
Lifting, putting into rows	4
Gathering and stacking	20 (manual)
Mechanical threshing	14 (12h, manual)
Total	127

Table 5 Summary of Number of Hours Worked per Hectare

Item	Man	Animals	Tractor
Entirely-manual cultivation	480	–	–
Animal-draught cultivation	281	53	–
Partial power-operated cultivation	162.5	–	11.5

al extension services, research institutes and farmers should be promoted to enable a free flow of information among the research institutes and the farmers.

Conclusion

Since the greater part of Nigeria covers the savannah zones where animal-draught cultivation is possible, an exploitation of this inexpensive source of power should increase Nigerian agricultural production substantially.

REFERENCES

Davie, J. (1973): Animal as a source of power. A paper presented at a Conference on Ox-powered Cultivation in West Africa. NIAE Silsoe, Bedford, 8/9 August, 1973.

FAO, (1972): The employment of draught animals in agriculture, Rome 1972.

Fashina, A.B. (1976): Introducing an appropriate agricultural mechanization in a developing country like Nigeria. Agricultural Education Bulletin 2:(1) 14-16. Division of Agricultural Colleges, Ahmadu Bello University, Zaria, Nigeria.

Kline, C.K., Green, D.A.G., Donahue, R.L., and Stout, B.A. (1969): Agricultural Mechanization in Equatorial Africa. Institute of International Agriculture, Research Report No. 6, Michigan State University.

Musa, H.L. (1978): Donkey mechanization: A supplementary power source for agricultural production. Proceedings: Nigerian Society of Agricultural Engineers, vol. 2.

Uzureau, C. (1973): Ox-drawn cultivations in West Africa. A paper presented at a conference on ox-powered cultivation in West Africa. NIAE Silsoe, Bedford, 8/9 August, 1973. ■■

AMA ABSTRACTS AND INDEX, 1971–1980

— A Key to Wealth of Information —

As the AMA enters its 13th year of publication this year, the Editorial Staff deems it appropriate to commemorate the event by publishing "Abstracts and Index 1971-80" in May, 1983 for only ¥2,000 a copy, including sea mail postage.

During the decade 1971-1980, more than a thousand articles were received by AMA from readers and co-editors. Over 600 of these contributions were published from which the abstracts and index in various aspects of agriculture and agricultural mechanization in developed and developing countries were arranged for use as a handy reference by students, government officials, ressearchers and academicians interested in agriculture and agricultural mechanization. For example, at a glance, the abstract and index tell about the content of the article, author and AMA issue number. The publication form is A3 size (18.5 cm x 21 cm) 82 pages.

A limited number of copies are still available for which reason they will be sold on a first-come, first-served basis. In order that interested readers get their copies of the publication, it will be very useful for them (and convenient for the AMA Staff) to fill up the order from inserted in this issue and mail it to –

FARM MACHINERY INDUSTRIAL RESEARCH CORP.

7-2 Kanda Nishikicho, Chiyoda-ku, Tokyo, Japan (Tel. 03/291–5717–8, 3671–4)

Draught Animal Power Potential in North-Eastern Hill Region of India

by
S.D. Sahu
Scientist S-2 (FMP)
Division of Agric. Engg.
I.A.R.I.
New Delhi-12, India

Abstract

The paper highlights the status of power available on agricultural farms in the North Eastern Hill (NEH) Region of India with special reference to draught animals. Though potentially animal power contribution is 64% of the total available farm power in this region, it is discouraging to note that draught animals remain mostly unutilized or underutilized contributing only 11% of the total requirement. Some possible solutions have been discussed to introduce systems for greater usage of aminal power in agriculture in the hilly regions which traditionally depends upon manpower.

Introduction

Draught animals, the main stay of farm power in India, particularly on medium, small and marginal farms are mainly used for i) production and post-production farm operations such as ploughing, harrowing, levelling, sowing, interculture, threshing and processing; ii) farm development; iii) water lifting; iv) transportation, and v) oil extraction. Besides, draught animals are a valuable source of renewable energy providing fuel and manure from their wastes.

In the North Eastern Hill (NEH) region, comprising of the states of Assam, Mainpur, Meghalaya, Nagaland, Tripura, Arunachal Pradesh and Mizoram, agricultural practices differ from those in other parts of the country. Shifting cultivation (jhuming) is still prevalent in the region where human power forms the only source of energy with long work hours and much drudgery. In order to discourage this method of cultivation which causes severe soil erosion, the state governments have taken up various projects on bench terracing on hill slopes for agricultural purposes. There also, the energy input and type of tools used are basically the same as that of shifting cultivation probably because of transition phase. In valley lands and foot hills too, the main sources of farm power are humans and animals. Improved agricultural tools and implements are almost unknown in the region. Farm holdings are mainly marginal and small. Topographical and climatic conditions coupled with poor economic status of farmers have resulted in a heavy dependance on human power for agricultural operations.

Traditional agricultural system in this region, depending mainly on human labour, is in its transition phase towards change to a permanent agricultural system. In some pockets, wherever feasible, farmers are using draught animals with local indigenous implements. However, their use is limited to a few crops and farm operations. Paddy production in low-lying valley lands is done mainly with the use of draught animals in this region. There is a tremendous scope of improving the overall economic conditions of the farmers which may demand an introduction of suitable power machine system with improved package of practices. The use of draught animals with suitable improved implements seems to be an ideal system under this situation since other technologies such as man-machine and improved power-machine systems are not suitable and economically feasible. Unfortunately, not much information on draught animal power and its utilization is available as no effort in the past was made on this aspect. Efforts to develop animal power-machine systems are urgently required now when the overall agriculture is in its changing phase. This paper aims to project an overall picture of the existing draught animal power-machine system in this region and emphasises measures required for its future improvement and efficient application.

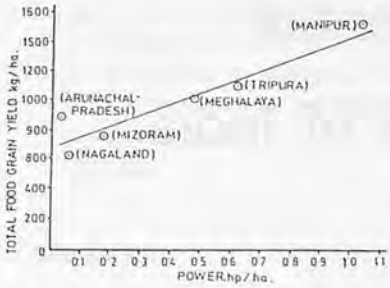

Fig. 1 Yield and power.

Table 1 Available Draught Animal Power in N.E.H. Region

States/union territories	Total power for agriculture (hp)	Power from draught animals (hp)*	Ratio of draught power to total power (%)	Draught power per unit of cropped area (hp/ha)
Manipur	95 366	70 500	73.0	0.47
Meghalaya	116 063	80 500	69.0	0.41
Nagaland	31 783	13 500	42.0	0.13
Tripura	156 716	104 500	66.0	0.29
Arunachal Pradesh	38 296	20 000	50.0	0.15
Mizoram	13 178	1 500	11.0	0.03
Whole region	452 402	290 500	64.0	0.29

*Calculated on the basis of number of heads available (1) assuming that on an average a bullock or buffalo is able to develop about 0.5 hp.

Table 2 Fuel Energy and Manure Potential of Draught Animals in N.E.H. Region

State/union territories	Fresh dung (t/day)	Energy through biogas per day*		Energy through dung cake per day*		Manure (t/day)
		Biogas ('000 *l*)	Useful heat ('000 kcal)	Dung cake (t)	Useful heat ('000 kcal)	
Manipur	1 974	75 012	225 036	494	116 090	474
Meghalaya	2 254	85 652	256 956	564	132 540	541
Nagaland	378	14 364	43 092	95	22 325	91
Tripura	2 926	111 188	333 564	732	172 000	702
Arunachal Pradesh	560	21 280	63 840	140	32 900	134
Mizoram	42	1 596	4 788	11	2 585	10
Whole region	8 134	309 092	927 276	2 036	478 460	1 952

* Calculated from the amount of fresh dung available daily from the draught animals. 1st fresh dung yields $38 \times 10^3 l$ of biogas and 250 kg dung cake. One biogas gives 3 kcal of useful heat and one kg dung cake gives 235 kcal of useful heat (3).

Present Power Status

Not much attention has been paid in the past to asses the power potential of farms, hence it may be difficult to project the actual requirements for draught animal power, in particular, and farm power, in general, in the region. However, preliminary investigation on this aspect have revealed, as shown in **Fig. 1**, that there is a significant correlation between available power per unit area and food grain production in the region (Sahu et al, 1980).

Animals which are used for draught purposes in the region are bullocks and buffaloes. The total power available from these animals is about 0.29 million hp which varies from the lowest in Mizoram (1500 hp) to the highest in Tripura (0.104 million hp) **(Table 1)**.

The contribution of animal power is about 64% of the total power available. A maximum of 73% of the total power available in Manipur is from draught animals but lowest in Mizoram. The average available animal power per unit of cropped area in the region is 0.29 hp/ha: highest for Manipur (0.47 hp/ha) and lowest for Mizoram (0.03 hp/ha).

Fuel and Manure Potential

Animals on the farms are commonly used for performing various coperations whereas their wastes are used for preparing manures for crops and producing bio-gas and dung cakes for heating and cooking purposes. Thus, draught animals are not only a source of power to the farms but also a very good source of renewable energy. As shown in **Table 2**, the fresh dung output is about 8134 t which gives about $309 \times 10^6 l$ of bio-gas (927×10^6 kcal) or 2036 t of dung cakes (479.5×10^6 kcal) per day. The quantity of available manure per day comes to about 1952 t in region. The State of Tripura receives the highest total amount of fuel and manures per day whereas Mizoram receives the least.

Present Use of Draught Animals

The use of draught animals in the region is very limited because of difficult topographical and agro-climatic conditions. Local implements such as desi plough for ploughing, wooden ladder for levelling and clod breaking, wooden peg harrow for interculture and the local cart for transportation are the only implements using draught power. Survey results on requirements of total power and percent contribution by draught animals for raising two paddy crops annually in Meghalaya under valley land conditions is shown in **Table 3** and **Fig. 2**.

It is quite discouraging to note that of the total power requirement of 754.2 hp-h/ha-yr, the contribution of draught animals is only 11%. Operations which require the use of these animals are seed bed preparation, either for raising seedlings or for preparing main lands, and threshing of paddy. Besides, data on the monthly use of draught animals **(Fig. 2)** shows

Table 3 Percent Contribution of Draught Animal Power for Paddy Crop in Valley Lands

Farm operation	Total power requirement	Contribution of draught animal power to total	
	(hp-h/ha/yr)	(hp-h/ha-yr)	(%)
Seedling production	56.3	11.6	20.0
Seed bed preparation	289.2	65.9	22.0
Transplanting	135.2	–	–
Irrigation & water management	19.4	–	–
Weeding	100.2	–	–
Harvesting	79.9	–	–
Transportation	19.4	–	–
Threshing	54.6	9.7	7.0
Total	754.2	87.2	11.0

that for most of the periods they remain unutilized or underutilized.

Problems and Possible Solution

From the preceding discussion it is seen that though the quantum of draught power that is contributed to the total available farm power in the region is quite high, its actual use on the farm is actually very limited. The reasons may be attributed to: (a) continuation of age-old methods and practices of cultivation and (b) non-availability of improved animal-drawn implements. By improving the cultivation practices like terrace cultivation in place of shifting cultivation and reclamation of low-lying valley lands, greater areas can be covered and annual usage of animals can be increased. Secondly, the introduction of improved implements in place of the locally available implements for various farm operations will help in increasing their use manifold. Thus, by giving due attention to these problems the overall productivity of draught animals can well be improved. Besides, the desi yoke may be replaced by an improved yoke, in order to harness more draft power. On terraces where the use of two-bullock system is not feasible, single bullock-operated improved tools and harness should be introduced. For economical use of the wastes from animals, bio-gas plants may be introduced so that the gas may be used for domestic needs and the slurry as manure to crops.

Conclusions

The difficult topographical and agro-climatic conditions coupled with poor economic status of the farmers of N.E.H. Region has forced them to continue with the traditional methods of cultivation practices which require major use of human power and inefficient, primitive tools. With the improvements in agricultural practices and introduction of improved variety of seeds, fertilizers and other inputs, the selected use of efficient power machine system is bound to take place in order to achieve the desired objectives. An efficient use of the presently available power from draught animals is likely to meet the future power requirements of the farms. For increasing the use of draught animals for agricultural purposes, local implements are required to be replaced by improved implements.

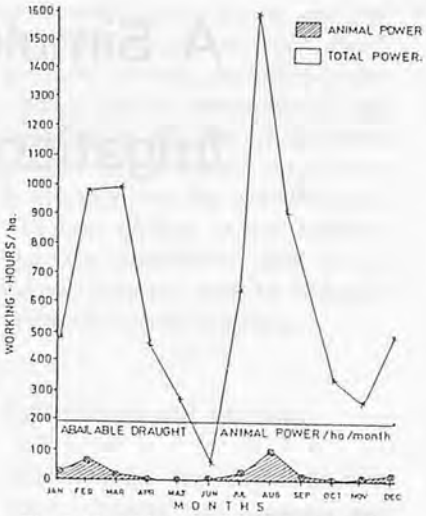

Fig. 2 Monthly use of draught animal for rice cultivation in valley land.

REFERENCES

1. Indian Livestock Census (1972). Directorate of Economics and Statistics, Ministry of Agriculture and Irrigation, Government of India, Vol. I.
2. Sahu, S.D, Singh, A. and Singh, M.D. (1980). Farm Power Sources and their Utilization in NEH Region, Research Bulletin No. 7. Division of Agricultural Engineering, ICAR Research Complex for NEH Region, Shillong.
3. Pandya, A.C. (1980) Energy for Agriculture in India, Technical Bulletin. Central Institute of Agricultural Engineering, Bhopal.

A Simple Recorder for Monitoring Irrigation Water Flow

by
T.B.S. Rajput
Scientist S-2
Water Technology Centre
Indian Agric. Res. Institute
New Delhi, India

Introduction

An integrated development of water resources involving efficient methods of conveyance and distribution at the farm and efficient methods of water application is an urgent need for getting proper returns from the investments on water. Present-day knowledge of soil-water-plant relationships permits the irrigation systems to be designed for applying water in required quantities. In order to use this knowledge efficiently a reasonably accurate measurement of water is necessary. However, there exists a major difficulty in obtaining correct records of the water applied to the fields, particularly under fluctuating supply conditions where all available 'instantaneous flow indicating devices' such as weirs, orifice and flumes are not of much use.

Fig. 1 A flow recorder ready for use.

An automatic flow recorder (Figs. 1-5) is presented and discussed in this paper. The recorder is suitable for precise measurement of the irrigation water supplies to the fields. The device utilizes the principle of proportional change in the nappe's projectile patterns (through an orifice) with respect to the ensuing flow rates.

In the developed device, flow takes place through an orifice. A hinged cover plate is made to move using the force of its nappe. The movement of the cover plate is recorded, through a pointer, over a 'chart' which is mounted over a clock-driven drum. The relationships between flow rates and pointer deflections were established for different sizes of orifices on the basis of which direct reading recorder charts were developed. The device in its present form is capable of recording flows from 0.2 to 2 *l*/s using a 2.5 cm dia orifice to 5 to 12 *l*/s using a 10.0 cm dia orifice, within an accuracy of ± 2.69%.

Device Description

The device consists of an orifice plate, a cover plate, a clock-driven drum and a pointer, all fixed on a chassis plate. Constructional details are shown in Fig. 2. The chassis plate is made exactly to the size of the available metallic check gate being used for controlling and diverting the flow in lined irrigation channels. Different sizes of orifices are made from the same size aluminium sheet such that any of them could be used with the same chassis plate. The orifice plate is fixed in the lower middle part of the chassis plate. The support bar of the cover plate is hinged to the chassis plate with the help of two support blocks, overlapping the orifice opening. One end of the pointer is fixed in the support bar and the other is provided with a pen. The clock-driven drum is placed parallel to the chassis plate and is attached to it.

The recorder is installed on a suitable frame (checkgate's frame) keeping the cover plate towards the downstream side. A drop between upstream and downstream water levels is needed to ensure free-flow condition for projectile of nappe from the orifice.

As soon as the water starts flowing through the orifice, it lifts up the cover plate in proportion to the ensuing flow rate. Since the cover plate and the pointer are fixed to the same support bar, the pointer also gets deflected in proportion to the movement of the cover plate, i.e., proportional to the flow rate.

The movement of the pointer

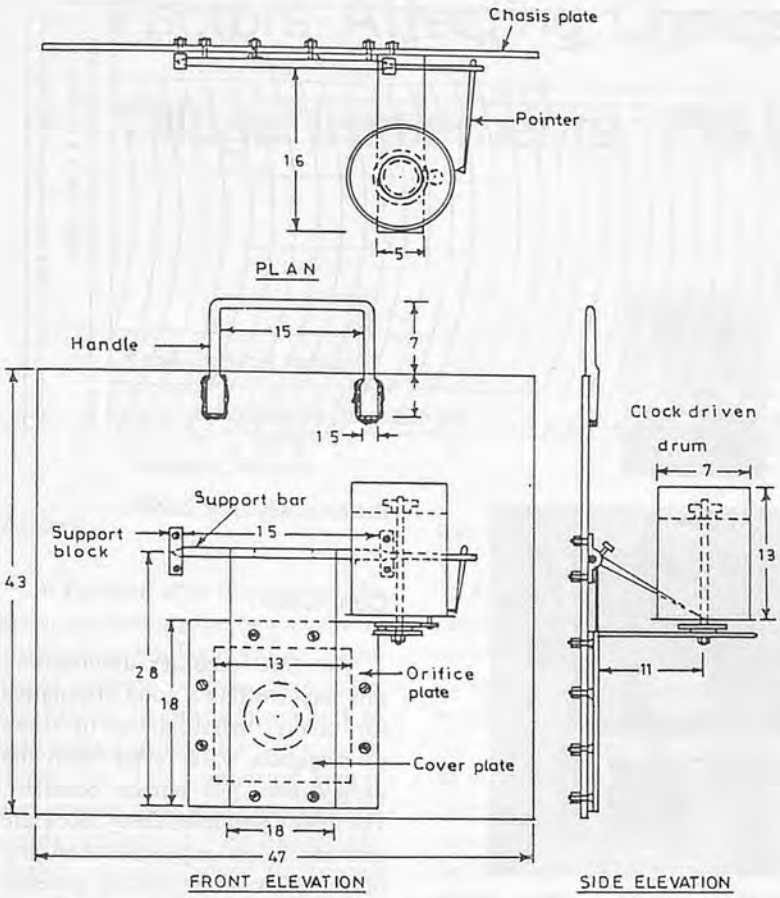

Fig. 2 Improved recorder for monitoring irrigation flows. Unit: cm

Table 1 Pointer Deflection with Respect to the Flow Rates through Different Size Orifices

Flow rate	Pointer deflection on recorder-chart for orifice diameter of			
l/s	2.5cm	5.0cm	7.5cm	10.0cm
0.2	4.5mm			
0.4	11.0			
0.6	22.0			
0.8	63.0			
1.0	76.0	12.5mm		
1.5	86.5	27.0		
2.0	95.0	51.0		
2.5		71.5		
3.0		82.0	32.5mm	
3.5		89.0	42.0	
4.0		93.0	54.0	
5.0		98.0	73.0	33.0mm
6.0			86.0	48.0
7.0			92.0	62.5
8.0			96.0	71.5
9.0				80.0
10.0				85.0
11.0				90.5
12.0				94.0

Note: From the above table, the operative range of flow measurement for different size orifices are: 0.2 to 2.0 *l*/s for 2.5cm dia. orifice
1.0 to 5.0 *l*/s for 5.0cm dia. orifice
3.0 to 8.0 *l*/s for 7.5cm dia. orifice
5.0 to 12.0 *l*/s for 10.0cm dia. orifice

is recorded, through its pen, on the graph paper (recorder chart) mounted around the clock-driven drum. Thus the movements of the cover plate and that of the drum produce a continuous curve (flow hydrograph) on the recorder chart. The rate of flow at any moment and the cumulative flow for a certain duration may be obtained from this flow hydrograph.

Calibration and Testing

The recorder was installed in a lined channel for testing and calibration. The water entered the channel through a precalibrated V-notch and a metergate. The water, flowing through the orifice of the device, was collected into a storage tank of known dimensions.

Different, known flow rates were maintained and allowed to flow through the device, for a known duration of time and water collected into the storage tank to cross-check the supply rates. For each flow rate, the pointer deflection on recorder chart was noted. **Table 1** presents the observations of pointer deflection with respect to the flow rates through 2.5 cm, 5.0 cm, 7.5 cm, and 10.0 cm diameter orifices, used in the recorder. Based on the observed relationships between discharge and pointer deflection, direct reading recorder charts were developed for different size orifices. One such recorder chart developed for 5.0 cm diameter orifice is presented in **Fig. 3**.

Using these recorder charts, a series of constant as well as varying flow rates were allowed to flow through the device and the water was collected into the storage tank. The volume of water collected in the tank was matched with the value of the cumulative flow obtained from the recorded flow hydrograph. It was found that the recorder performed within

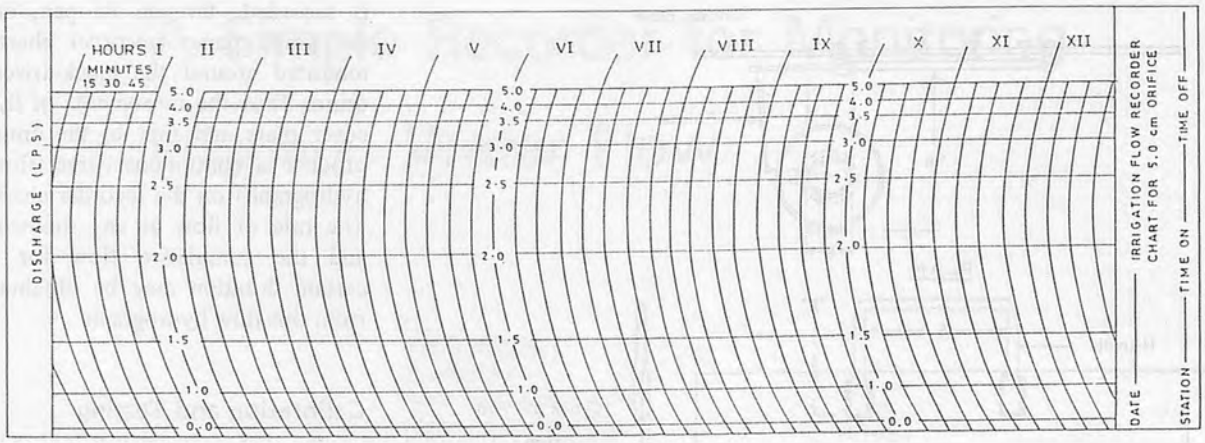

Fig. 3 Flow recorder chart for 5 cm orifice.

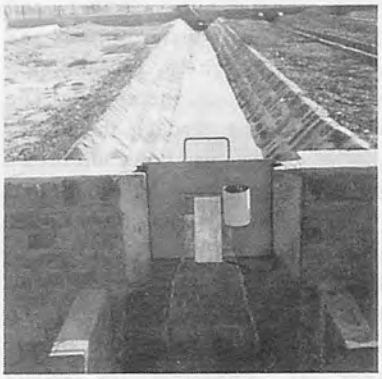

Fig. 4 A flow recorder in operation.

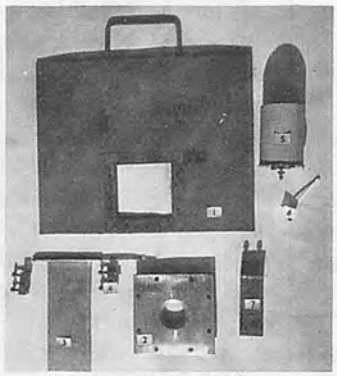

Fig. 5 Flow recorder parts: 1–chassis plate, 2–orifice plate, 3–cover plate fixed with support bar, 4–support cone, 5–recorder chart mounted over the clock-driven drum, 6–pointer with pen, 7–base plate clock-driven drum.

the accuracy of ± 2.89%.

Conclusion

The flow recorder discussed in this paper offers a good alternative for precise measurement of flows of irrigation water even when the supply does not remain constant. The device is simple, handy, accurate and much less expensive than any other automatic recording systems. A little care and maintenance of support bar hinges and clock mechanism is, however, necessary for good performance of the device. ■■

Factors Affecting Choice and Use of Tillage Implements: Pakistan Setting

by
Khawaja Altaf Hussain
Lecturer
Dept. of Farm Machinery and Power
University of Agriculture
Faisalabad, Pakistan

Hafiz Muhammad Munir
Lecturer
Dept. of Irrigation and Drainage
University of Agriculture
Faisalabad, Pakistan

Abstract

In Pakistan after the wake of the green revolution, the biological and chemical technologies led to a significant increase in crop production. Mechanical innovations relevant to agricultural production were introduced, but their restricted supply and unwise use caused no effect towards per hectare yield increments. Rather, it only helped to increase the cropped area. An attempt is made to justifiably fit the machine/equipment in the economic development model for various ecological zones of the country to boost the crop varietal potentials for improving yield averages.

Tillage implement combinations were prepared keeping under consideration the soil characteristics, water use efficiencies, soil manipulation requirements and cropping patterns. The appropriate orientation of the factor inputs has caused a significant yield increase at a few research stations in Pakistan.

The reorientation of all the factor inputs showing an increasing utilizing trend would positively enhance the cropped area, the cropping intensities and ultimately the average crop yields.

*Paper presented at annual convention of P.S.A.E., held at Hilton Hotel Lahore, May, 1984.

Introduction

Agriculture in Pakistan has generated the economy of the country to a G.N.P. of 6% per annum as a major share (3). It is evident that the biological, chemical and mechanical technologies have positively influenced agricultural productivity. The rate of various factor inputs in a decade, i.e., fertilizer 382%, varietal innovations 310%, pesticide adoption 105% and machine operations have no doubt led to increases in cropped area, but not the yields per hectare (3).

The potentials already available in the agriculture sector can very improve the cropping intensities as well as better yields with effective re-orientation.

The technological advance in agriculture can be matched with any enterprise. The machine technology is now very well understood at the agricultural base. It is the adoption of these machines in the most appropriate manner that will achieve the ultimate objective of maximum production. Both theoretical and practical work are being carried out in this field of technology by various agencies, including the University of Agriculture, Faisalabad (7).

One of the determinants of all the agricultural operations is tillage operation and maximum time is allocated to this factor. Improper and unjustified use of tillage implements destroy the root zone in the soil and ultimately stagnates crop yields (11).

The unwise use of various tillage implements wastes fuel and human energy with minimum benefits in terms of yields. Presently, 120 000 tractors are working approximately for 400 h per year each, for tillage operation, which in turn account for 1 800 *l* per tractor. The total fuel cost is estimated at US$6 million, a heavy burden on foreign exchange and the country's economy (9).

Various research and farm studies in tillage consider different factors such as deep and shallow ploughing, zero tillage, soil compaction, soil permeability, structural and textural changes, infiltration rates (void ratio), soil moisture contents, precise cultural practices, implements combination and crop rotation. For example, wheat yield was influenced with the use of chisel, sweep cultivator and seeding with multicrop hoe drill that gave 1 475 kg/ha compared with only 516 kg/ha using traditional practices (2). At the University of Agriculture, Faisalabad, it was reported that wheat yield with deep ploughing yielded 2 018-3 411 kg/ha, while traditional ploughing

yielded only 387-562 kg/ha.

Such studies have shown effects on yield, water saving, seed emergence and economical returns. The present study is an effort aimed at establishing appropriate implement combinations for cultivation at different farm locations, keeping in view the research work already done by various agencies. In order to achieve suitable implement combinations, soil characteristics, cropping pattern and irrigation facilities were included in this investigation.

Methodology

Secondary data was gathered to reach suitable combinations of different tillage implements. Research centers at Islamabad (FMI), Multan (AMRI), Faisalabad (U.A.F.), Lahore, Millat tractors and literature on tillage were consulted (4, 5, 8, 12, 13).

The three regions of Pakistan were taken as the base of the study; namely, Northern, Central and Southern regions (6). The different tillage implements and their combination were made on the basis of soil characteristics and tillage effects on soil physical properties in "Barani" and irrigated areas. The other factors considered were penetration resistance, shear strength of soil, emergence resistance, soil moisture contents and soil densities (1).

Table 1 Crop Root Zones

Shallow-rooted crop (30-60cm)	Medium-rooted crop (60-120cm)	Deep-rooted crop (120-180cm)
Cabbage	Sugar beet	Cotton
Onion	Tobacco	Alfalfa
Rice	Wheat	Deciduous fruit trees
Potato	Banana	Citrus
Cauliflower	Maize	Sugarcane
Other small vegetables	Millet	Sorghum
	Millons	Berseem
	Grass	Lucern

Discussion

The farm location influences the use of tillage implement, hence this factor must be well assessed. Each region has different soil types, rainfall, irrigation systems and major crops. When crop selection is dependent upon various regional constraints, it is equally dependent upon root development zones and maximum and minimum workable depths of various implements **(Tables 1 and 2).**

In selecting the tillage implements for certain locations, it is important to identify their features.

Implement use varies from soil to soil. Some implements cause moisture to be retained more than others; some invert the soils but others do not; some break the hard pan and others bury trash. In addition to these features, it is equally important to assess the workability of the implements on different on different soils **(Table 3).**

Soils in Pakistan may be classified into eight categories, namely; mountains, piedmont plains, potwar-upland, rolling sand plains, bar uplands, sub-recent river plains, active and recent river plains and Indus delta (1).

Texturally, soil particle sized fall into three major groups; coarse, medium, and fine (sandy, silty and clayey). The textural variation of soils in each region influences the selection of implements.

Tillage implements operate for cutting, mixing, pulverizing or inversion of soil and crop residue, aeration of soil and breaking of hard pan, which affect the soil physical properties, plant population and crop yield. Of all soil physical properties, penetration resistance, shear strength, emer-

Table 2 Agricultural Regions and Selected Features

Agricultural regions	Divisions	Soil type	Rainfall cm	Sources of irrigation	Major crops	Root zone depth cm
Southern region	Karachi	Comparatively fine textured	18	–	Rice	30-60
	Lasbella		18	Canal,	Wheat	60-120
	Hyderabad		18	open wells and	Cotton	120-180
	Khairpur		18	"Karez"	Sugarcane	120-180
	Quetta		18			max. 180
	Kalat		18			
Central region	Multan	Alluvial deposite having 10-15% clay.	20-102	Canals,	Wheat	60-120
	Faisalabad		20-102	well and rain	Maize	60-120
	Bahawalpur		20-102		Rice	30-60
	Lahore		20-102		Sugarcane	120-180
	Sargodha		20-102		Cotton	120-180
	Rawalpindi		20-102			max. 180
Northern region	Peshawar	Comparatively greater proportion of coarser particle in all soil types.	15	About 1/3	Wheat	60-120
	D.I. Khan		15	by canals	Maize	60-120
	Malakand		15		Sugarcane	120-180
	Tribal areas of North West		15		Tobacco	60-120 max. 180

Table 3 Main Features of Tillage Implements

Implement	Effective operational depth cm	Workable soil	Water retaining effect	Soil inversion	Specific operations
M.B. plough	30-38	Usually on sod & stubble soil, using different bottoms in sticky and high abrasion soils.	Medium	Maximum	Soil is broken and pulverized Also used to cover crop residue.
Disk plough	30-46	Sticky, waxy, hard dry, rough stoney, rooty ground soils.	Medium	Partial inversion	Soil is lifted, pulverized for controlling weeds, for cutting up and mixing stubble.
Sub-soilers	50-90	All types, especially for clayey compacted soils	Maximum	Nil	To break hard pan below normal depth of tillage and loosen soil by lifting or displacement.
Chisel plough	46-76	All types, especially for light soils.	Maximum	Nil	To loosen hard, dry soils before regular plough is used, for subsurface tillage practices. To break up hard layer of soil just below the regular plowing depth.
N.T. cultivator	23-30	Light & medium soils	Medium	Nil	To kill weeds, stir and aerate soil and mulched surface.
Sweep cultivator	23-30	Light & medium soils.	Medium	Less	Leave no uncut weed roots.
Disk harrow	10-15	Used on soil that have stalks, stubble, medium hard soil	Medium	Medium	Green manuring, crush clods, stir soil, destroy weeds and cover seeds.
Rotary cultivator	15	Medium and heavy soils	Maximum	Maximum	Green manuring, levelling, clod breaking, mulching and moisture preservation

gence resistance to plant, moisture content capacity and soil density are vital. These parameters were studied for different combinations of tillage implements.

Two sets of crop rotations each for Barani and irrigated areas were prepared for the study. The selection for specific crop rotation can be made depending upon the area or region and farmer/researcher choice to fulfill the requirements.

Probable Implement Combinations

Based on workable depth, soil characteristics and irrigation facilities, the implements found acceptable, by region, follow;

Northern Region

(a) For stoney and clayey soil:

Primary implements – 1. Disk plough, 2. Sub-soiler

Secondary implements – 1. Narrow tine cultivator (N.T. cultivator), 2. Disk harrow

(b) For sandy soils:

Primary implements – 1. Sub-soiler, 2. Chisel plough

Secondary implements – 1. Disk harrow

Southern Region

(a) For loamy, silty and clayey soils:

Primary implements – 1. Mouldboard Plough (M.B. Plough), 2. Sub-soiler, 3. Chisel plough.

Secondary implements – 1. Sweep cultivator, 2. Disk harrow, 3. Rotary cultivator.

(b) For clayey loam soils:

Primary implements – 1. Disk plough, 2. Sub-soiler.

Secondary implements – 1. N.T. cultivator, 2. Disk harrow, 3. Rotary cultivator

(c) For silty clayey loam soils:

Primary Implements – 1. M.B. plough, 2. Sub-soiler, 3. Chisel plough.

Secondary Implements – 1. Sweep cultivator, 2. Disk harrow, 3. Rotary cultivator.

Central Region

(a) For silty, loamy and clayey soils:

Primary Implements – 1. M.B. plough, 2. Sub-soiler, 3. Chisel plough.

Secondary Implements – 1. Sweep cultivator 2. Disk harrow 3. Rotary cultivator

(b) For loamy soils:

Primary implements – 1. M.B. plough, 2. Sub-soiler, 3. Chisel plough

Secondary implements – 1. Sweep cultivator, 2. Disk harrow.

(c) For silty, clayey and loamy soils:

Primary implements – 1. M.B. plough, 2. Subsoiler, 3. Chisel plough

Secondary implements – Sweep cultivator, 2. Disk harrow, 3. Rotary cultivator.

A farmer can go for the selection of either complete set of implements as cited above or combination of at least two (one primary and one secondary), depending upon fund availability and farm size (Table 4).

Suggestions

1. Credit institutions/banks should

Table 4 Soil Characteristics and Selection of Implements

Soil categories	Mountain	Piedmont plains	Potwar uplands	Rolling sand	Bar upland	Sub-recent river plains	Active & recent river plain	Indus delta	
Criteria for selection	Soil	Soil and rain	Rainfall	Soil	Rainfall	Soil	Soil	Soil and rain	Specific users
Textural class	Stoney clayey	Loamy and silty clayey	Loamy	Sandy	Loamy	Clayey loam	Clayey loam	Silty loam	
Primary implement									
Mould board plough	–	Yes	Yes	–	Yes	–	–	Yes	It breakes, pulverizes and invert the soil.
Disk plough	Yes	–	–	–	–	Yes	Yes	–	It is used for pulverizing soil, controlling weeds and mixing stubbles.
Sub-soiler	Yes	Yes	Yes	Yes	Yes	Yes	Yes	Yes	It breaks hard pan below normal depth.
Chisel plough	–	Yes	Yes	Yes	Yes	–	–	–	It is used to loosen hard dry soil and for sub-surface tillage interculture.
Secondary implement									
Narrow tine cultivator	Yes	–	–	–	–	Yes	Yes	–	It aerates soil and mulches surfaces.
Sweep cultivator	–	Yes	Yes	–	Yes	–	–	Yes	It destroys weeds.
Disk harrow	Yes	Yes	Yes	Yes	Yes	Yes	Yes	Yes	It is used for green manuring, crushing clods and destroying weeds.
Rotary cultivator	–	Yes	–	–	–	Yes	Yes	Yes	It is used for green manuring, levelling, clods breaking and mulching surface.
Regions	Northern	Southern	Central	Northern	Central	Southern	Southern	Southern and central	

prepare implement selection criteria reports and sets of implement combination charts for use in loan supervision for different regions of the country.

2. Soil tests should be conducted by lending agencies in order to facilitate loan release for the most appropriate selection of implements.
3. Farmers should be advised by the agricultural extension service to adopt particular crop rotations and implement sets appropriate for their regions.
4. Collaboration between research institutions and progressive farmers is necessary in order to establish the authentication of various tillage implements at different regions on various soil types.
5. The agricultural extension service should promote appropriate tillage implements through mass media.

REFERENCES

Afzal, M. 1976. "Farming in Pakistan" 1st ed. Pakistan Academy of Sciences, Islamabad.

Chaudhry, A.D. et al.; Rep. "Comparative study of different mechanised cultivation techniques" ADBP. Dept. of Farm Machinery & Power, University of Agriculture, Faisalabad.

"Economic Survey of Pakistan" Pub. Government of Pakistan – 1983-84.

Hunt, D. "Farm power and machinery management. Laboratory Manual and Work Book." D. No. 73-85.

Kepner, R.A.; Roy, B. and Barger, E.L. "Principles of Farm Machinery". pp 112–134, 117–207.

Lockwood, D. Brain, A.D.C. Association 1981. "Review of Farm Mechanization in Pakistan.

Schwab, G.O.; Richard, K. Frevert; Edminister; and Barnes; "Soil and Water Conservation Engineering". Page No. 220.

Sheikh, G.S. Sial, J.K. and Afzel, M. (1981). "Comparative performance of N.T. Cultivator with sweep cultivator. J. Agri. Mechanization in Asia (AMA)" Japan, Spring Issue.

Sheikh, G.S.; Sial, J.K. and Afzal, M. (1980). "Disk harrow and appropriate tillage implement". J. Agr. Mech. Asia (AMA) Japan.

Sheikh, G.S.; 1981. "Effects of selected powered tillage practices on soil characteristics and crop yield. Rep. Joint Contribution of U.A., Faisalabad. Pakistan Science Foundation.

Smith, H.; Pearson, A.E. "Farm Machinery and Equipment" pp 87–165.

Wilkinson, R.H. Oscar, A. "Elements of Agricultural Machinery". P. No. 46–50. 59–70. Michigan State University, U.S.A.

Factors Influencing Threshability of Maize in Nigeria

by
K.C. Oni
Senior Lecturer
Dept. of Agric. Engg.
University of Illorin
Nigeria

M.A. Ali
Agric. Engineer
P.O. Box 11856
Kano, Nigeria

Introduction

Maize (*Zea mays L.*), otherwise known as corn, is one of the most versatile cereal staples in Nigeria. Maize is harvested for grain or silage, with only a limited quantity fed green or used as fodder crop. About 80% of this crop is harvested for its grain and processed to give food ingredients, industrial products, feed ingredients and alcoholic beverages.

Nigeria has about 93 480 000 ha of land of which 32 172 000 ha (35 %) are presently under cultivation (5). Cereal grains form a high percentage of crops grown in Nigeria.

Harvesting and threshing of maize has posed a major problem in Nigeria, particularly with the recent increase in the production of the crop. In most farms, the crop is harvested and processed by hand using inefficient tools, culminating in high labour requirements of over 30 man-hours per cubic meter of grain (1). This further lends credence to the need to mechanize Nigerian agriculture.

Losses are incurred in maize production during harvesting and threshing operations. Maize harvesting for further processing in the study area starts in the month of September or October when rainfall has virtually ceased and sunshine intensity is highest. After cease of rain, field drying is quite fast.

Mechanical threshing of maize in Nigeria is becoming popular due to large-scale adoption of production technologies. Losses during threshing of maize is quite varied. The most obvious is the unsuitability of threshing machines to local varieties. Variation in the physical characteristics of maize ears (cobs and kernels) also influences their threshability (2).

During threshing, large quantities of maize is either lost or damaged. Damaged grains have low test quality and constitute unusable portions. It is, therefore, necessary to take cognizance of the physico-mechanical properties of cereal grains in the harvesting, handling and processing of the crop (4).

Moisture loss in maize kernels depends on the variety and location of observation, but generally shows a decreasing trend with time. For kernels to realize maximum weight, kernels must remain on the cobs during drying process (3). Hence, harvesting and artificial drying of high moisture maize may not be conducive for maximizing kernel weight. It is not unlikely that, during field drying of maize, there is moisture migration from the cob to the kernels, carrying with it solubles which increase the dry matter content of the kernels (3).

Reported in this paper is the influence of field drying of two varieties of maize on their threshability, using a modified, diesel engine driven, stationery thresher which was originally designed to handle about 1.2 t of maize per hour.

Agronomic Requirements

The site for the present investigation was Samaru in Kaduna State of Nigeria. Maize is planted at the onset of rains, about early May, on lands prepared using either tractor-drawn implements or traditional tools, depending on the extent of mechanization. This crop could be grown on the flat or on ridges spaced 75 to 90 cm apart. There are usually two plants per stand spaced 50 cm apart on the ridge (row).

Maize eaten green is harvested in July/August. Otherwise, the crop is left on the stalks until October/November when it is harvested for further processing. It is not uncommon for the crop to be harvested before the case when the land is to be used to grow other crops before the end of growing season.

Field Drying

The drying characteristics of two varieties of maize in the study location was investigated. The two varieties were the white maize varie-

Table 1 Monthly Rainfall and Sunshine Hours at Study Location

Year	Month												Total	Mean
	J	F	M	A	M	J	J	A	S	O	N	D		
	Rainfall, mm													
1982	0.0	0.0	0.0	59.7	72.1	113.9	168.7	190.7	117.6	45.8	0.0	0.0	768.5	64.0
1983	0.0	0.0	0.0	0.0	73.3	74.3	107.5	259.7	93.4	0.0	0.0	0.0	608.0	50.7
	Average sunshine, hours													
1982/83	8.6	7.8	7.6	8.1	8.2	7.3	6.6	6.6	7.1	8.0	8.0	8.4	92.3	7.7

ty otherwise referred to as TZB and the Western Yellow variety referred to as WY. The investigations were carried out in the 1982 and 1983 growing seasons. In 1982, the moisture content variation with time was monitored on maize kernels and cobs while in 1983 this was observed on kernels, cobs, stalk and the soil. The number of plants that lodged as drying progressed were also monitored for the two varieties.

Table 1 gives the monthly rainfall figures and the average sunshine hours for the two years under study.

Threshability of Low-moisture Maize

Mechanical shelling of low moisture maize poses a problem in Nigeria because of:

(1) Lack of satisfactory shellers. Shellers developed locally are, invariably, manually operated with low output.

(2) Production levels of most farmers do not justify ownership of power-driven shellers in terms of cost and needed source of power.

(3) Lack of technical know-how which hampers chances of farmer-ownership of shelling machines.

Table 2 illustrates the output of manual shellers locally available in Nigeria (6) while **Table 3** shows the locally available portable power-driven shellers found to be suitable for shelling local varieties of maize (7). There are other maize shellers but their supplies are not reliable to warrant any mention here.

Table 2 Manual Maize Shellers Evaluated at Study Location*

Sheller	Output, kg/man-h	Threshing efficiency, %
I.A.R. Cone sheller	49.0	99.8
Morogoro sheller	39.1	99.9
Kwara sheller	22.4	91.7
Black beauty sheller	87.6	100.0
Decker sheller	40.1	99.9

Source: Test Report No. DAE/78/6 (6).
*Evaluation at moisture content of 6.0% (d.b.) for all maize varieties.

Experimental Procedure

This investigation is divided in two parts:

i) Field drying study of TZB and WY varieties of maize grown at study location; and

ii) Mechanical shelling of resulting low moisture maize using a portable, diesel engine-driven, Nogueira SDMN 15/35 maize thresher.

Field Drying Study

During each of the two growing seasons, 1 ha of each variety of maize was grown at the study site. For each variety, three sample locations were selected at random with each location being 10 m x 10 m in size. Data were collected between October and November in 1982 and 1983, respectively. From each sample location, there was random harvest of 5 ears at each harvest time for moisture content determination. Two plant stalks were also harvested per sample location in 1983 to determine the moisture content in the stalks at harvest time. Samples were taken from the top, middle and lower portion of the stalks to get representative moisture sample. Kernels from each sample location was hand-shelled, mixed thoroughly and a representative sample was taken for moisture content determination. The cobs were also dropped, mixed thoroughly and a moisture sample taken. Drying was done by oven method.

The resulting data for each sample data was the average moisture data from the three sample locations for each variety. The soil moisture content was sampled in 1983 from 0 to 10 cm soil depth for each variety.

Mechanical Shelling

The threshing machine used for this investigation was the Nogueira SDMN 15/35. For proper monitoring of needed information, it was

Table 3 Power Driven Maize Shellers Evaluated at Study Location+

Sheller	Power source	Power requirement, kW	Output, kg/h.
Nogueira SDMN 15/35	Tractor P.T.O/stationery engine	4 - 7	1000-1400
Ransomes/Hunt LION	Tractor P.T.O.	8-12	2500-3500
Ransomes/Hunt COBMASTER	Pedal/Treadle operation	–	160-360

Source: Test Report No. DAE/79/9 (7)
+ Evaluation at 6.0% (d.b.) moisture content for all varieties of maize

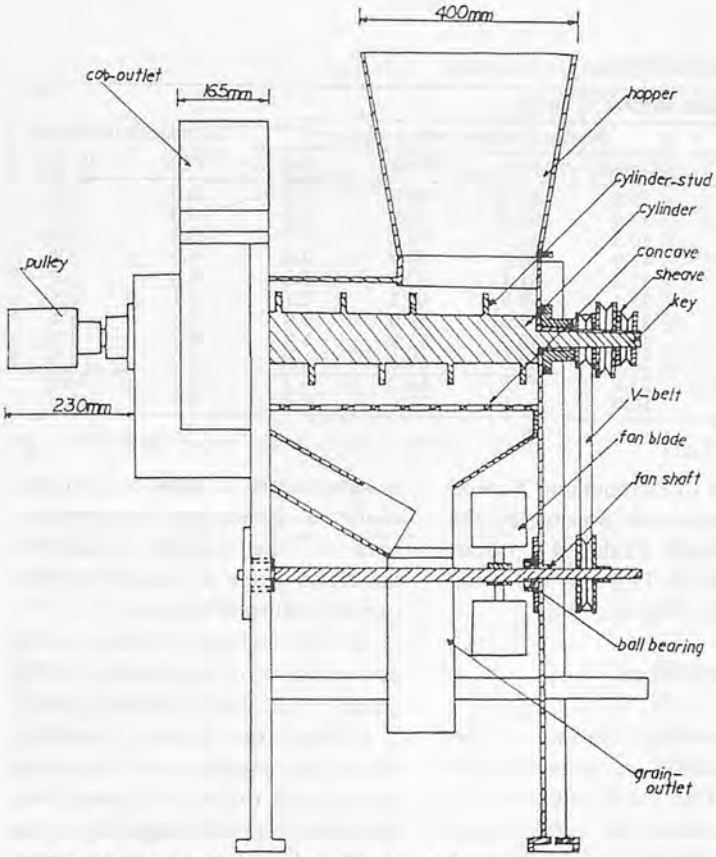

Fig. 1 Sectioned view of modified maize thresher.

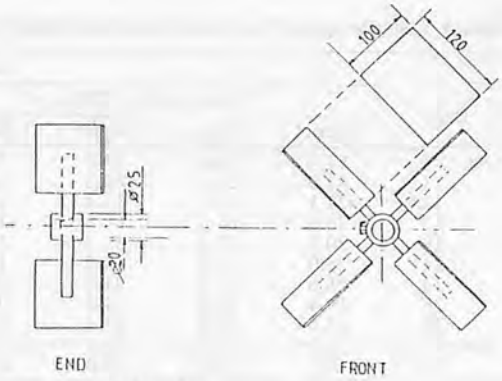

Fig. 2 Axial flow fan.

necessary for the threshing machine to be modified. It was desired that the total effluents from the grain and cob outlets be collected separately. During preliminary threshing, there was loss of grains from the hopper, grain outlet and cob outlet, respectively. There was, therefore, a need to modify the hopper by providing hinged lid to reduce loss of shattered grains.

The grain outlet was projected down to effect better collection of effluents. The cob outlet was also projected to effect good collection of the effluents and to prevent mixing of the effluents with those from the grain outlet. These modifications are shown in **Fig. 1**.

The need to improve on the cleaning efficiency necessitated incorporating axial flow fan as shown in **Figs. 1** and **2**.

There were four variables investigated as shown in **Table 4**. These were cylinder speed, feed rate, variety and ear size. Before the experimental runs, maize ears were completely sorted out by obtaining the mean diameter for each cob (mean of top, middle and lower diameters of each cob) with a vernier caliper. The variables studied were completely randomized and each treatment was replicated three times. The quantity of maize to be shelled was introduced into the hopper and the machine was powered by a 4kW diesel engine. The shelled grains and chaff fell through the concave perforations to the grain outlet. As they passed through the outlet, the axial flow fan blew in air and the chaff were winnowed away through the chaff outlet while the grains were collected at the end of the grain outlet. Cobs already shelled were drawn along the shelling crescent to a compartment leading to the cob outlet. The shelling quality was evaluated based on the following definitions:

Cleaning efficiency (C.E.),
$\% = 100\ W_1\ t/W_1$

Cob outlet loss (C.O.L.),
$\% = 100\ (W_2\ t/W_2\ ut)/W_T$

Percent damage (P.D.),
$\% = 100\ Wd/Ws$

Cylinder Loss (C.L.)
$= W_2\ ut$

Cylinder threshing efficiency (C.T.E.), $\% = 100\ (1 - W_2\ ut)W_T$

Overall Shelling Efficiency (O.S.E.), $\% = 100\ (W_1\ t - W_1\ d)/W_T$

Table 4 Variable Selections for the Investigation

Variable	Level	Selections		
Speed, r.p.m.	3	500	750	1000
Feed rate, kg/min	2	10	20	
Variety+	2	V_1	V_2	
Ear size ++, mm	2	E_1	E_2	
Replication	3	R_1	R_2	R_3

\+ V_1 = White maize (TZB) variety, V_2 = Western yellow maize (W.Y) variety
++ Based on concave clearance of 44mm, E_1 = Ear sizes with mean diameter $\leqq$ 44mm, E_2 = Ear sizes with mean diameter > 44mm.

Results and Discussion

Field Drying Study

Fig. 3 presents the graph of moisture content versus field drying time for the kernels and cobs of the two maize varieties in 1982. It will be observed from the plot that the

Table 5 Field Drying of Two Maize Varieties at Study Location (1983)

Date	Moisture content, % (w.b)								Cumulative lodging, %	
	White variety (TZB)				Western yellow variety (WY)					
	Kernel	Cob	Stalk	Soil	Kernel	Cob	Stalk	Soil	TZB	W.Y.
Oct. 6	51.4	58.0	68.5	3.9	57.8	66.4	69.4	4.2	0.0	0.0
11	41.0	56.3	66.3	3.7	54.9	65.0	68.9	3.8	0.0	0.0
13	37.1	53.9	63.4	2.5	50.3	61.7	68.7	3.7	2.3	3.1
17	36.8	51.7	61.3	1.4	41.9	61.5	68.4	2.3	4.2	3.9
19	30.5	49.6	58.3	1.3	37.2	61.1	67.4	2.2	4.8	5.5
21	25.0	43.3	54.5	1.2	35.1	59.0	67.1	2.1	5.1	5.5
24	21.6	37.3	41.3	0.9	32.3	52.9	59.0	1.9	5.5	6.4
26	19.4	28.6	31.5	0.9	27.1	50.9	55.8	1.9	5.8	8.2
28	11.6	23.8	24.4	0.8	23.7	44.3	47.8	1.6	6.9	12.7
Nov. 15	9.2	17.1	21.2	0.6	23.5	40.9	42.2	1.3	8.9	20.4
21	9.2	17.0	21.0	0.6	10.0	16.5	22.6	0.9	9.9	23.1

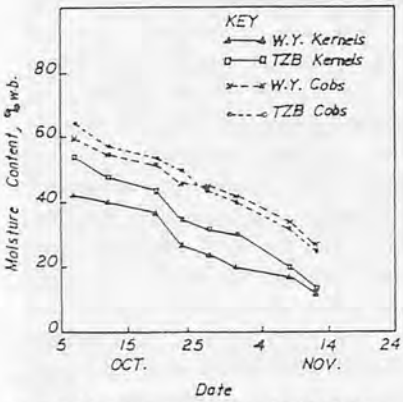

Fig. 3 Moisture content vs drying time.

rate of moisture loss was faster for the WY maize variety than for the TZB variety at the beginning of field drying but the difference in drying rate decreased with time. The moisture level in the cobs was higher than in the kernels and it is conceivable that there was moisture (and soluble) loss from the cobs to the kernels as drying progressed (3). About 22% of TZB plants and 33% of WY plants in the sampled areas were lodged, indicating the likely susceptibility of WY to harsh environment. **Fig. 1** further shows that low moisture levels in kernels could be achieved by delayed harvesting at study location.

The 1983 results of field drying is presented in **Table 5**. It will be observed from the table that the kernel moisture content was brought down by about 40% in 8 weeks for the two varieties. This rapid loss of moisture in crops in the months of October and November is further made possible by the sunshine hours (**Table 1**). About 10 and 23% of TZB and WY were, respectively, lodged in 1983.

Mechanical Shelling

The statistical analyses of the various variables are summarized in **Table 6**. This table indicates the contributions of the single factors and their interactions in bringing about results of various measurements. Cylinder speed, feed rate and ear size exerted profound influence on kernel damage, cylinder threshing efficiency and the overall shelling efficiency. The influence of variety as a single variable did not appear in the analysis but as interaction for the overall shelling efficiency at 5% alpha level.

Better interactions of chosen variables were quite evident for the overall shelling efficiency analysis as summarized in **Table 6**. It would, therefore, appear that the performance of the machine could be described from the results of the overall shelling efficiency.

Overall shelling efficiency is the percentage of total collected whole grains to the total threshed grains. It indicates the quality of shelling, taking into consideration the kernel damage and the loss of grains. It is influenced by such single factors as speed and ear size, two factor interactions of speed and variety, and feed rate and ear size. The three-factor interaction of speed, feed rate and ear size also showed significant contributions at 5% alpha level.

Figs. 4-9 illustrate the graphical relationship between investigated variables and the overall shelling efficiency. In **Figs. 3, 4 and 5**, ear sizes with mean diameter greater than 44 mm (E_2) consistently gave lower overall shelling efficiency

Table 6 Summary of Analyses of Variance for the Investigated Variables

Source of variation	Significance of F at 5 percent alpha level			
	Threshed kernel wt.	% Kernel damage	Cylinder threshing efficiency	Overall shelling efficiency
Replication (R)				
Speed (S)		X	X	X
Feed rate (F)	X	X	X	
Ear size (E)		X	X	X
Variety (V)		X		
S × F			X	
S × E		X	X	
S × V				X
F × E	X			X
F × V				
E × V				
S × F × E	X			X
S × E × V				
F × E × V				

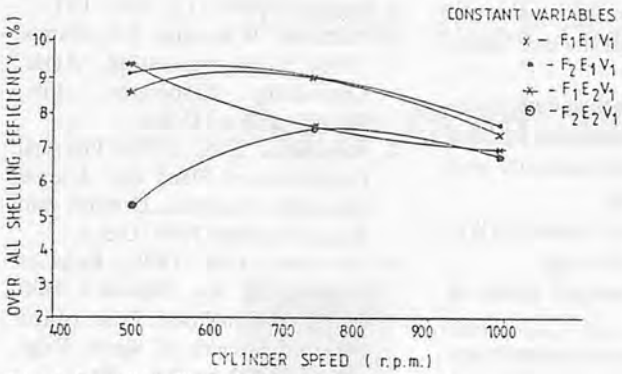

Fig. 4 Overall shelling efficiency vs speed for V_1.

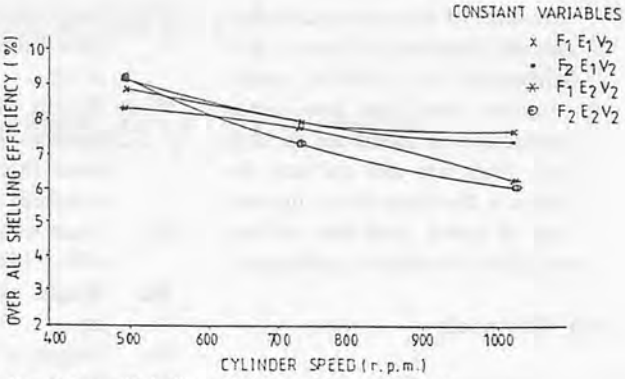

Fig. 5 Overall shelling efficiency vs speed for V_2.

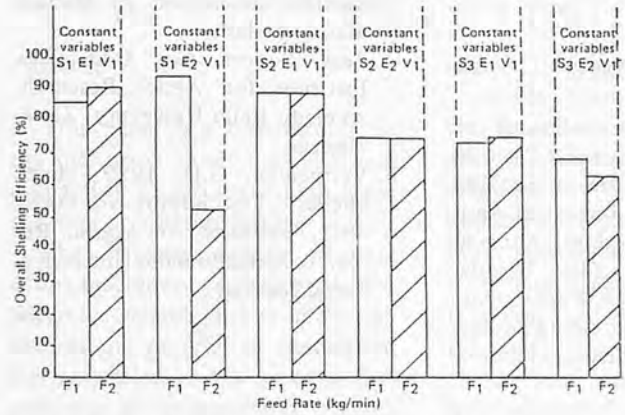

Fig. 6 Overall shelling efficiency vs feed rate for V_1.

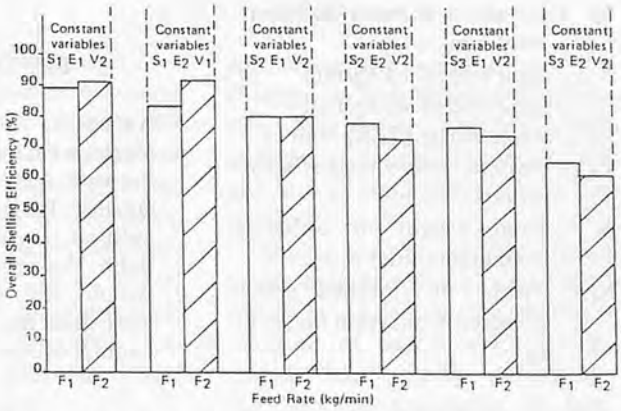

Fig. 7 Overall shelling efficiency vs feed rate for V_2.

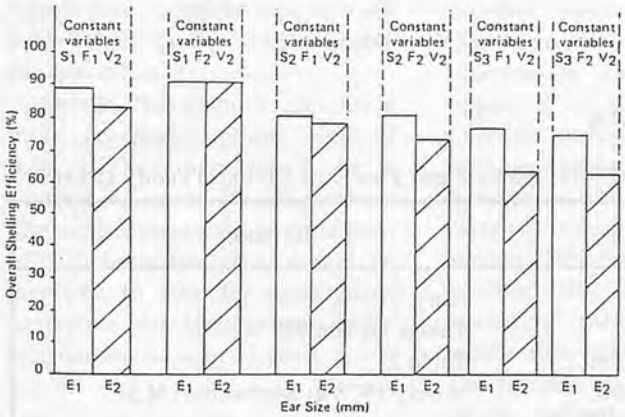

Fig. 8 Overall shelling efficiency vs ear size for V_1.

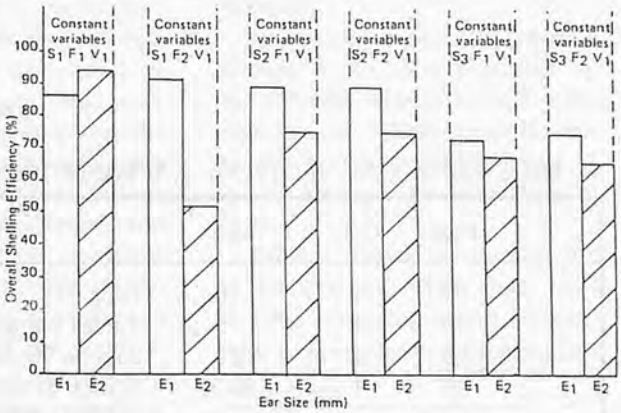

Fig. 9 Overall shelling efficiency vs ear size for V_2.

than those with mean diameter equal to or less than 44 mm (E_1) at cylinder speeds greater than 500 rpm for feed rates and varieties investigated. Figs. 6 to 9 show that the overall shelling efficiency is markedly influenced by the various combinations of cylinder speed, feed rate and ear size which further lends credence to the contribution of the three factor interactions in the statistical analysis results.

Conclusion

From this investigation, it can be concluded that

1. Field drying and, hence, delayed harvesting of the two varieties of maize investigated was possible at study location.
2. Field loss due to lodging was higher for Western Yellow (WY) variety than for the white (TZB) variety of maize.
3. The threshing machine to be used in any location must take cognizance of the variations in local varieties of crops and other environmental requirements.
4. Crop and machine parameters exert great influence on the per-

formance of threshing machines.

5. Overall threshing efficiency was influenced by cylinder speed, crop ear size, the two factor interaction of speed and variety, and, feed rate and ear size. So also was the three factor interaction of speed, feed rate and ear size all at 5% level of significance.

List of Symbols

E_1 Ear size with mean diameter $\leqq$ 44 mm

E_2 Ear size with mean diameter > 44 mm

F_1 Feed rate of 10 kg/min

F_2 Feed rate of 20 kg/min

V_1 White maize (TZB) variety

V_2 Western Yellow maize (WY) variety

W_1 Total weight of effluents from grain outlet in kg.

W_1t Weight of threshed grains collected from grain outlet in kg.

W_2t Weight of threshed grains obtained through the cob outlet in kg.

W_2ut Weight of unthreshed grains (grains still attached to cobs were threshed manually and weighed) in kg.

W_T Total weight of grains = ($W_1t + W_2t + W_2ut$) in kg.

Wd Weight of damaged grains in kg.

Ws Weight of sample taken in kg.

W_1d Weight of damaged grains (from W_1t) in kg.

REFERENCE

1. Ali, M.A. 1983. Influence of Machine Parameters and Physical Properties of Maize on Shelling Quality. Project Report in Agricultural Engineering. Ahmadu Bello University. Zaria. Nigeria.
2. Arnold, R.E. 1964. Experiments with Rasp Bar Threshing Drums. Journal of Agricultural Engineering Research 9 (1) : 99 – 131.
3. Johnson, W.H. and B.J. Lamp. 1966. Corn Harvesting. Agric. Consulting Associates, Inc., Wooster, Ohio. U.S.A.
4. Mohsenin, N.N. 1978. Physical Properties of Plant and Animal Materials. 2nd Ed. Gordon and Breach Science Publ. U.S.A.
5. Nwokedi, P.M. 1979. Role of Engineering for Nigeria's Self-Sufficiency in Food. Proc. of the Nigerian Society of Agric. Engineers. Vol. 3 pp. 26 – 30.
6. Vermeulen, G.D. 1978. Comparative Evaluation of Manual Maize Shellers. Test Report No. DAE/78/6. Institute for Agric. Research. Ahmadu Bello University, Zaria, Nigeria.
7. Vermeulen, G.D. 1979. Maize Shellers. Test Report No. DAE/79/7. Institute for Agric. Research. Ahmadu Bello University. Zaria, Nigeria.

ERRATA

Please refer to AMA, Vol. 17, No. 3, SUMMER 1986, pp27-31: "Simple and Low Cost On-Farm Paddy Dryer".

Page	Col.	Line	Error	Revision
27	1	15	raing	rainy
29	1	5	Tables 1 and 2	Tables 1A and 1B
29	1	27	data on Tables 1 and 2	Table 2
29	1	30-32	in each of the above-mentioned 4 months.	in July 1978 at Suphanburi M.S.,
29	2	3	the form	to form
29	2	16	casting	casing
29	2	26	800 rpm	1 800 rpm
29	2	34	(77/2 cm^2	(77/2 $cm)^2$
29	3	Table 3	No. of hours	Sum of hours
		Date 13	13.0	13.0
		Date 16	13.3	13.3
		Date 29	13.4	13.4

A footnote to Table 3: Black underlines mean "preceding 1.5h and succeeding 1.5h are available for drying paddy". Broken underlines mean "only preceding 1.5h is available for the same".

Needs and Availability of Agricultural Machinery in Chile

by
Edmundo J. Hetz
Assoc. Prof.
Agric. Engg. Dept.
University of Concepcion
Chillan, Chile

Abstract

This paper is a contribution to the discussion about the needs and availability of agricultural machines for food production in Chile.

The different sources of data about machinery availability do not present a reliable and accurate picture of the progress of agricultural mechanization in the country. The estimates of the number of tractors vary from 22 000 to over 30 000, figures that translate into a 0.40-0.45 HP/ha power level available for agriculture.

Should the country aim for a more acceptable power level of 0.70 HP/ha, there would be a shortage of some 13 700 tractors. The replacement rate of combines, of 120 harvesters/year, should be increased to 200, for some years, to replace the large percentage of machines older than 25 years.

Introduction

Chile is located in the southwest coast of South America with a total land area of 756 626 km^2 (not including the Antartic claim) with a total population of 11.5 million inhabitants. Northern Chile (Regions I, II, III and IV) is a desert where very few agricultural machines are used and the southern portion of the country (Regions XI and XII) is grassland and forest.

In the central part of the country, roughly between latitudes 30° and 42° South, temperate climate agriculture is practised. The most important crops are wheat, maize, bean, potato, oat, barley, rapeseed, lentil and sugarbeet. Other important crops are rice, sunflower, pea, rye and tobacco. Vegetables, orchards and vineyards also cover large agricultural areas.

Chilean agriculture has traditionally been more mechanized than her counterparts in most other countries of Latin America. It is important to point out that only 18% of Chile's population work the land, against 50% or more in other countries like Bolivia, Peru, Paraguay, Ecuador, Guatemala and Mexico. However, it is not clear whether the actual agricultural machinery park is adequate to satisfy the needs of the country. The problem has been compounded by the lack of reliable, complete, and up-to-date statistical data.

This paper is a contribution to the discussion about the needs and availability of agricultural machines for food production in Chile.

Agricultural Machinery Availability

The most comprehensive study about the mechanization of Chilean agriculture was carried out by the Production Development Corporation. The report (CORFO, 1969) contains statistical data until 1963 and it was published 6 years later in 1969.

Other sources of information about agricultural machinery existence in Chile are the National Institute of Statistics (INE), the Central Bank of Chile and, lately, the National Association of Agricultural Machinery Importers (NAAMI).

As it can be seen in **Tables 1** through **6** the data furnished by the different sources are not complete, do not match properly, and do not present reliable picture of the progress of mechanization in Chile.

Table 1 shows the importation of tractors into Chile from 1944 to 1963 according to the National

Table 1 Importation of Agricultural Tractors into Chile from 1944 to 1963

Year	Units	Year	Units
1944	198	1954	2 523
1945	470	1955	3 577
1946	791	1956	1 017
1947	620	1957	1 728
1948	1 710	1958	1 379
1949	1 184	1959	488
1950	776	1960	1 295
1951	1 996	1961	1 999
1952	1 752	1962	1 483
1953	1 597	1963	1923
Toral	11 094	Total	17 412
Total 1944–1963: 28 506 tractors			
Mean 1944–1963: 1 425 tractors/year			

Source: National Institute of Statistics; IN: CORFO (1969).

Table 2 Importation of Agricultural Tractors, by Makes, into Chile from 1959 to March 1985 (unit)

Make	1959	1960	1961	1962	1963	1964	1965	1966	1967	1968	1969	1970	1971
Allis-Chalmers	75	15	15	26	26	26	19	19	8	–	–	–	–
Belarus	–	–	–	–	–	–	–	–	–	–	–	–	–
Case	22	20	14	10	3	–	66	–	–	–	130	–	–
David Brown	30	5	18	3	34	–	100	–	–	–	130	–	–
Deutz	–	–	–	–	–	–	–	–	–	–	–	–	–
Ebro	–	–	–	–	–	–	–	–	–	–	–	–	–
Fiat	7	19	49	29	34	116	100	130	140	160	180	395	470
Ford	520	345	524	320	600	530	289	1 093	982	805	705	757	738
International	40	293	293	292	94	212	178	–	162	415	103	98	200
John Deere	111	6	152	155	63	44	157	69	81	248	150	175	115
Landini	–	–	–	–	–	–	–	–	–	–	–	–	–
Leyland	–	–	–	–	–	–	–	–	–	–	–	–	–
Massey-Ferguson	912	205	490	310	280	140	38	120	145	105	–	156	305
Mitsubishi	–	–	–	–	–	–	–	–	–	–	–	–	–
Nuffield	–	–	–	77	438	400	300	301	277	–	–	–	–
Pasquali	–	–	–	–	–	–	–	–	–	–	–	–	–
Universal	–	–	–	–	–	–	–	–	–	–	–	–	–
Valmet	–	–	–	–	–	–	–	–	–	–	–	–	–
Zetor	–	–	–	–	–	–	–	–	60	–	21	–	150
Octros	–	–	–	–	–	–	–	–	–	–	–	–	–
Total	1 717	908	1 555	1 222	1 572	1 461	1 247	1 721	1 847	1 733	1 389	1 581	1 978

Make	1972	1973	1974	1975	1976	1977	1978	1979	1980	1981	1982	1983	1984	(30/3) 1985	Total (1)	Total (2)
Allis-Chalmers	–	–	–	–	–	–	–	–	–	–	–	–	–	–	203	–
Belarus	2 500	–	–	–	–	–	–	–	–	–	–	–	–	–	2 500	2 500
Case	–	–	–	1	–	2	–	–	–	–	–	–	5	8	251	16
David Brown	–	–	–	33	–	106	166	262	210	46	–	–	–	–	1 143	823
Deutz	–	–	–	–	–	–	100	–	12	41	–	–	–	–	153	153
Ebro	–	–	–	–	–	100	–	3	–	–	–	–	–	–	103	103
Fiat	591	–	–	–	6	35	46	108	97	180	12	–	–	–	2 904	1 940
Ford	650	–	18	652	11	210	341	429	348	292	–	–	56	79	11 294	4 581
International	50	–	2	–	4	17	16	103	28	80	–	10	28	9	2 727	645
John Deere	115	–	94	89	41	144	141	357	290	286	21	–	21	6	3 131	1 895
Landini	–	–	–	–	–	–	–	–	–	–	–	–	24	17	41	41
Leyland	–	–	–	–	–	–	25	66	45	79	–	–	–	–	215	215
Massey-Ferguson	205	–	269	909	97	122	564	–	158	357	–	–	118	55	6 060	3 315
Mitsubishi	–	–	–	–	–	–	–	–	50	12	–	–	–	–	62	62
Nuffield	–	–	–	–	–	–	–	–	–	–	–	–	–	–	1 793	–
Pasquali	–	–	–	–	–	–	–	–	50	–	–	–	–	–	50	50
Universal	3 800	–	–	–	–	–	–	–	–	–	–	–	–	–	3 800	3 800
Valmet	–	–	–	–	–	–	–	80	5	40	–	–	25	26	176	176
Zetor	–	–	–	–	–	–	–	–	–	–	–	–	–	–	231	150
Octros	600	–	3	2	6	7	–	–	13	6	–	–	–	–	637	637
Total	8 511	–	386	1 686	165	743	1 399	1 408	1 306	1 419	33	10	277	200	37474	21 102

Source: National Association of Agricultural Machinery Importers (NAAMI).
Tractor Importation Permits issued by the Central Bank of Chile.
Total (1): Since 1959, Total (2): Since 1970.

Table 3. Importation of Tractors into Chile from 1977 to 1984 (unit)

Type	1977	1978	1979	1980	1981	1982	1983	1984	Total
Agricultural	1 350	1 560	1 436	1 312	1 511	47	21	252	7 489
Forestry	71	159	73	87	10	1	9	18	428
Total	1 421	1 719	1 509	1 399	1 521	48	30	270	7 917

Source: Central Bank of Chile and Customs Service Import Declarations.

Table 4. Tractors Imported Yearly into Chile

Period	Source	Tractors/
1944-1963	INE-CORFO	1 425
1959-1985 (March)	NAAMI	1 428
1970-1985 (March)	NAAMI	1 384
1972-1984	Central Bank of Chile	1 467
1972-1984	NAAMI	1 334
Arithmetic mean		1 408
Weighted mean		1 412

INE : National Institute of Statistics.
CORFO : Production Development Corporation.
NAAMI : National Association of Agricultural Machinery Importers.

Development Corporation (CORFO, 1969). **Table 2**, on the other hand, shows the importation of tractors, by makes, from 1959 to the first quarter of 1985, according to the NAAMI.

Table 3 shows the importation of tractors from 1977 to 1984 according to the Central Bank of Chile and the Customs Service. Importation of tractors for the period 1972-73 is estimated at 10 000 tractors of which 7 000 units came from the USSR and Romania. Therefore, the importation of agricultural tractors for the period 1972-84 reached 19 077 units according to the Central Bank of Chile. The NAAMI estimates an importation of 17 343 tractors for the same period.

The data presented in **Tables 1**, 2 and 3, summarized in **Table 4**, show that the historical importation of tractors into Chile can be estimated at 1 410 units per year.

Table 5 shows the quantity of agricultural machines present in Chile, according to the 1976 National Agricultural Census. **Table 6**, on the other hand, shows the quantity of agricultural machines in the main agricultural area of Chile (Regions V to X and Metropolitan), according to the 1984 Agricultural Survey, carried out by the National Institute of Statistics (INE, 1985).

On the basis of the data presented in **Tables 5** and **6**, the estimated

Table 5 Agricultural Machines Used in Chile, 1976

Machine	Quantity (Units)
Engines	
Internal combustion	16 714
Electric motors	25 964
Steam engines	2 033
Total	44 711
Tractors	
Less than 35 HP	7 828
35 HP or more	26 579
Total	34 407
Equipment	
Combines and threshers	7 805
Plows	34 135
Disk harrows	26 971
Seeders	9 421
Vehicles	
Trucks and pick ups	20 005
Wagons	42 363

Source: National Institute of Statistics. 1976 National Agricultural Census.

age of the machinery park and the accepted obsolescence of machines, the figures shown in **Table 7** are proposed as the actual number of machines working in Chilean agriculture in 1985.

Agricultural Machinery Needs

To answer the question whether there is enough machinery for the actual and potential levels of agricultual production a brief analysis of land use is necessary.

Table 8 shows the utilization of land in Chile during 1984 and an estimation of tractor journeys (8 h/journey) needed yearly. It is clear that the country needs 2 443 000 tractor journeys per year, from which 549 675 journeys, carried out by animal traction should be subtracted (20 to 25%; estimation by the National Planning Office). This results in 1 893 325 tractor journeys needed per year.

Assuming a tractor use equivalent to 500 h/year, 30 293 tractors would be needed and this quantity relates very closely to the 30 000 tractors now believed to be working in Chile, but is more than 8 000 tractors larger than the figure accepted by the NAAMI.

Table 6 Agricultural Machines Used in Chile, 1984

Region and Province	Machine (Units)			
	Tractors	Tractors Plows	Tractor-and animal-drawn	
			Seeders	Mowers
V VALPARAISO	2 840	2 110	400	400
Petorca	250	220	10	30
Los Andes	640	400	110	60
San Felipe	730	550	50	90
Quillota	650	530	70	70
Valparaíso	260	210	110	110
San Antonio	310	200	60	40
VI O'HIGGINS	5 920	4 650	970	860
Cachapoal	4 250	3 240	790	550
Colchagua	1 560	1 320	160	280
C. Caro	110	90	20	30
VII MAULE	3 440	2 540	560	690
Curicó	1 370	900	160	260
Talca	720	590	150	110
Linares	1 300	1 010	210	290
Cauquenes	50	40	40	30
VIII BIO BIO	4 090	4 200	1 130	1 400
Ñuble	2 180	2 600	590	580
Bío-Bío	1 310	1 100	450	500
Concepción	210	150	40	30
Arauco	390	340	50	280
IX ARAUCANIA	4 130	4 110	1 770	1 320
Malleco	1 150	1 820	490	360
Cautín	2 980	2 290	1 280	960
XI LOS LAGOS	5 060	3 230	2 050	2 630
Valdivia	1 750	1 150	810	850
Osorno	1 860	1 130	660	1 030
Lianquihue	1 450	950	580	750
METROPOLITAN	5 700	4 360	800	1 040
Santiago	730	600	80	140
Chacabuco	790	670	60	140
Cordillera	230	170	50	70
Maipo	1 410	990	160	180
Melipilla	1 570	1 120	340	350
Talagante	970	810	110	160
TOTAL	31 100	25 200	7 680	8 340

Source: National Institute of Statistics, 1984 Agricultural Survey.

However, the actual land use includes at least 1.5 million ha in fallow and idle land, a situation that needs to be changed into a more intensive use of the land to achieve food self-sufficiency and to supply the foreign market. Moreover, the Ministry of Agriculture in its Agricultural Development Plan 1965-1980 states that Chile has 5.5 million ha of arable land (Soil classes I, II, III and IV), a figure vastly different from the 3.3 million ha used by other sources.

Giles (1975) found a direct relation between crop yields and the power available for agriculture, up to 0.70 HP/ha. He also developed the hypothesis that the minimum agricultural power requirements for the developing countries lie in the range 0.50 to 0.70 HP/ha of cultivated land. However, Gomez Jasso (1983) presents power levels of 1.0 to 2.5 HP/ha derived from

Table 7 Proposed Number of Agricultural Machines Working in Chile, 1985

Machine	Units
Tractors	30 000 (1)
Combines	3 000
Threshers	3 500
Plows	25 200
Disk harrows	26 971
Seeders	7 680
Mowers	8 340

(1) The NAAMI believes this figure to be no larger than 22 000 units.

Table 8 Agricultural Land Use in Chile and Tractor Needs

Land Use	Area in 1 000 ha (1) A	Tractor Journeys (2) per ha (3) B	Tractor Journeys/year in 1 000 C = A x B
Annual crops	1 134	1.15	1 304
Permanent crops	242	3.00	726
Artificial pastures	439	0.60	263
Fallow and iddle land	1 503	0.10	150
Total	3 318	–	2 443

Source and Remarks:
(1) National Institute of Statistics, 1984 Agricultural Survey for Region V to X. 1976 Agricultural Census for the rest of the country.
(2) One Journey = 8 h.
(3) Agricultural Planning Office estimation for Journeys/ha.

experience with wheat in France.

Sial (1984), points out that there are developing nations with a low per capita income, where the available mechanical farm power lies far below this range (0.10 HP/ha in India; 0.12 HP/ha in Pakistan) and developed nations with a large amount of power available for agriculture (3.27 HP/ha in Great Britain; 13.30 HP/ha in Japan).

Accepting the existence of a total of 30 000 tractors in Chile, with an average available power (Power take-off HP) of 50 HP and 3.32 million ha of arable land, the power available for agriculture in the country would be 0.45 HP/ha. Considering the lower figure presented by the NAAMI of 22 000 tractors with an average power of 60 HP (newer models) the country would barely reach the 0.40 HP/ha level.

The author's opinion about tractor needs is that Chile should aim for a mechanical power level of 0.70 HP/ha, plus the actual level of animal traction in use. It is also reasonable to believe that there are some 25 000 tractors working now in the country with an average available power of 60 HP. Associating these figures with the 3.32 million ha of arable land the conclusion is reached that there is a shortage of some 13 700 tractors. This last figure points out the need to double, for nearly a decade, the historical tractor importation figure of 1 412 tractors/year to some 3 000 tractors/year.

In relation to the combine harvester needs it is accepted that they harvest 300 ha/year and that 850 000 ha are to be harvested yearly (INE, 1984). These data present a need of some 2 830 combines, a figure that is very closely related to the 3 000 combines presented in **Table 7**. However, it should be emphasized that at least 50% of these combines have 25 years of use or more. Consequently, the normal annual replacement of 120 combines should be increased to some 200 combines/year.

The quantity of other machines and implements like seeders, mowers, plows and disk harrows should increase in proportion to the increment in the number of tractors on the basis of the figures presented in **Table 7**.

Conclusions

The different sources of data about machinery availability in Chile (National Institute of Statistics – INE; Central Bank – CB; National Association of Agricultural Machinery Importers – NAAMI) present different estimates for the number of machines and it is difficult to develop a reliable and accurate status of the progress of agricultural mechanization in the country.

According to the INE and NAAMI there are some 30 000 tractors (50 HP available) working in Chile; the NAAMI believes this figure to be 22 000 tractors (60 HP available). The author's opinion is that a reasonable figure is 25 000 tractors (60 HP available). These data with the 3.32 million ha of arable land translate into a power level of 0.40 – 0.45 HP/ha.

Should the country aim for a more acceptable power level of 0.70 HP/ha, there would be a shortage of some 13 700 tractors. This would require doubling the historical tractor importation rate of 1 412 tractors/year to 3 000 tractor/year for nearly a decade.

The normal annual replacement rate of combines of 120 harvesters/year should be increased to 200, for some years, in order to replace the large percentage (50%) of machines older than 25 years.

REFERENCES

CORFO. 1969. (Production Development Corporation). Mecanización agrícola en Chile: diagnóstico a 1963. Santiago, Chile. (3 volumes.

Giles, G.W. 1975. The reorientation of agricultural mechanization for the developing countries. AMA 6(2): 15-25. Tokyo, Japan.

Gomez Jasso, R. 1983. Logros y aportaciones de la investigación en la ingeniería y la mecanización agrícola. SARH-INIA, México, D.F. 30 p. (Publicación Especial Nº. 109).

INE. 1985. (National-Institute of Statistics). Encuesta agrícola para Regiones V a X de noviembre 1984. Santiago, Chile.

Ministry of Agriculture. Agricultural Development Plan 1965-1980. Santiago, Chile.

Sial, F.S. 1984. Some thoughts on agricultural mechanization. AMA 15 (2): 35-40. Tokyo, Japan.

Farm Mechanization in Turkey

by
Aziz Özmerzi
Assoc. Prof.
Agric. Mechanization Dept.
Agricultural Faculty
Ankara University
Ankara, Turkey

Bahri Gökçebay
Assoc. Prof.
Agric. Mechanization Dept.
Agricultural Faculty
Ankara University
Ankara, Turkey

Introduction

The economy of Turkey depends upon her agriculture, hence farming is more important than other sectors of the economy. Animal production is also developing in the country.

Modern agriculture in the country started when the Republic was established by Atatürk, being the first and greatest leader of Turkey. Modern techniques of agriculture, as well as tractor, farm machinery and equipments were introduced to the Turkish farmers. In 1924, 221 tractors were distributed to farmers. By 1931 there were 99 plough manufacturers in Turkey. As a result, large areas began to be cultivated in a short time. The expanding use of farm machinery and equipment on farms has been a significant technological change in Turkish agriculture. The tractor has played a basic role in this change.

Agricultural Structure

The distribution of flora is a function of the condition of climate in Turkey. The country lies between the latitudes of 36-42° North. Three sides of the country are surrounded by sea. Anatolia, being in the middle of Turkey, has 97% of agricultural land and is surrounded by mountains. All these features cause Turkey to have various regions having different climate. In the seaside rainfall is about 1120 mm. In some places, especially in Anatolia, rainfall is about 200 mm. The part of Turkey having rainfall of less than 500 mm is 70% of total agricultural land and in these parts, dry farming is practised. In the southern area two crops a year can be produced by means of irrigation. Due to different climatic conditions, many different kinds of crops are produced.

According to the kind of the crop, the distribution of cultivated area is shown in **Table 1**.

On 93% of the cereal area, wheat, barley, oat, rye, maize, rice, and millet are grown. Pulse like dry bean, chickpea and lentil are also produced in Turkey. The industrial crops grown are cotton, flax fiber, hemp fiber, sugar beet, potato, and tea are produced in large areas.

Some 75 kinds of fruits, mainly orange, apple, pear, apricot, fig, peach, and lemon are grown in the country.

In the southern part of the country there are many green houses covering some 9300 ha. The availability of grazing land has resulted in improving the animal husbandry situation. Some 82 million head of animals are now available and the population of chicken is about 56 million. The forest area of Turkey is estimated at 20.2 million ha.

Table 1 Distribution of Cultivated Areas, 1982

Crop	Area (1,000 ha)	Percentage cultivated area
Cereal	13 771	48.2
Fallow	8 367	29.3
Pulses	515	1.9
Industrial crops	1 969	6.8
Fodder crops	350	1.3
Orchards and gardens	3 585	12.5

In 1980, 81% of the total farm holdings were less than 10 ha. In spite of a rapid mechanization the average size of farm holdings has not increased. Rather, fragmentation of farm holdings is still a major problem.

Project and Investments

After 1960 the targets planned for agriculture were attained. About 50% of agricultural investments was spent for irrigation. From 1963 to 1981, agricultural land of 1.6 million ha could be irrigated. Some 55% of Turkey's population is engaged in agriculture. Currently, a large irrigation project is being constructed in the south-eastern part of Turkey. When this project is completed, it will be possible to irrigate 1.8 million ha agricultural land.

Each year about half of the cultivated area is left for fallow due to the shortage of irrigation water. Recently, the fallow area was reduced to 33% of the total cultivated area and some pulses are now grown on the fallow area. This reduction in fallow area is supported by the Ministry of Agriculture.

Agricultural Mechanization

In Turkey it may be said that agricultural mechanization actually started only in 1950. After this year many tractors and various agricultural machinery and equipment were introduced into the farms. Between 1950 and 1960 the cultivated area was expanded to about 60% and in the same period the increase in the number of tractors was 250% which by then numbered about 40000 units.

Up to 1960 farm machinery and equipment used in farming were imported, although an agricultural supply organization was established in 1944. At the end of the 1950s the production of tractor began under license. Currently, 11 firms are manufacturing tractors in Turkey and there are about 600 thousand units of tractors in the tractor park, mostly of the medium and medium-small sized ones. After 1960 the number of the domestic farm machinery manufacturers increased and in 1979, the number of manufacturers was 986. In recent years, some farm machinery and equipment began to be exported, although the number of the manufacturers decreased because of declining local demand.

Table 2 Distribution of Agricultural Machinery and Equipment, 1984

Machine and Equipment	Number
Wooden plow	765 349
Moldboard type tractor plow	473 380
Disc type tractor plow	81 544
Cultivator	240 176
Disc-harrow	99 344
Spike tooth harrow	357 133
Hay rake	78 123
Tractor drawn hoe	83 787
Tractor drawn grain drill	110 560
Combine drill	69 387
Beet planter	10 343
Manure spreader	1 450
Fertilizer spreader	113 711
Baler	7 161
Thresher	118 955
Combine harvester	13 497
Potato harvester	1 328
Beet harvester	1 784
Tractor mower	10 788
Duster	41 384
Centrifugical pump	64 650
Motor pump	251 944
Sprinkler	49 764
Egg incubator	1 273
Trailer	495 340
Tractor	556 781

Table 2 shows the number of agricultural machinery and equipment in 1984.

Most of the farm holdings have financial problems and credit opportunities are very limited Some 97% of credit in agriculture is supplied by the T.C. Ziraat Bankasi (Agricultural Bank of Republic of Turkey). To be able to get credit for the purchase of machinery, farmers should have collaterals of which few of them have.

Conclusion

The government should: i) put controls in the manufacture of tractors; ii) provide credit at reasonable rates to enable most farmers to buy farm machineries and equipment; iii) explore export markets for tractors; and define farm policies affecting farm mechanization.

Agricultural Engineering Potential in Caribbean Basin

by
Megh R. Goyal
Associate Agric. Engineer
Fortuna Res. and Dev. Center
HC-02-Box 7115
Juana Diaz, PR 00665-9601
U.S.A.

Abstract

Agricultural engineering research includes areas such as soil and water management, drainage, energy, machinery, air quality, processing, waste management, rural electrification, aquaculture and food engineering. Additional topics include microelectronic applications in agricultural mechanization in the Caribbean basin and Puerto Rico. Also, it highlights the prospects and needs in the above areas for the eastern, northern, western and southern Caribbean countries.

Caribbean Basin

Caribbean Sea

An arm of the Atlantic Ocean, it is a warm, tropical body of water that lies between two great land masses: North America and South America. It is a suboceanic basin (2 640 000 sq. km) lying between 9° to 22° N and 60° to 89° W with an east-west length of 2400 km and north-south average width of 800 km, and with its greatest depth of 7125 m off the Cayman Islands. The sea is bordered by Central America and Mexico on the west; by the Isthmus of Panama, Colombia and Venezuela on the south; by the Lesser Antilles extending from the Virgin Islands to Trinidad on the east; and by the Greater Antilles extending from Cuba to the Virgin Islands on the north. Within the boundaries of the Caribbean Sea, Jamaica is the largest of a number of islands. The preferred oceanographic term for the Caribbean Sea is the Antillean-Caribbean Sea, which together with the Gulf of Mexico, forms the Central American Sea. Coral reefs fringe most of the islands.

Location

The Caribbean Basin countries are geographically located between 4°13′ S to 27°25′ N and 52° to 92°13′ W covering a land area of 3 271 609 sq. km which constitutes 2.18% of the world total. The Caribbean Basin includes 35 countries (Fig. 1) which are located at the outer periphery of the Caribbean Sea.

Caribbean Basin Countries

The Greater Antilles (North) – 222 142 sq. km or 6.79% – The

Fig. 1 Caribbean countries.

Note: This paper was presented at the First Pan American Congress on Agricultural Engineering held at Caracas, Venezuela Oct 28-Nov 2, 1984 and sponsored by Pan American Association of Engineers (UPADI). Approved for publication as Journal article No. 84-84 by the Agricultural Experiment Station, UPR.

Bahamas, Cayman Islands, Cuba, Dominican Republic, Haiti, Jamaica, Puerto Rico, Turks and Caicos Islands, Virgin Islands (British), Virgin Islands (US: St. Thomas, St. John, St. Croix).

The Lesser Antilles (East) – 9749 sq. km or 0.298% – 1. Leeward islands: Anguilla, Antigua and Barbuda, Montserrat, St. Kitts (Christopher) – Nevis. 2. Windward islands: Dominica, Grenada, Martinique, St. Lucia, St. Vincent and the Grenadines; and Others: Barbados, Guadeloupe, Trinidad and Tobago.

North coast of South America (South) – 2 518 485 sq. km or 76.98% – Colombia, French Guiana, Guyana, Netherlands Antilles (Aruba, Bonaire, Curaçao; Saba, St. Eustatius, St. Maarten), Venezuela.

Central America (West) – 521 233 sq. km or 15.932% – Belize (previously British Honduras), Colombia, Costa Rica, El Salvador, Guatemala, Honduras, Nicaragua, Pananà.

Population

Of the 109 302 000 people who live in the Caribbean Basin, 39.757% live in the southern Caribbean; 25.048% in the Greater Antilles; 21.8% in the western Caribbean and 13.39% in the Lesser Antilles. Of the total land area, 3 271 609 sq. km, 76.98% belongs to southern Caribbean; 15.932% to the western Caribbean; 6.79% to the Greater Antilles; and 0.298% to the Lesser Antilles. Of the world population, 2.39% lives in the Caribbean Basin which comprises 2.18% of the land of the world. The population density (persons per sq. km) varies from 0.9 for French Guiana to 590.7 for Barbados, compared to 33.6 for the world. Ten countries have a population density of more than 200. The percentage destribution of urban population varies from 20.4 for Haiti to 73.1 for Venezuela. Literacy varies from 8.00 to 97.5%.

Climate

The climate of the Caribbean Basin is truly tropical and is characterized by moderately high temperatures (22 to 33° C) and easterly and northeasterly winds, but there are great local variations depending on mountain altitude, water currents, and the trade winds. Annual rainfall varies from 1000 cm in parts of Dominica to only 25 cm in the coastal area of Venezuela. The pacific coast is drier than the coast of the western Caribbean. The windward facing slopes and shores have higher annual rainfall and humidity than the leeward sides of the islands. The northeast trade winds dominate the region with an average velocity of 16 to 32 km/h. Tropical storms reaching a hurricane velocity of more than 120 km/h are seasonally common in the eastern and northern Caribbean as well as in the Gulf of Mexico, but are almost non-existent in the southern Caribbean. The hurricane season is from June to November and these occur frequently in September. The yearly average is about 8 storms a year. Most hurricanes formed in the Caribbean follow the arclike path of the trade winds into the Gulf of Mexico although the exact path of any hurricane appears unpredictable. In 1963 hurricane Flora caused the loss of over 7000 lives and $528 million of damage in the Caribbean alone. Such storms have also been a major cause of crop failure in the region.

Vegetation

Where the vegetation of the Caribbean region is generally tropical, variations in topography, soils, rainfall, humidity, and soil nutrients have made it diverse. The porous limestone terraces of the islands are generally nutrient poor. Near the seashore, black and red mangroves form dense forests around lagoons and estuaries. Coconut palms typify the sandy vegetation of the littoral. On the dry side of each island, succulents and cactus plants are common. Rain forest prevail on the islands having sufficient altitude, for example, Cuba, Jamaica, and Puerto Rico.

The Caribbean region has a diversity of land fauna, which is unevenly distributed. The solenodon, a shrew-like insectivore, is found only in Cuba and Hispaniola. Cuba also has an atelopidid (brightly coloured and poisonous) species of frog, a xanthusid (nocturnal carnivorous) species of lizard, as well as a relict species of cycad (a plant intermediate in appearance between a jem and a palm). Puerto Rico has a species of endemic rodent. The Central American states bordering the sea also have a great diversity of land plants and animals. The three-toed sloth, cats, marsupials, and monkeys abound in the forests, as also do snakes and other reptiles not usually found on the islands. Both the Central American region and the Antillean islands are on the routes of birds migrating to or from North America, so that large seasonal variations occur in the bird populations. Parrots, parakeets, and toucans are typical resident Caribbean birds; the frigate bird is also seen frequently.

The shallow-water marine fauna and flora of the Caribbean are far more homogeneous than are those of the land. Marine life in the shallows centres around the submerged fringing coral reefs, which attract assemblages of fishes and other forms of marine life. Coral reef growth throughout the Antillean region is favoured by uniformly warm temperatures, clear water, and little change in salinity. Submerged fields of turtle grass are found there. Sea turtles of several species, the sea cow, and the Manta ray (devilfish) are

also characteristic of the region. Throughout the Caribbean, the spiny lobster is harvested, sold mainly in the markets of North America.

Fishes of commerce are the sardine from Yucatan, and the tuna fish. Among common game fish are the barracuda, dolphin, marlin and wahoo. Fishing is practiced in all the region.

Economic Resources

As a result of the interplay of many factors with geography, each country developed differently. Some islands, such as Barbados, St. Kitts, Antigua, and Martinique, produce sugar on huge foreign owned or locally owned private plantations, while in others, such as Grenada, St. Vincent, Guadeloupe, and St. Lucia, new plantation crops such as bananas and long staple cotton have been introduced, and peasant crops such as nutmgegs, arrowroot, cocoa, coconuts, pineapples, and citrus fruits earn income for small landowners. Cuba has nationalized its sugar estates, not wothout considerable cost in output per year, and most of the other governments hold substantial percentages of arable land as well as stock in banana estates, bauxite mines and processing plants, oil wells and refineries, and other large scale agriculture and industry.

The economic resources of the Caribbean countries are few. Therefore, industrialization is restricted to one or two countries. Coffee-producing countries include Colombia, El Salvador, Guatemala, Costa Rica, Nicaragua, Honduras, Dominican Republic, Haiti, Cuba, Puerto Rico, Venezuela, and Trinidad and Tobago. Banana-exporting countries include Honduras, Costa Rica, Panama, Colombia, Martinique, Jamaica, Guatemala, and Guadeloupe. Most other Caribbean countries are minor producers. Cuba, the Dominican Republic, Jamaica, Colombia, Trinidad and Tobago, Guadeloupe, Barbados, Venezuela, and other countries export sugar. Altogether these three products account for 28 to 72% of the total exports of each individual country in the region with the exception of Venezuela. Among the minerals mined are gold in Nicaragua and Colombia; silver and antimony in Honduras; and manganese in Cuba. Venezuela, the richest Caribbean country in terms of natural resources, produces 8% of the world's oil supply. With its iron reserves and hydro-electric potential, it also has prospects

Table 1. Land Distribution in the Caribbean Basin

Country	Land area ha	Cultivatable ha	%	Land holding, ha range	avg.	Forest ha
Anguilla	9,000	1,215	13	0.2–1.2	0.2	–
Antigua & Barbuda	44,200	7,287	16	–	–	1,619
Bahamas, The	1,386,400	–	–	–	–	323,886
Barbados	43,000	28,340	66	0.2–4.0	–	38
Belize	2,296,500	–	–	–	–	1,657,522
British V.T.	15,300	–	–	–	–	–
Cayman Island	26,400	–	–	–	–	–
Colombia	114,174,800	–	–	–	–	69,959,000
Costa Rica	5,110,000	1,821,862	36	–	36.4	4,088,000
Cuba	11,092,200	9,077,086	82	0.9	0.6	25%
Dominica	75,000	40,485	54	2-200	4.5	36,275
Dominican Republic	4,844,200	2,526,000	52	0.9	0.6	85,000
El Salvador	2,104,100	–	–	–	–	–
French Guiana	8,353,300	–	–	–	–	7,517,970
Grenada	34,500	–	56	–	–	4,049
Guadeloupe	178,000	44,500	25	–	–	44,500
Guatemala	10,888,900	3,201,337	29	0.5–7	8.3	6,533,340
Guyana	21,500,000	–	–	–	–	18,317,652
Haiti	2,775,000	–	–	–	–	–
Honduras	11,208,800	2,802,200	25	–	–	5,043,960
Jamaica	1,099,100	–	–	–	–	267,206
Martinique	110,000	30,800	28	–	–	27,500
Montserrat	10,200	1,809	18	–	–	2,024
Netherlands Antilles	99,300	–	–	–	–	–
Nicaragua	12,766,200	3,957,522	31	–	–	–
Panama	7,708,200	1,803,502	–	–	–	–
Puerto Rico	895,800	750,355	84	–	–	37,101
St. Kitts-Nevis	26,100	–	–	–	–	–
St. Lucia	62,200	33,223	53	–	–	8,097
St. Vincent & The Grenadines	38,800	11,514	30	–	–	6,073
Suriname	16,382,000	105,830	1.0	2–50	6.5	13,105,600
Trinidad & Tobago	512,800	146,964	29	–	–	230,760
Turks & Caicos Islands	50,000	–	–	–	–	–
US Virgin Islands	34,500	10,350	30	–	30.6	–
Venezuela	91,205,500	2,097,727	2.3	–	5.2	–

Bland spaces indicate that data is not available.

Table 2 Livestock Population

Unit:1000

Country	Year	Cattle	Pig	Poultry	Goats & Sheeps		Others
Anguilla	–	Y	Y	Y	Y	Y	–
Antigua & Barbuda	–	Y	Y	Y	–	–	–
Bahamas, The	–	–	Y	Y	Y	–	–
Barbados	–	Y	–	–	–	–	–
Belize	78	45	Y	Y	–	–	–
British V.I.	–	Y	–	–	Y	Y	Horses/mules/donkeys
Cayman Islands	76	Y	Y	Y	–	–	200 hives, turtle (30)
Colombia	81	24,499	2,179	33,000	657	2,749	Horses 1710
Costa Rica	81	2,275	240	5,300	–	–	Horses 240
Cuba	82	6,200	2,000	26,173	101	375	Horses (829)
Dominica	–	Y	Y	Y	–	–	–
Dominican Republic	81	2,155	–	8,300	385	55	Horses (204)
El Salvador	81	1,211	386	5,050	Y	Y	Horses 88
French Guiana	72	8	6.3	50	–	–	–
Grenada	76	6	10	250	15	–	–
Guadeloupe	76	70	30	–	27	–	–
Guatemala	70	1,664	670	Y	90	703	Horses 165, mules/asses 63
Guyana	76	284	Y	4,200	30	90	Horses/mules/donkey 6
Haiti	81	1,200	600	–	1,000	90	Horses (415)
Honduras	81	2,336	580	4,900	Y	Y	Horses 151
Jamaica	81	305	260	4.300	390	–	–
Martinique	–	Y	Y	–	Y	Y	–
Montserrat	72	1.8	2.2	16.8	2.8	3.0	–
Netherlands Antilles	81	45	22	1,100	7	–	–
Nicaragua	81	2,301	510	4,800	Y	Y	Horses 270
Panama	81	1,604	202	5,195	Y	Y	Horses 166
Puerto Rico	81	488	230	16,327	Y	Y	Horses 220
St. Kitts-Nevis	–	Y	–	–	–	–	–
St. Lucia	67	11	18	50	5	8	Horses/mule/donkey 2.5
St. Vincent & The Grenadines	–	Y	–	–	–	–	–
Suriname	–	Y	Y	Y	Y	Y	Horses
Trinidad & Tobago	81	78	60	7,500	47	–	Donkeys
Turks & Caicos Islands	–	Y	Y	Y	–	–	–
US Virgin Islands	–	Y	–	–	–	–	–
Venezuela	–	Y	Y	Y	Y	Y	–

Y indicates that data is not available.

for industrialization. Aruba and Trinidad refine and export oil. Jamaica, the Dominican Republic, and Haiti are the sources of about 22% of the world's bauxite. Jamaica and the Dominican Republic also produce gypsum. Fishery and agricultural products are used mostly for domestic consumption. Much farming is on a subsistence basis.

Tables 1, 2 and 3 indicate the status of agricultural development. The Caribbean has a complex pattern of trade and communication. The volume of trade per capita is high, but most of this trade is conducted with countries outside the Caribbean. Each Caribbean country tends to trade with countries elsewhere that share a common languague. Cuba, an exception, trades with a variety of countries. Its trade with Communist bloc countries accounts for three quarters of the total. Intra-Caribbean trade is small, because of limited industrial resources and the monocultural economic pattern. Goods and commodities exchanged within the Caribbean economy are few: rice from Guyana; lumber from Berlize; refined oil from Trinidad and Curaçao; salt, fertilizer, vegetable oils, and fats from the eastern islands; and a few manufactured products. Shortage of capital and limited natural resources discourage industrial development. Markets for most Caribbean products are the United States and Canada, which import bananas, sugar, coffee, bauxite, rum and oil. All of the Atlantic-Pacific shipping using the Panama Canal passes through the Caribbean.

It is anticipated that emergent local nationalism will lessen the prospects for future unions or federations that could foster diversification and industrialization. A continuation of the monocultural economic pattern appears likely for some time to come.

Puerto Rico

Occupying a central position among the West Indian islands, Puerto Rico rises sharply from the tropical sea and its coastal plain quickly ascends to meet the steep mountain ranges that give the island the appearance of a nearly rectangular pyramid with a base length and width of 160 and 56 km, respectively. The fertile coastal plains in the north are about 19.2 km wide and extend the whole length of the island; 3.2 to 12.8 km wide in the south; and 8 to 1.28 km in the east. The west coast is irregular and precipitous in places where the mountains run right down into the sea. The highest peaks are Cerro Punta (1319 m), Jayuya (1268 m) and Tres Dias (1228 m) located in the south central area. Nearly half of the island lies 150 m or more above sea level; 20% between 150-300 m, and 25% more

Table 3 List of Major Agricultural Products Produced in the Caribbean Basin.

Unit: 1 000 t

Country	Year	Production of Major Agricultural Commodities
Anguilla	–	Pigeonpea, corn, sweet potato, sorghum, back yard vegetables
Antigua	–	Sugarcane, cotton
Bahamas, The	–	Banana, pineapple, tomato, onions, avocados
Barbados	76	Sugar raw 770, yams, vegetables, bananas, W.I. cherries, guava, mango, avocado, cotton
Belize	77	Rice 8, corn 30, sugarcane 92, citrus 9 million boxes, vegetables 0.5, root crops
British V.I.	–	Sugarcane, limes, banana, coconut, mango
Cayman Islands	–	Mango, citrus, avocados, bread fruit, coconut
Colombia	82	Cotton lint 33, rice 1954, banana 1274, coffee 840, raw sugar 1317, potato 2000, corn 895, sorghum 665, cassava 2150, soybean 94, plantains 2400, palm oil 95, tomato 251
Costa Rica	82	Sorghum 45, corn 88, rice 210, potatoes 29, banana 1150, orange 77, raw sugar 195, coffee 113, cocoa 6, palm oil 24
Cuba	82	Rice 480, cassava 330, sweet potato 330, tomato 226, sugar 8207, banana 169, oranges 400, coffee 21, tobacco 45, jute 11, fish catch 165, beef and veal 153
Dominica	–	Banana, coconut, spices, limes
Dominican Republic	82	Rice 284, sweet potato 85, cassova 180, sugar raw 1220, dry beans 50, tomatoes 160, peanuts 36, oranges 182, banana 330, plantains 625, cocoa 32, coffee 57, tobacco 31
El salvador	82	Corn 479, sorghum 137, dry beans 37, sugar raw 185, banana 53, oranges 100, coffee 143, cotton lint 42
French Guiana	–	Banana, root crops, corn, tobacco, sugarcane, rice
Grenada	75	Copra 447, cotton lint 0.015, nutmeg 2085, sugar raw 16, food crops
Guadeloupe	76	Banana 50, cocoa 0.5, sugarcane, vegetables
Guatemala	75	Coffee oil, cotton 0.2, banana 11.9, corn 20, beans 3.3, potatoes 1.2, vegetables 3.8, sugar raw 92, wheat 1, rice 1, grand total 809
Guyana	74	Sugar raw 163, rice, coconut, citrus, cocoa
Haiti	82	Rice 105, corn 180, sorghum 110, sweet potato 270, cassava 255, sugar 52, dry bean 50, banana 210, plantains 310, mangoes 335, coffee 28
Honduras	82	Corn 509, sorghum 58, sugar raw 220, dry beans 42, banana 1338, plantains 170, orange 28, pineapple 37, palm oil 8, coffee 82, beef & veal 50, tobacco 8
Jamaica	82	Copra 7, sugar raw 197, banana 100, oranges 57, sweet potato 25, yam 160, cassava 26
Martinique	76	Sugarcane 56, banana 240, fruit, flowers, tobacco, market gardening
Montserrat	76	Cotton lint 0.032, lime, vegetables
Netherlands Antilles	82	Rice 280, oranges 7, grapefruit 2, banana 40, sugar raw 10, (all agric. produce is imported)
Nicaragua	82	Corn 164, rice 65, sorghum 84, dry beans 60, sugar raw 193, banana 157, oranges 54, cotton seed 6
Panamá	82	Rice 150, corn 7.0, sugar raw 187, mangoes 27, bananas 1100, oranges 64, coffee 8
Puerto Rico	81	Sugar raw 2038, coffee 15, cidra 4.5, pineapple 42, tobacco 0.8, ñame 16, yautía 12, vegetables 34, pigeon peas 6.4
St. Kitts-Nevis	77	Sugar raw 352, cotton, vegetables
St. Lucia	73	Copra 6.7, banana, citrus, vegetables
St. Vincent and The Grenadines	77	Arrowroot 0.8, copra 2.8, sugarcane 33.8, starchy roots 8, nutmeg 0.14
Suriname	74	Rice 89.8, citrus, coffee, cocoa, sugarcane, banana, food crops
Trinidad and Tobago	82	Sugar raw 79, rice 26, tomato 10, grapefruit 4, copra 8, coffee 8, cocoa 3
Turks & Caicos Islands	–	Subsistence farming, vegetables
US Virgin Islands	–	Sugarcane, sorghum, mango, banana, vegetables
Venezuela	82	Corn 501, rice 670, sorghum 337, potato 216, cassava 360, sugar raw 367, tomato 135, sesame 53, banana 926, oranges 370, coffee 59, cocoa 15

than 300 m above. It is a well-watered island with a great number of rivers which are not navigable but are good for irrigation. The rivers have eroded the northern slopes. The south-running rivers are short and torrential, but they are dry most of the time. The east-west mountains form a barrier to the dominant east-to-north-easterly winds, giving the north an abundance of rain (162 cm). On rising over the cordiller central, the warm humid air mass cools and losses much of its moisture so that the rain on the southern coast is scarce (60-100 cm) and a dry climate predominates. Average temperature varies from 16 to 32°C.

Population

Puerto Rico's population is predominantly young with a median average of 22.2 years for women and 24.4 years for men. About 65% of the Puerto Ricans lived in urban areas in 1983, compared to 60% in 1980 and 44% in 1960. Estimates of population in the year 2000 range from 3.7 to 5.0 million. In spite of a 22% unemployment rate and critical shortage of adequate housing, Puerto Ricans enjoy the highest per capita personal income and the highest standard of living in the Caribbean Basin. Puerto Rico is deeply committed to the expansion of public education. Illiteracy has been reduced from more than 30% in 1940 to less than 10% by 1980.

Agriculture

Income from manufacturing surpassed that from agriculture in 1955, and by 1978 was nine times greater. The agriculture sector employed 833 000 ha of agricultural

land, 141 013 ha was cultivated, compared to 353 860 ha for pasture land, 37 100 ha for reserve forests, and 154 913 ha of abandoned land. The gross farm receipts in 1980-81 totals $601.9 million, 4% above the revised total of $579.7 million for 1979-80. The breakdown in 1980-81 was $216.6 million for crops; $341.5 million for dairying, $6.0 million for fish farming; and $37.8 million for subsidies and incentive payments. Net income in the agricultural sector totalled $402.9 million in 1980-81. Livestock included 488 600 head of cattle, 230 311 pigs, 220 horses, 16.3 million chickens. Sugarcane production was 2.0 million t on 32 805 ha in 1980-81 compared to 10.6 million on 153 028 ha in 1949-50, while the number of sugarcane mills decreased from 35 to 7 during the same period. Coffee production was 15 000 t with an acreage of 41 270 ha in 1980-81, compared to 12 358 t with an acreage of 66 698 ha in 1958-59. Plantain and banana production was 1.05 million fruits in 1980-81 compared to 0.85 million fruits in 1957-59. Ñame and yautía production was 28 000 t in 1980-81 and 30 750 t in 1957-58. Pumpkin, pepper, cabbage and tomato production was 34 250 t in 1980-81 and 31 450 t in 1957-58. Orange production decreased from 173 million fruits in 1957-58 to 162 million fruits in 1980-81. Avocado production was 14.2 million fruits in 1980-81 compared to 22.5 million fruits in 1957-58. The number of coconuts harvested was 19 million in 1957-58 and only 13 700 in 1980-81. Processed and fresh pigeon pea available was 7 600 t corresponding to local production. On 1 232 ha, 42 368 t of pineapples were produced in 1980-81. Tobacco production decreased from 12.8 thousand t in 1958 to 0.8 thousand t in 1980.

Fisheries

Puerto Rico has 20 artificial lakes with a total surface area of 2 267 ha and 18 streams. Fish farming on a smaller scale is growing and there are over 400 ponds ranging from 0.5 to 2 ha. The Department of Agriculture provides the farmer with fishery for stocking the ponds as well as further technical assistance. Deep sea fishing as a sport has developed since the end of World War II. Bill fish and tuna are the species most sought after. In 1930, the catch in the salt water commercial fisheries was estimated at 1360 t with a value to the fisherman of $0.2 million. After World War II the conditions of the industry started to improve with the motorization of fishing crafts and with the establishment of two freezer houses at Cabo Rojo and Fajardo to facilitate greater shipments of fish to San Juan. Until 1958, there was no significant expansion of the industry in spite of the increasing demand and the Fishery Development Program. The program provided loans for marine engines, fishing gear, freezing and transportation units; vocational training of fisherman in fishing technology, motor maintenance, small boat building and navigation; the establishment of better shore facilities for the fishermen and for the distribution and marketing of their catch; and the provision of technical assistance for the industry. This program has increased the production to 3600 t per year.

Agricultural Engineering

Potential Problem Areas

Agriculture in the Caribbean Basin is characterized by low farm income, small farm holdings, low cost labor and lack of technical know-how. The farmers' purchase and utilization of equipments is largely influenced by his economic status, insufficient mechanical knowledge and training, non-existence of reasonable distribution systems, lack of service and maintenance, lack of availability of parts, inadequate credit facilities, poor transport and marketing facilities. The following bottlenecks, characteristic of the Caribbean Basin, should be taken into consideration before planning a blueprint for the technology transfer:

1. Confusion between "Ingeniero Agrónomo" and "Ingeniero Agrícola". "Ingeniero Agrónomo" is not an engineer and does not have engineering background.
2. Recognition of agricultural engineering as a profession itself.
3. Agricultural engineering profession may well turn out to be an inconvenient competitor in respect to other professional groups.
4. Agricultural engineers, in sufficient numbers, are not available for the needed technology transfer.
5. Lack of adequate continuing education and updating.
6. Lack of adequate training for agricultural engineers within an environment existing in the region.
7. No graduate level training exists in this area.
8. Knowledge of most advantageous cultural methods and livestock enterprises is incomplete for the region.
9. Agricultural engineers can be successful in the technology transfer only with knowledge of on-site tropical agriculture.
10. Technical know-how is greatly dependent upon foreign-based technologies designed for industrialized nations and needs to be adapted to local conditions.
11. Presently, a great deal of work is carried out by outside

professionals.

12. Survey for the number of agricultural engineers needed in the technology transfer is a must.
13. Caribbean agriculture is characterized by low farm wages and is labor intensive.
14. High population density in most regions.
15. Inflation, taxes, import taxes and transport costs make the technology transfer more expensive.
16. Tropical climate might reduce worker efficiency and might cause more stress.
17. Lack of fund facilities and qualified engineers.
18. Hurricane winds, rain of longer duration and greater intensity, temperature and humidity variations in the region do not allow direct use of farm building data of other locations.
19. Labor for agriculture is diminishing as more families are migrating to urban areas for better opportunities and higher wages.
20. Labor productivity is low.
21. Shallow soil with abundance of rocks, steep terrain and small holdings need special tillage practices.
22. Because of labor intensive operations, locally produced products are more expensive than imported products.
23. Network of channels, embankments and structures are not maintained properly.
24. Cultural practices in the Caribbean region are different.
25. Equipment safety education is almost non-existent.
26. Mechanical harvesting is hazardous for 10-15% slopes and is difficult for 4-6% slopes.
27. Lack of distribution and service facilities by equipment dealers.
28. Lack of fruit and vegetable processing facilities.
29. Existing machines may be too sophisticated and expensive for local farmers.
30. Harvesting costs need to be reduced by use of modern technology.
31. Most root crops are planted manually.
32. Porous sandy soils are excellent for farming but need irrigation which is not always available.
33. Transportation of agricultural products from hilly areas to coastal areas and cities.
34. Lack of a combined knowledge of recent developments and practical field experience affects adaption of existing machines to local needs.
35. Mechanization of forest cultivation is almost non-existent.
36. Extension measures must educate in the application of new farming skills and expertise.
37. Marketing systems especial ly storage/transportation/crop grading methods, need to be upgraded.
38. The speed with which land can be converted to the new technology-based agriculture depends on the rapidity with which new irrigation facilities can be constructed. The high capital cost of present-day irrigation systems can be a retarding factor.
39. Rate of adoption of new technology by peasant farmers (who form the bulk of farming community) is likely to be slow.
40. Considerable time is needed to change from traditional export crops to the production of other crops for domestic consumption.
41. Conservation and use of hillside land is necessary. There are no safety standards and regulations to cover health and safety hazards on the farm.

Regional Research Priorities

Research priorieties in the areas of soil and water management, power and machinery, electric power and processing, food engineering, forest and aquaculture engineering are listed below. In addition, there may be other topics depending upon local needs:

1. Soil water conservation research on equipment, structure and techniques for reducing erosion and controlling runoff, as well as some new developments in drainage pipe and use of laser beams in laying it.
2. Conservation of water use.
3. Remote sensing for study of crop and soil conditions.
4. Improvement of crop production methods.
5. Soil moisture flow characteristics in the coastal and central areas.
6. Aquifer recharge studies.
7. Ground water resource management.
8. Design drainage standards for different crops.
9. Irrigation requirements for various crops.
10. Water and land resource management using systems approach.
11. Hydrological data for each area.
12. Drainage, physical, mechanical properties of agricultural soils.
13. Water balance and rainfall-runoff hydrographs.
14. Use of soil survey maps for better crop management.
15. Mechanized harvesting of fruits, vegetables, and root crops.
16. Sugarcane harvester suitable to local varieties and management practices.
17. Pesticide application equipment.
18. Animal drawn root crop planter.
19. Psychoenergetic research.
20. Alternate energy resources.
21. Use of farm by products/wastes.
22. Shaping and trimming of trees.

APPENDIX I	Agriculture supporting agencies and Agricultural Development Schemes
Anguilla:	State Department of Agriculture; Pasture and Livestock Improvement Scheme; The Fisheries Department;
Antigua:	Ministry of Agriculture; Lands and Fisheries; Antigua Agricultural and Commercial Society; Central Experiment Station;
Bahamas, The:	Department of Agriculture and Fisheries.
Barbados:	The National Housing Corporation and Agricultural Development Corporation; The Organization of American States; The Ministry of Agricultural Society; The Barbados Marketing Corporation; Sugar Production and Export Control Board; Government Fisheries Department, The Bellairs Institute at Sandacres-St. James; FAO;
Belize:	The Lands Department; Department of Agriculture; Marketing Board, CORICOM; CIDA; The Sugar Board; The Citrus Control Board; The Banana Control Board; CDB; The Fisheries Unit of the Ministry of Trade and Industry; The Fisheries Advisory Board; The Forest Department;
British Virgin Islands:	Agricultural Credit and Pasture Improvement Scheme; CDB; UNDP, Department of Agriculture;
Cayman Islands:	Registrar of Lands; The Agriculture Department; The Cayman Islands Agricultural Society; The Horticultural Society; University of West Indies; FAO; Governmental Experiment Farm;
Colombia:	Colombian Institute of Agrarian Reform; Instituto de Fomento Algodón;
Costa Rica:	Consejo Nacional de Producción; Inter American Institute of Agricultural Sciences; Chamber of Coffee Growers; Ministry of Agriculture; University of Costa Rica;
Cuba:	National Institute of Agricultural Reforms;
Dominica:	The Division of Agriculture; Central Livestock Farm; Hillsborough Propagation Station; Dominica Agricultural Society; OXFAM;
Dominican Republic:	Department of Agriculture;
El Salvador:	UN Central American Development Program; Ministry of Agriculture; Centro Nacional de Agronomía;
French Guiana:	SATEC; Land survey Bureau; Chamber of Agriculture Forest Department;
Grenada:	Ministry of Agriculture; Cocoa Industry Board;
Guadeloupe:	Department of Agriculture; Agricultural Credit Bureau; Association of Banana Producers; Center of Agronomical Research; Institute of Tropical Fruits; National Forest Service; SICOP;
Guatemala:	Ministry of Natural Resources; National Institute of Commercial Agriculture (INDECA); Asociación Nacional de Café; The Central American Institute of Research and Industrial Technology;
Guyana:	Caribbean Fisheries Training and Development Institute; Ministry of National Development & Agriculture; Guyana School of Agriculture; Guyana Rice Board; Guyana Sugar Corporation; The Cane Farming Development Corporation Ltd.; Conservator of Forest; Guyana Marketing Corporation; Guyana Rice Corporation; Upper Demerara Forestry Project; Caribbean Community (Caricam);
Haiti:	Ministry of Agriculture;
Honduras:	Cooperative Rural Development Service; Ministry of Natural Resources; Pan American Agricultural Schools;
Jamaica:	Cocoa Industry Board; Coconut Industry Board; Coffee Industry Board; Ministry of Agriculture/Fisheries/Rural Land Development; Growing and Reaping our wealth scheme (GROW); Agricultural Research Station; Agricultural Marketing Corporation; Jamaica Agricultural Society; Agricultural Development Corporation; Agricultural Credit Board; Banana Board; Citrus Development Loan Board;
Martinique:	The Department of Agriculture; Chamber of Agriculture; France Institute of Fruits Research, Institute of Tropical Agriculture Research;
Montserrat:	The Department of Agriculture; Forestry Board;
Netherlands Antilles:	Caribbean Marine Biological Institute;
Nicaragua:	Banco Nacional de Nicaragua; Instituto de Fomento Nacional;
Panamá:	–
Puerto Rico:	Caribbean Regional Library; University of Puerto Rico; Department of Agriculture; PR Soc. of Agric. Sciences; PR Section of ASAE; Caribbean Food Crops Society; Institute of Tropical Forestry;
St. Kitts-Nevis:	The Department of Agriculture;
St. Lucia:	St. Lucia Agricultural Bank; St. Lucia Agriculturists' Association Ltd; Marketing Development Board;
St. Vincent:	Ministry of Trade and Agriculture; St. Vincent Agricultural Development Corporation; Windward Islands Banana Association; St. Vincent Marketing Corporation;
Suriname:	Agricultural Credit Bank; Suriname Citrus Central; Fisheries Foundation;
Trinidad and Tobago:	Ministry of Agriculture; Industry and Commerce; Agricultural Society of Trinidad & Tobago; Eastern Caribbean Farm Institute; Association of Professional Agrologists; Cocoa and Coffee Industry Board; Cane Farming Arbitration Board; Fishing Industry Association; Conservator of Forest; University of West Indies; UN Information Center for Caribbean;
Turks and Caicos Islands:	–
US Virgin Islands:	The Department of Agriculture; College of Virgin Islands; Dorothea Agricultural Experiment Station; Marine Biological Laboratory;
Venezuela:	An Agrarian Reform Program; Ministry of Agriculture and Livestock; Banco Agrícola y Pecuario; Instituto Agrario Nacional; Agricultural Marketing Corporation; PRIDA; 5-V Agricultural youth organization;

23. Selection of seed varieties good for mechanization.
24. Pigeon pea harvester, thresher.
25. Coconut harvester, dehusker.
26. Coconut penetration characteristics.
27. Effects of high temperature and drying winds on strength and durability of farm structures of concrete.
28. Improvement of rural dwellings, rural living conditions.
29. Controlled storage facilities for fruits/vegetables.
30. Rheological properties of selected crops peculiar to the area.
31. Evaluation of grain storage bins.
32. Evaluation soils and hay storages.
33. Livestock environment research: wind and solar radiation simulation; milk production; animal production; heat transfer; total and latent heat loads in dairy farms.
34. Computer simulation to optimize field operations.
35. Bioclimatic data.

(Continued on page 67)

Useful Gadgets for Manufacture of Low-Cost Agricultural Machinery

by
S.R. Verma
Dean
College of Agric. Engg.
Punjab Agric. Univ.
Ludhiana, India

Joginder Singh
Production Engineer
College of Agric. Engg.
Punjab Agric. Univ.
Ludhiana, India

Introduction

Punjab today is ahead of other states in India in the field of agriculture and its mechanization. The bulk of agricultural machinery such as ploughs, disc harrows, cultivators, seed drills, planters, sprayers, threshers, diggers, and combines are being manufactured in the small scale sector in the Punjab. There are more than 600 small scale manufacturers engaged in the fabrication and manufacture of these equipment. These equipment are not only being used by the farmers in the State but also being supplied to other states in the Union of India. The characteristics of a well-managed and efficient business are often hard to find in the small scale farm equipment manufacturing units, as these are mainly located in the small scale sector with low production capacity and seasonal nature of production. Most of these industries still do not employ standard production methods, which are a common feature in the large scale organized industries. Individual manufacturers employ production techniques of their own convenience resulting in lack of quality, standardization and inter-changeability of components. Major factors which prohibit the small scale manufacturers from producing standard quality farm equipment are non-standard designs, poor or no inspection, lack of technical awareness, limited investment and risk-bearing capacity, low volume of production, non-availability of required quantity of graded raw material and cut-throat competition.

This paper briefly discusses the details of some of the simple and time saving gadgets for the manufacture of low cost farm equipment in small scale industries. These gadgets have been found to improve the quality, precision, reliability, functional performance and interchangeability of the critical components of the agricultural machinery.

Small Scale Manufacturers

Major farm equipment are being manufactured in the small scale sector. These manufacturers are located in cities, towns and such places in the rural areas where essential facilities like water, power, raw material, etc. are easily available. The number of employees in these units varies from few persons to over hundred persons. Production methods in these units are quite labour-intensive. Furthermore, these units suffer from want of adequate technical know-how and investment. **Table 1** shows the typical facilities available in the shops owned by these units based on a survey conducted by the Department of Farm Power and Machinery, Punjab Agricultural University, Ludhiana. A total of 42 small scale manufacturing units were covered in the survey.

It is evident from **Table 1** that most of these units utilize conventional workshop machines, namely; lathes, shapers, planers,

Table 1 Common Workshop Machinery Available in Small Scale Farm Machines Manufacturing Units in the Punjab (Total: 42)

Name of machines (1)	No. of units owning the item mentioned in col. 1 (2)	Percentage of total number of units (3)
Lathe	41	97.61
Shaper	14	33.33
Planer	2	4.76
Drill	42	100.00
Grinder	21	50.00
Power press	18	42.85
Power hack-saw	10	23.81
Compressor	15	35.71
Power hammer	3	7.41
Spray painting equipment	11	26.19
Shearing machine	30	71.43
Welding set	42	100.00
Furnace	3	7.14

Note: Based on a survey conducted by the Department of Farm Power and Machinery, Punjab Agricultural University, Ludhiana, 1981.

drills, grinders, power presses, shearing machines, welding sets, etc. Various types of self-designed bending and cutting gadgets are also used by some manufacturers. Many of them use templates, jigs, fixtures, etc. Most of the owners of these units and their employees do not have formal technical education. The floor shop workers are unable to read even simple engineering drawings. However, many workers acquire high skills by virtue of their long job experience which enables them to fabricate various kinds of machines and their components. The tolerance, finish and interchangeability are the worst sufferers in the equipment made by these units. The reliability of the product varies from manufacturer to manufacturer. This can be attributed to lack of proper quality control, inspection and standardization in production methods.

Simple and Time-Saving Gadgets for Manufacture of Agricultural Machinery

The main manufacturing processes used in the hardware products are: casting, cutting, bending, forming, forging, machining, boring, drilling, grinding, welding, heat treating, painting, etc. Depending upon the design of a particular machine, all or some of the manufacturing processes are used for the production of various components employed in an implement. For the improvement in quality, cost reduction and interchangeability of components, many simple and low-cost gadgets for the manufacture of agricultural machinery have been developed. Pertinent details of these gadgets and devices are discussed in the sub-section that follows.

Hand and Power Shears

Common structural sections used in the construction of agricultural implements and machines are angle iron, flat, channels, square M.S. sheet, etc. In small artisan-type, these are cut into desired sizes with the help of cold chisels. However, in relatively larger factories, hand and power shears are used. **Fig. 1** shows the sheet cutting machine, wherein two high carbon steel rollers are used for the cutting operation. This can be power-operated or hand-operated as illustrated in **Fig. 2**. It can cut M.S. sheet up to 14 G thick sheet. This machine can be used for both straight cutting as well as round cutting. (**Fig. 3**). The sheet has to move about a centre pivot as shown. The use of such machines will result in greater production, economy and accuracy. Its production cost is about Rs. 3000.

Rollers Type Bending Machines

Fig. 4 shows a roller type bending machine for angles and flat. These sections can be bent into desired curvature by adjusting the gap between the rollers. The machine consists of a set of three rollers located as shown. The bottom set of rollers is driven at a slow speed depending upon the section of the angle or flat to be bent. The reduction in speed is achieved by using a pair of spur gears. A flywheel is provided for controlling the fluctuations in energy. The gap between the upper roller and the lower driven rollers is adjusted by two screws provided at the top. The rollers have different depths of grooves for different sections to be bent. **Fig. 4** shows the bending of angle whereas **Fig. 5** shows a flat which has been bent transversely. For an artisan type of shop, a manually-operated bending machine as shown in **Fig. 6** can be useful for such operations. Bent sections of flat by such machines have been used in the fabrication of concave of threshers as illustrated in **Fig. 7**.

Fig. 1 Mild steel cutting machine.

Fig. 2 Manually-operated sheet cutting machine.

Fig. 3 Round cutting of mild steel sheet on machine.

Fig. 4 Roller-type bending machine.

The roller-type bending machine for M.S. sheet is shown in **Fig. 8**. The principle is similar to that as shown in **Fig. 4**. Such machines can be both manually-and power-operated. These machines cut down

Fig. 5 Mild steel flat transversely bent on roller type bending machine.

Fig. 6 Manually-operated bending machine.

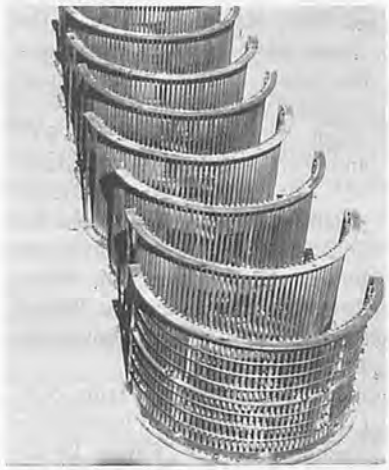

Fig. 7 Thresher concaves using transversely bent flats.

Fig. 8 Roller type mild steel sheet bending machine.

Fig. 9 Sheet bending machine.

Fig. 10 Simple bending gadget for mild steel sheet.

the time and cost of production drastically and increase the precision and productivity significantly. This fact was studied (2, 3) and found that transverse bending of flat of 25 x 6 x 750 mm size using hammer requires nearly 10 times more time as compared to bending on the roller type bending machine.

Sheet Bending Machine

The sheet bending machine is shown in **Fig. 9**. It can bend sheets at desired angles. It consists of frame, punch and die. The punch can be moved up and down through a nut and screw arrangement by using a handle. This type of machine is very useful for small scale manufacturers and costs only Rs. 2500. It is efficient and accurate as compared to the traditional method of bending and forming using hand hammers. Another simple bending gadget produced locally is shown in **Fig. 10**. It consists of an angle frame pivoted at two ends on another frame leaving a clearance between the two. A square rod is welded for leverage action. It is also efficient but not as accurate as the machine shown in **Fig. 9**. However, such a gadget costs only Rs. 300.

Drilling/Punching of Holes

Manufacturers making a limited number of machines continue to use the hammer and chisel for making holes and cutting grooves in the components of farm machines. However, large manufacturers invariably use portable and pillar type power drills, presses with dies and punches of different shapes and sizes to drill/punch/cut the holes, slots and grooves. **Fig. 11** shows an attachment with the spindle of a drilling machine for making holes in m.s. sheet. The size of the hole can be varied by adjusting the tool bit as shown. **Fig. 12** shows a power press being used to punch a hole in a component of an animal drawn disc harrow. This will not only reduce the cost of production, but will also ensure accuracy and interchangeability of parts.

Jigs and Fixtures

In order to economize on time and cost as well as to maintain the dimensional accuracy and tolerances, jigs and fixtures are used. The common practice is that the components are cut into the required sizes and are mounted on the fixture. The tacking is done at the joints by means of electric or gas welding before permanent welding. The use of the fixtures ensures dimensional accuracy, tolerance, alignment and similarity in machines manufactured in a batch.

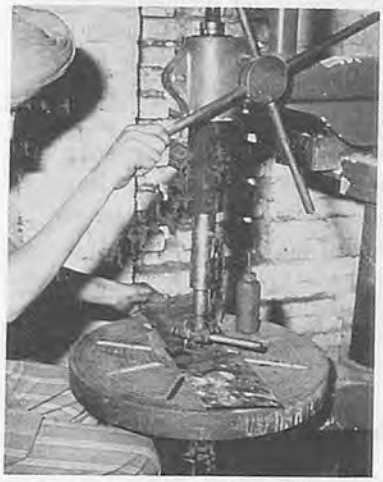

Fig. 11 Hole making drill attachment.

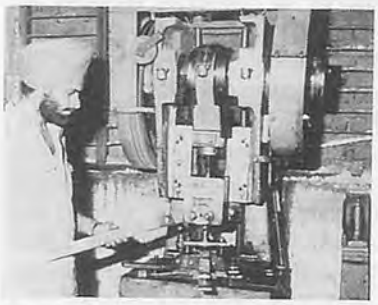

Fig. 12 Power press being used for punching holes.

Fig. 13 shows a welding fixture for the manufacture of the frames of threshers. Fig. 14 shows the concave of the thresher along with the fixture used, where transverse bent flat is being used as a side member. A set of concaves shown in Fig. 7 made with the help of fixtures can be easily interchanged.

A simple gadget for static balancing of flywheels is shown in Fig. 15. It consists of a shaft fitted in bearings and housing, fixed on a stand, such a device cots only Rs. 200. The flywheel to be balanced statically is fitted on the shaft end as shown and is rotated manually to check the balance in weight. Such

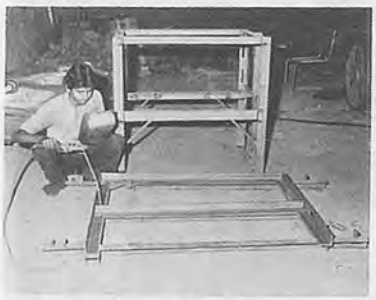

Fig. 13 Welding fixture for fabricating frames of threshers.

Fig. 14 Fabricating thresher concave using spacer.

types of gadgets are very useful for small scale manufacturers which cannot afford to buy expensive machines.

Conclusions

In most of the agricultural machinery industry, the components of various agricultural machines are made through inefficient methods devoid of modern production processes, which lead to inaccuracies in the vital dimensions and made interchangeability of fast wearing parts most difficult.

The use of low cost gadgets, jigs and fixtures, fits and tolerances and inspection gauges will help not only in improving the quality of the machines but will also lead to interchangeability of parts.

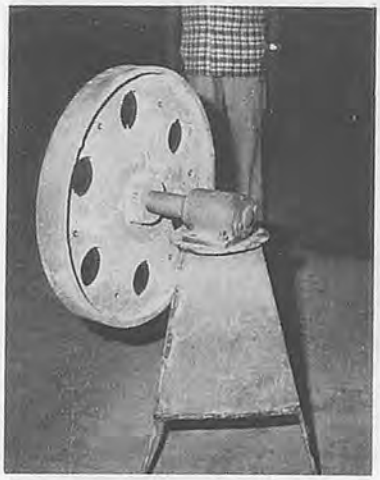

Fig. 15 Simple gadget for static balancing of flywheels of thresher.

REFERENCES

1. Verma, S.R. (1981), Agricultural Mechanization in India, Problems and Prospects, Paper presented during training-cum-discussion seminar on Effective Use of Farm Machinery, held at the Department of Farm Power and Machinery, Punjab Agricultural University, Ludhiana.
2. Singh, Joginder; Mandhar, S.C. and Verma, S.R. (1978). Study of Existing Manufacturing Techniques and Processes for Selected Farm Equipment in the Punjab, Department of Farm, Power and Machinery, Punjab Agricultural University, Ludhiana.
3. Singh, Joginder and Verma, S.R. (1984), Appropriate Production Technology for Farm Implements, Paper presented at the Seminar on Appropriate Technology for Farm Mechanization organised by N.P.C. and P.A.U., Ludhiana. ■■

Performance and Tomato Yield in Cooled Greenhouse at Al-Hassa, Saudi Arabia

by
A.M. Abdalla
Dept. of Agric. Engg.
King Faisal University
Al-Hassa, Saudi Arabia

G.M. Al-Hassan
College of Agric. & Food Sci.
King Faisal Univ.
Al-Hassa, Saudi Arabia

A.S. Al-Ghamdi
College of Agric. & Food Sci.
King Faisal Univ.
Al-Hassa, Saudi Arabia

K.A. Sallam
College of Agric. & Food Sci.
King Faisal Univ.
Al-Hassa, Saudi Arabia

Abstract

Environmental conditions, namely, the dry bulb temperature, the wet bulb temperature, air velocity and solar radiation were monitored outside and at three locations along the center line of a multispan, fan-and-pad evaporatively-cooled greenhouse: near the pad, in the middle and near the exhaust fans, during the early part of 1984 summer season in Al-Hassa. Three double-row beds of tomato plants; cultivar Laura, were selected; one bed along the extreme northern side (location 3) the second bed along the center line (location 2) and the third bed along the southern side (location 1) of the greenhouse. The double row in each location was divided into three sections, close to the exhaust fans (section A); in the middle (section B); and close to the pad (section C). Tomato yields in terms of fruit number and weight were measured and recorded for each section. The average size and percent cracking of fruits were also recorded.

Environmental measurements showed a horizontal temperature gradient of 4.3°C (from 26.3 to 22.0°C) from the wetted pad to the exhaust fans and a vertical temperature gradient of 4.2°C (from 26.3 to 22.2°C) from ground level to the height of 1.5 m. The highest tomato yield, in terms of number and weight of fruits, was obtained from the sections (C), close to the wetted pad, and location (3), along the northern side, while the lowest yield was in the section (A) close to the exhaust fans and location (1), along the southern side of the greenhouse. Fruit size and percent cracking followed the same trend.

Introduction

Self sufficiency in vegetables is one of the targets of the third five-year development plan of the Kingdom of Saudi Arabia. Through subsidies and extensive credit facilities greenhouse production of vegetables has been greatly increased during the last eight years. By the year 1403 H there were more than 78 greenhouse projects in the country with a total investment of more than 625 million saudi riyals. The total area put under greenhouse production by that year was estimated to be more than 200 ha producing more than 3000 t of vegetables annually.

Tomato is by far the most important vegetable crop produced under greenhouse conditions in the Kingdom. This is due to, among other things, its suitability to greenhouse production, high yield all year round and good quality of produce.

One of the effective methods for reducing the temperature and increasing the humidity in greenhouses under hot and arid climatic conditions, as is the case in Al-Hassa, is the fan-and-pad evaporative cooling system. Baily (1968) studied the performance of fan-and-pad cooled greenhouse and

found a considerable temperature gradient between air entry and exit. Landsberg et al (1979) using computer analysis developed a simplified technique for evaluating the efficiency of direct single stage evaporative cooling system used in greenhouses. Their technique seemed to be useful for the analysis and control of environmental conditions in greenhouses where excessive temperatures and solar radiation in the summer are the main problem. Mayson (1981), working in Abu Dhabi, found that under outside conditions of 45°C dry bulb temperature and 20% relative humidity, temperature inside greenhouse could be reduced to 30°C with an entry to exit gradient of 4.0°C.

Inspite of the adverse climatic conditions prevailing during the summer, evaporatively-cooled greenhouse production of vegetables proved to be a successful development in the Kingdom. However, the fact remains that this development has been largely based on experience gained elsewhere and no reported investigations have been done so far to study and evaluate greenhouse environment and plant performance under the local climatic conditions. To initiate research work in this area, the present project was launched with the main objective of investigating the environmental performance and tomato yield in an evaporatively-cooled greenhouse under the summer conditions of Al-Hassa.

Materials and Methods

This research was done in a multispan greenhouse at the Agricultural and Veterinary Training and Research Station of King Faisal University at Al-Hassa, the Eastern Province, the Kingdom of Saudi Arabia. The greenhouse, 64 x 32 m in area, had clear fiberglass covering and a fan-and-pad evaporative cooling system. The wetted pad, of celdeck type, was located on the western long side of the greenhouse while the exhaust fans were installed along the eastern side as shown in **Fig. 1**.

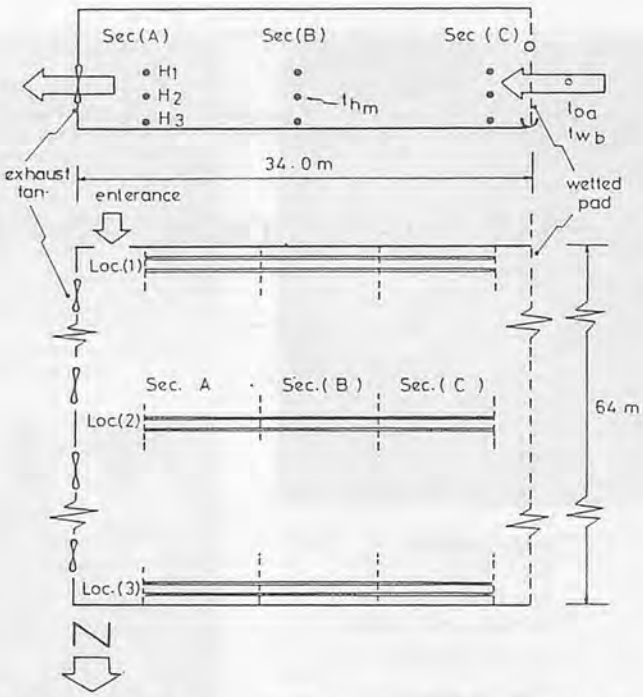

Fig. 1 Layout of greenhouse and locations of environmental measurements and tomato yield sampling.

Tomato plants, cultivar Laura, were planted in east-west oriented double row beds early in the summer of 1984. A drip irrigation, with automatic fertilizer injection system was used to irrigate the plants.

Environmental conditions were monitored by taking measurements of dry bulb temperature, wet bulb temperature, solar radiation and air speed outside and inside the greenhouse twice a week between 1200 and 1400 hours during the early part of the summer season which coincided with the harvest time of the tomato crop. Dry bulb temperature measurements inside the greenhouse were made at three locations along the centerline; near the exhaust fans (section A) in the middle (section B) and near the wetted pad (section C). At each location measurements were made at three heights, namely, 0.5 m (H_3), 1.0 m (H_2) and 1.5 m (H_1) from ground level. Wet bulb temperature, solar radiation and air velocity measurements were made at one point; 1.0 m high in the middle of the greenhouse (point t_{hm} in **Fig. 1**).

To sample the different parts of the greenhouse for tomato yield, three locations were selected, namely; one double-row bed along the northern side wall (location 3), another double-row bed along the center line (location 2) and a third double-row bed along the southern side wall (location 1) of the greenhouse. Each double-row bed was divided into three section; close to the exhaust fans (section A), in the middle (section B) and close to the wetted pad (section C), each having exactly the same number of 34 plants. Tomato yield in terms of fruit number and weight, for each section, were recorded twice a week during the experimental period. The percentage of fruit cracking and average fruit weight were also recorded for all locations and sections.

Table 1 Air Temperature at Various Locations and Positions in Greenhouse during Early Part of Summer Season, 1984 (°C)

Date	Location (1)-near fans				Location (2)-middle				Location (3)-near pad				Over-all mean
	H_1 1.5m	H_2 1.0m	H_3 0.5m	Mean	H_1	H_2	H_3	Mean	H_1	H_2	H_3	Mean	
3.4.1984	24.5	21.5	21.0	22.3	22.5	20.5	19.0	20.6	20.5	17.5	16.5	18.0	20.3
7.4.1984	26.0	27.0	25.0	26.0	26.5	25.0	23.0	24.8	19.0	19.5	18.5	19.0	23.3
10.4.1984	33.0	29.0	26.0	29.3	31.0	27.0	25.0	27.7	25.0	23.2	22.0	23.4	26.8
14.4.1984	28.0	26.0	23.5	25.8	25.5	22.3	20.5	22.8	24.3	23.5	18.5	22.6	23.6
17.4.1984	28.0	27.3	24.0	26.9	26.5	23.2	21.0	23.6	25.6	23.0	22.0	23.5	24.5
24.4.1984	27.0	23.5	20.5	23.7	22.5	21.0	18.5	20.7	20.5	20.0	18.5	19.7	21.3
28.4.1984	28.5	28.0	21.0	25.8	23.5	22.0	20.2	22.0	21.5	21.0	20.0	20.8	23.0
1.5.1984	29.0	27.2	20.5	25.6	27.5	22.5	20.5	23.5	20.5	20.0	19.0	19.8	25.0
5.5.1984	31.5	27.0	25.6	28.0	27.5	25.0	24.0	25.5	26.5	23.5	22.0	24.0	25.8
8.5.1984	27.0	25.5	24.0	25.5	26.5	25.0	24.5	25.3	24.0	23.5	22.0	23.2	24.6
19.5.1984	31.5	28.5	25.0	28.3	28.5	26.0	24.0	26.2	27.0	24.5	21.5	24.3	26.3
22.5.1984	27.0	25.2	25.0	25.7	26.0	25.5	23.0	24.8	24.5	23.0	21.0	22.8	24.4
29.5.1984	30.6	29.0	27.2	29.0	27.5	26.5	25.0	26.3	25.5	25.0	23.5	24.7	26.7
Average	28.6	26.5	23.7	26.3	26.3	24.0	22.2	24.2	23.4	22.1	20.4	22.0	

Results and Discussion

Values of the dry bulb temperature measurements obtained inside the greenhouse during the experimental period are shown in **Table 1**. The table includes the mean temperature values at each location, the overall mean temperature in the greenhouse for each day and the overall mean temperature for each of three heights for the entire experimental period. **Table 2** shows the values of all environmental parameters measured inside and outside the greenhouse.

The effective cooling efficiency (η_{ECE}) of the fan-and-pad system was calculated for each day using the following equation:

$$\eta_{ECE} = \frac{t_{oa} - t_{hm}}{t_{oa} - t_{wb}} \times 100$$

where

t_{oa} = outside air dry bulb temperature

t_{hm} = greenhouse overall mean temperature

t_{wb} = outside air wet bulb temperature

The environmental conditions prevailing inside and outside the greenhouse and the effective cooling efficiency of the fan-and-pad system are shown graphically in **Fig. 2**. Generally, the greenhouse overall mean temperature followed the daily variation in the outside wet

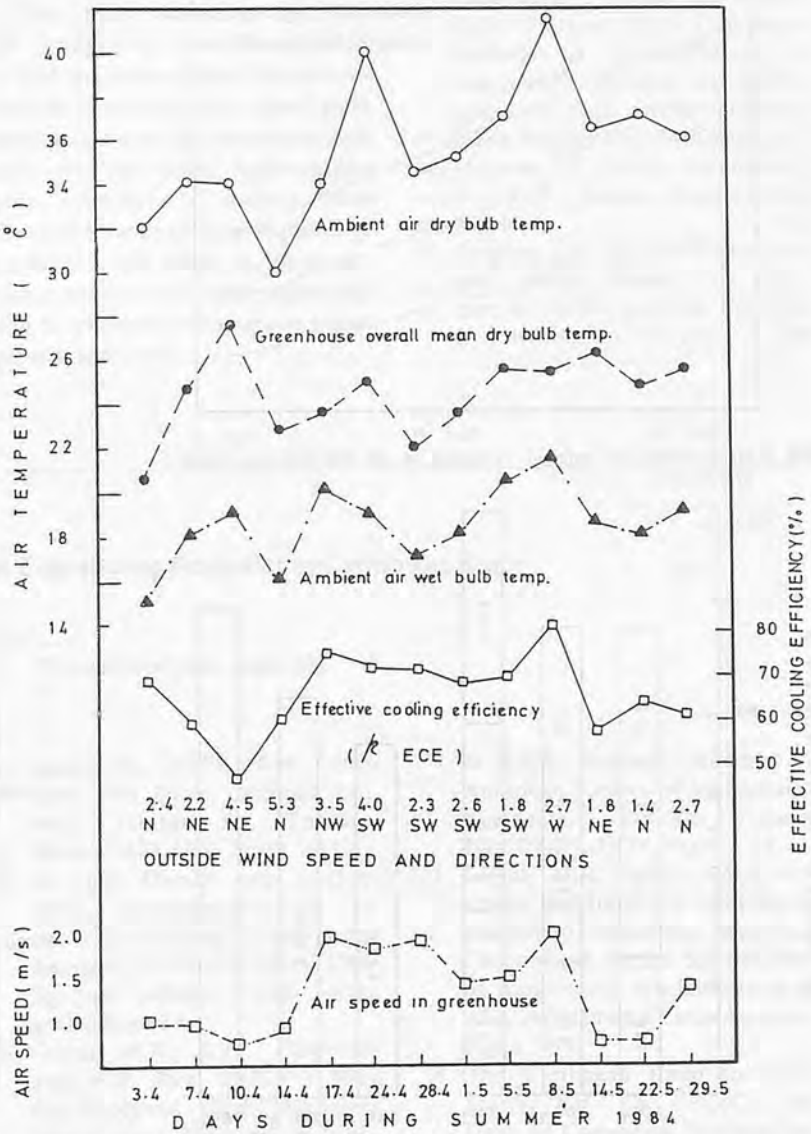

Fig. 2 Environmental conditions inside and outside greenhouse.

Table 2 Environmental Conditions inside and outside Greenhouse during Early Part of the Summer Season, 1984

Date	Outside Conditions				Inside Conditions				
	$t_{d.b.}$ °C	$t_{w.b.}$ °C	Wind vel. m/s	Solar rad. *	$t_{d.b.}$ °C	$t_{w.b.}$ °C	Air vel. m/s	Solar rad. *	Effective cooling eff. %
3.4.1984	32.0	15.0	2.4 (N)	670	20.6	18.0	1.0	422	67
7.4.1984	39.0	18.0	2.2 (NE)	650	24.8	22.3	.8	385	57.5
10.4.1984	34.0	19.0	4.5 (NE)	690	27.7	21.5	0.5	448	45.0
14.4.1984	30.0	16.0	5.3 (N)	250	22.8	19.3	.8	162	58.6
17.4.1984	34.0	20.0	3.5 (NW)	620	23.6	22.0	1.8	396	74.3
24.4.1984	40.0	19.0	4.0 (SW)	670	25.0	20.8	1.7	428	71
38.4.1984	34.5	17.0	2.3 (SW)	650	22.0	19.0	1.8	392	71
1.5.1984	35.0	18.0	2.6 (SW)	680	23.5	19.5	1.4	430	67.6
5.5.1984	37.0	20.5	1.8 (SW)	510	25.5	21.0	1.5	340	69.7
8.5.1984	41.5	21.5	2.7 (W)	720	25.3	22.5	2.0	468	81.0
19.5.1984	36.5	18.5	1.8 (NE)	650	26.2	20.3	0.5	390	57
22.5.1984	37.0	18.0	1.4 (N)	650	24.8	20.2	0.5	395	64
29.5.1984	36.0	19.0	2.7 (N)	710	25.5	22.1	113	426	61

* Solar radiation values are the mean daily in cal/cm².

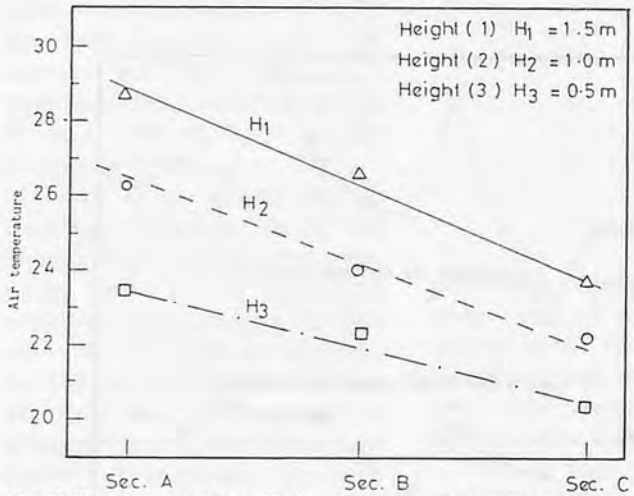

Fig. 3 Horizontal and vertical variation in air temperature inside greenhouse.

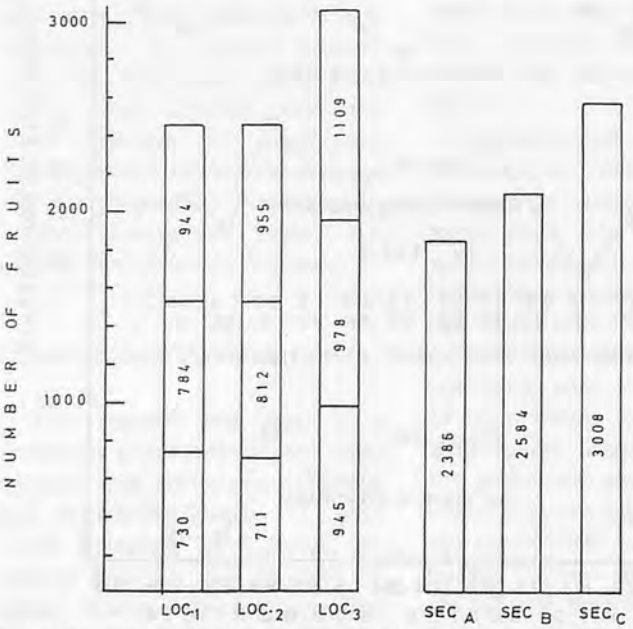

Fig. 4 Number of fruits, by location and section, harvested in greenhouse.

bulb temperature. The magnitude of cooling that could be achieved in the greenhouse varied between 16.2 and 6.3°C. This variation was caused mainly by wind direction and speed. Westerly and south-westerly winds blowing against the wetted pad generally increased the air speed and improved the effective cooling efficiency thus resulting in higher magnitude of cooling in the greenhouse; while easterly and north easterly winds had the reverse effect as can be seen from Fig. 2.

The horizontal and vertical variations in air temperature within the greenhouse are shown graphically in Fig. 3. The lowest values of temperature were recorded in section (C); close to the wetted pad while the highest values were recorded in section (A) close to the exhaust fans with an average gradient of about 4.3°C. The vertical temperature variation was also noticeable, having a maximum value of 5.1°C in section (A) and minimum value of 3.3°C in section (C) close to the wetted pad. Solar radiation measurements showed that the fiberglass covering was effective enough to reduce the transmitted radiation to nearly 60% of its total value measured outside as can be

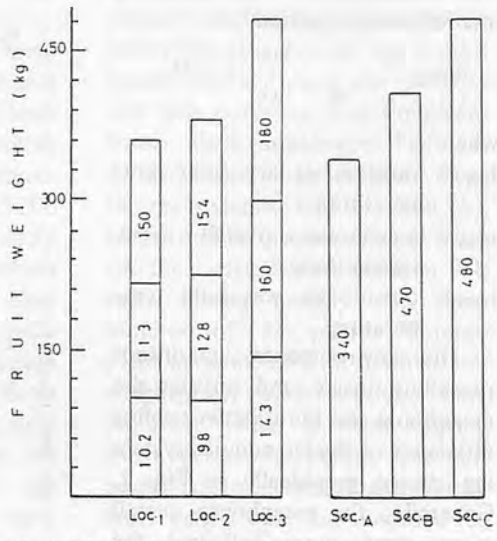

Fig. 5 Fruit weight by location and section, as harvested in greenhouse.

seen from Table 2.

Tomato yield in terms of number and weight of fruits harvested in the various locations are shown in Figs. 4 and 5, respectively. The highest tomato yield was obtained from location (3), along the northern side wall of the greenhouse and from section (C) close to the wetted pad. The consistent increase in tomato yield obtained from section (C) was expected due to the proximity of this section to the wetted pad where air temperature was the lowest and with the minimum vertical variation. The higher yield obtained from location (3), along the northern side wall was less obvious and could be due to the fact that the northern side was facing the cold northern skies to which the plants were radiating more heat and thus getting cooler than the rest of the plants in the greenhouse. As can be seen from Table 3 fruit cracking was more evident in location (3) and section (C) where higher yield and larger fruit sizes were obtained. This may be due to the physiological stress resulting from the higher yield and larger fruits in the more productive plants. Such a stress may affect the calcium absorption and metablism to which fruit cracking has been attributed in various studies. this phenomenon needs further investigation.

The main conclusion that can be drawn from this investigation is that the homogeneity of environmental conditions and plant yield expected in greenhouses is questionable, specially under high temperature conditions of summer. More detailed investigation is required to study the variability in the greenhouse environment more rigorously and to evaluate its impact on plants growth and yield.

Table 3 Percentage Cracking of Tomato Fruits, by Location and Position

Location	Position A	Position B	Position C	Mean
1	34.7	27.6	50.9	37.7
2	27.0	17.9	41.5	28.8
3	26.1	12.9	41.4	26.8
Mean	29.3	19.5	44.5	44.6

Table 4 Mean Tomato Fruit Size as Related to Location and Section in the Greenhouse

Location	Section A	Section B	Section C	Mean
1	141.1	149.9	158.9	150
2	139.2	157.7	161.3	152.7
3	148.1	163.6	162.3	158.0
Mean	142.8	157.1	160.8	

REFERENCES

1. Baily, W.A. 1968. Fan and pad cooling of greenhouses. Acta Hort. 6: 109-121.
2. Kindelan, M. 1980. Dynamic modelling of greenhouse environment. Trans. ASAE, 23 No. 5.
3. Landsberg, J.T., B. White and M.R. Thorpe 1979. Computer analysis of the efficacy of evaporative cooling of greenhouse in high energy environment. Engng. Res. 24: 29-39.
4. Mayson, J.P., 1981. Greenhouse in Arid Zones. plasticulture 52: 198.
5. Strydon, J.C. 1962. Cooling glass and plastic houses for commercial flower growing. Farming in South Africa. 21: 1-6. ■■

Agricultural Engineering Potential in Caribbean Basin

(Continued from page 58)

REFERENCES

1. Anuario de Estadísticas Agrícolas de Puerto Rico 1980-81. Departamento de Agricultura - Estado Libre Asociado de Puerto Rico, Santurce, PR, USA, Pages 97.
2. Book of the Year - Encyclopedia, 1984. Encyclopedia Británica Inc., Chicago, USA.
3. Britanica Junior Encyclopedia for Boys & Girls, 1982. Encyclopedia Britanica, Inc., Chicago, USA, Vol. 4.
4. Colin, R., 1979. The Caribbean Year Book. Caribook Ltd, 1255 Younge St., Toronto, Canada M4T 1W6. Pages 1-817.
5. El Viejo Mundo Ayer y Hoy, 1982. Departamento de Instrucción Pública Estado Libre Asociado de Puerto Rico, USA. Séptima edición para sexto grado. Page 33.
6. Goyal, M.R., T.G., Carpenter and D.M. Byg, 1979. A Need for Improved Farm Machinery Management Programs in India. Paper no. 79-1028 presented at 1979 Summer Meeting of American Society of Agricultural Engineers, Winnipeg, Canada. June 24-27, 1979. Pages 1-15.
7. Goyal, M.R. 1983. AMA Abstracts and Index 1971-80. Farm Machinery Industrial Research Corporation, Japan. Special Issue of Agricultural Mechanization in Asia, African and Latin America. Pages 1-85.
8. The Caribbean Basin Initiative Starter Kit. The CBBIC - US Dept. of Commerce, Washington, DC 20230, USA. ■■

Nomographs for Sensible Heat Carried out of Furnace by Products of Combustion

by
K. Kumar
Post Harvest Technology Centre
Indian Institute of Technology
Kharagpur, India

S. Bal
Post Harvest Technology Centre
Indian Institute of Technology
Kharagpur, India

Abstract

The computation of the amount of heat retained in the furnace and the amount of heat taken away by products of combustion is very tedious and cumbersome. The nomographs for jute stick and paddy straw have been prepared for this purpose in order to avoid long calculations.

Introduction

The heat energy that the products of combustion take out of the combustion-type furnaces is either in potential form in the shape of unburnt fuel or in kinetic form in the shape of sensible heat. To the latter may be added the latent heat of water vapour. The calculation of these heat losses is tedious.

It is, however, feasible to put the results of these calculations into graphical forms simultaneously and to use the charts afterwards with but little trouble. To this end, the heat content or thermal capacity of the flue gases is plotted against their temperature as indicated in Figs. 1 and 2. The curve A, furnishes the sensible heat content (above 15.5°C or 60°F) in the products of perfect combustion (without excess air) of unit quantity of fuel. It does not include the latent heat of the water vapour. For this reason, the heating value that should be used in calculation with the curve is the lower heating value. If the higher heating value is used instead, then the latent heat of the water vapour (which is the difference between the higher and the lower heating value) should be added to the heat content as read from the curve A.

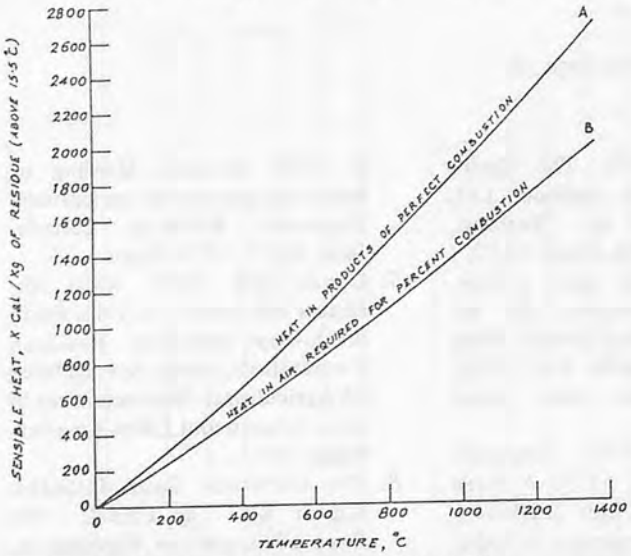

Fig. 1 Heat in products of combustion of jute stick.

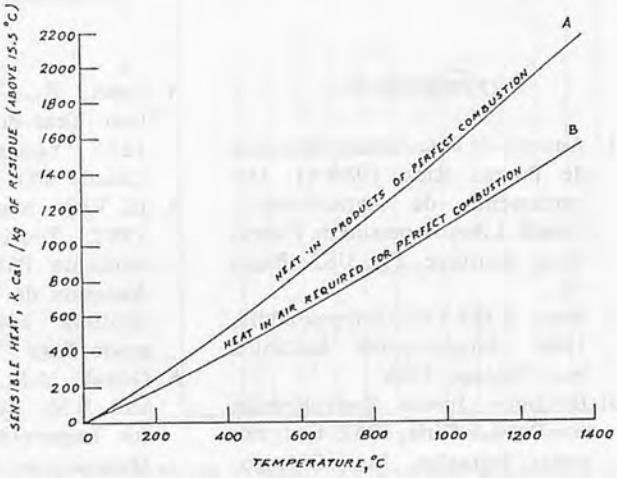

Fig. 2 Heat in products of combustion of paddy straw.

The curve B, taken by itself, has no direct physical meaning, but it is very convenient for the purpose of calculation. It represents the heat in that quantity of air which is required to burn an unit quantity of fuel, plotted as a function of the temperature of that air. If combustion has been carried on with excess air or if the air has filtered into the furnace after combustion, the flue gases contain excess air. If the amount of that excess air, P, is present, the heat in the flue gas per unit quantity of fuel, and for a given temperature, is found by taking the ordinate of the A curve for the temperature in question and adding to it P% of the ordinate of the B curve.

Methodology

The method of construction of the nomograph of agricultural residues, for heat taken away by products of combustion is as follows:

The curve A of the nomograph furnishes the sensible heat content (above 60°F or 15.5°C) in the products of perfect combustion (without excess air) of unit quantity of fuel. One point of the curve for jute stick, given in **Fig. 1**, will now be calculated as an example in F.P.S. system and then converted to M.K.S. Let the temperature of products of combustion be 593.3°C(1100°F). By the method of calculating chemical reactions it is found that, for perfect combustion of jute stick, 5.48 lb of air per lb of stick is required. The products of combustion of 1 lb of stick are

CO_2 = 1.59 lb
H_2O = 0.65 lb
N_2 = 4.23 lb

For the range from zero to 1100°F(593.3°C), the mean specific heats at constant pressure were:

From **Appendix**
CO_2 = 0.2508
H_2O = 0.4752
N_2 = 0.2547

With these values, heat in products of combustion above 0°F equals

$(1.59 \times 0.2508 + 0.65 \times 0.4752 + 4.23 \times 0.2547) \times 1100$
$= (0.4 + 0.31 + 1.08) \times 1100$
= 1969.00 Btu/lb of stick

$$= \frac{1969 \times 1000}{3.968 \times 454} \text{ kcal/kg}$$

= 1093.00 kcal/kg of jute stick

From zero to 60°F (15.5°C), the mean specific heat are as follows:

CO_2 = 0.1964, N_2 = 0.2482, H_2O = 0.4443 **(Appendix)**

Heat in 1 lb of fuel, between zero to 60°F (15.5°C) equals

$(1.59 \times 0.1964 + 0.65 \times 0.4443 + 4.23 \times 0.2482) \times 60$
$= (0.31 + 0.29 + 1.05) \times 60$
= 99.00 Btu/lb of jute stick

$$= \frac{99 \times 1000}{3.968 \times 454} \text{ kcal/kg}$$

= 54.95 kcal/kg of jute stick.

Therefore, the heat in uncondensed products of perfect combustion from 1.00 kg of fuel between 15.5°C (60°F) and 593.3°C (1100°F)

= 1093.00 – 54.95
= 1038.05 kcal/kg of jute stick.

It may, however, be noted that this does not include the latent heat of water vapour.

For calculation of the 593.3°C (1100°F) point on the B curve, it is necessary to find the amount of heat required to raise the temperature of 5.48 lb of air (per lb of jute stick fired) from 60°F (15.5°C) to 1100°F (593.3°C). The mean specific heat of air at constant pressure between zero and 1100°F is 0.2489 and between zero and 60°F is 0.2395 **(Appendix)**.

Heat required to raise the temperature of 5.48 lb of air from 60°F to 1100°F is

$5.48 \times (0.2489 \times 1100 - 0.2395 \times 60)$
= 1421.62 Btu/lb of jute stick

$$= \frac{1421.62 \times 1000}{3.968 \times 454} \text{ kcal/kg}$$

= 789.14 kcal/kg of jute stick.

The sensible heat in products of combustion and in air required for perfect combustion were thus calculated from 15.5°C (60°F) to 1371.1°C (2500°F) for jute stick

Table 1 Sensible Heat in Products of Combustion of Agricultural Residues above 15.5°C (60°F)

Temperature, °F	Temperature, °C	Sensible heat of agricultural residues, kcal/kg	
		Jute stick	Paddy straw
60	15.5	0.00	0.00
300	148.9	223.83	182.10
500	160.0	416.80	338.92
700	371.1	616.06	501.06
900	482.2	822.00	668.73
1100	593.3	1033.92	840.95
1300	704.4	1253.13	1019.74
1500	815.6	1478.80	1203.14
1700	926.7	1710.91	1391.77
1900	1037.8	1948.65	1586.17
2100	1148.9	2191.80	1782.83
2300	1260.0	2440.18	1985.35
2500	1371.1	2691.92	2190.01

Table 2 Sensible Heat in Air Required for Perfect Combustion of Agricultural Residues above 15.5°C (60°F)

Temperature, °F	Temperature, °C	Sensible heat of agricultural residues, k cal/kg	
		Jute stick	Paddy straw
60	15.5	0.00	0.00
300	148.9	175.67	137.53
500	260.0	324.06	253.69
700	371.1	475.00	371.85
900	482.2	630.05	493.23
1100	593.3	789.15	617.78
1300	704.4	952.44	745.61
1500	815.6	1119.84	876.66
1700	926.7	1291.52	1011.07
1900	1037.8	1467.11	1148.52
2100	1148.9	1645.94	1288.52
2300	1260.0	1827.15	1430.38
2500	1371.1	2009.61	1573.21
Air required per kg of agricultural residues		5.48 kg	4.29 kg

and paddy straw. These values are presented in **Tables 1 and 2**. The nomographs for the sensible heat carried out of furnace by products of combustion are presented in **Figs. 1 and 2**.

Use of the Nomograph

Let natural gas (air) enter a furnace at atmospheric temperature, let the combustion take place with 30% excess air; and let the products of combustion leave the furnace with a temperature of 1000°C. The amount of heat of combustion retained in the furnace and that which is taken away by the products of combustion will be calculated thus:

From curve A (**Fig. 1**) the heat in the products of perfect combustion is found to be 1875 kcal/kg at 1000°C. The heat in the air is found to be 1410 kcal/kg at 1000°C from curve B, which means that 30% excess air contains 423 kcal/kg. The heat in flue gases = 1875 + 423 = 2298 kcal/kg of jute stick. The higher heat value (as determined by bomb calorimeter) of jute stick is 4075.665 kcal/kg; its lower heat value is 3746.76 kcal/kg. Hence 2298 kcal are carried out as sensible heat in the products of combustion, and 4075.665 − 3746.76 = 328.90 kcal as latent heat in the water vapour produced. (2298.00 + 328.90)/4075.665 = 0.6445 or 64.50% of the total heat is carried off by the products of combustion and the rest, namely; 35.5% is given up into the furnace. In the case of paddy straw, under similar temperature and excess air conditions, the values are 62% and 38%, respectively.

Appendix Specific Heat of Air and Gases at Different Temperature*

Temperature °F	Temperature °C	Absolute mean temp. °F	Specific heat, Cp			
			Air	N_2	CO_2	H_2O
60	15.5	490	0.2395	0.2482	0.1964	0.4443
300	184.9	610	0.2404	0.2485	0.2100	0.4477
500	260.0	710	0.2418	0.2492	0.2220	0.4531
700	371.1	810	0.2436	0.2505	0.2327	0.4596
900	482.2	910	0.2461	0.2526	0.2422	0.4671
1100	593.3	1010	0.2489	0.2547	0.2508	0.4752
1300	704.4	1110	0.2519	0.2575	0.2585	0.4837
1500	815.6	1210	0.2550	0.2605	0.2654	0.4924
1700	926.7	1310	0.2582	0.2637	0.2717	0.5013
1900	1037.8	1410	0.2614	0.2670	0.2773	0.5103
2100	1148.9	1510	0.2645	0.2701	0.2825	0.5196
2300	1260.0	1610	0.2647	0.2732	0.2872	0.5290
2500	1371.1	1710	0.2700	0.2762	0.2913	0.5385

* White, A.H., Technical Gas and Fuel Analysis. Mc Graw Hill Co., Inc., New York, 1955.

REFERENCES

1. Maheshwari, R.C. (Dec., 1975). Utilization of Rice Husk as Fuel, Ph. D. Thesis, Agricultural Engineering Department, I.I.T., Kharagpur.
2. Trinks, W. (1956). Industrial Furnaces. Fourth Eition, Vol. I. John Willey and Sons, Inc., Chapman and Hall Ltd., London.
3. White, A.H. (1955). Technical Gas and Fuel Analysis. McGraw Hill Co., Inc., New York.
4. Sarkar, Samir (1974). Fuels and Combustion. Orient Longman, Bombay. ■■

Factors Influencing Effectiveness of Radio-Frequency Dielectric Heating on Rice Bran

by
V.V. Sreenarayanan
Assoc. Prof.
Dept. of Agric. Processing
College of Agric. Engg.
Tamil Nadu Agric. Univ.
Coimbatore 641003, India

P.K. Chattopadhyay
Asst. Prof.
Post Harvest Technology Centre
Indian Institute of Technology
Kharagpur 721302, India

Abstract

Rice bran was exposed to radio-frequency (RF) dielectric heating at an average field intensity of 0.5 kV/cm. In order to ascertain the effects of the factors, namely; moisture content, exposure period and bulk density of the samples, experiments were performed according to response surface methodology. The amount of heat energy absorbed by the sample from the RF electric field was found to have positive non-linear correlation with the factors studied. Suitable multiple regression models were developed for predicting the temperature rise and moisture loss of the sample.

Introduction

Rice bran is the most valuable by-product of rice milling industry as it contains about 15 to 25% oil. Moreover, its high content of protein, sugars and other carbohydrates make it a good feed as well as food supplement. The main problem in utilizing the bran for producing edible grade oil is its poor keeping quality, where oil in the bran is hydrolyzed very fast into free fatty acid (FFA) due to the action of various enzymes. Inactivation of these destructive enzymes known as stabilization can successfully eliminate this problem. It has been reported that by heating bran to about 110°C, stabilization can be achieved (Viraktamath and Desikachar, 1971; Barber, 1976). However, all the conventional methods of stabilization using heat treatment, cannot be utilized commercially because of the slow and non-uniform heating rate since rice bran is a poor conductor of heat. Sreenarayanan (1983) reported that radio-frequency (RF) dielectric heating can be successfully utilized for the inactivation of the enzymes responsible for the deterioration of the oil. Therefore, the aim of the present investigation was to study the effect of the various factors, namely; initial moisture content, exposure period and bulk density on the heating rate of rice bran exposed to RF electric field.

The possibilities of dielectric heating lie in the fact that it represents a method of introducing energy into an insulating material in a manner which is different from the conventional method of heating. A sample placed in a RF field is subjected to an electrical stress which alternates several million times a second. The rapid alteration of stress applied to the molecules represents an energy input to the material which appears as heat. Thus RF dielectric heating has the unique advantage of generating heat internally in each particle of a mass of material like rice bran having very low thermal conductivity.

It has been reported that the dielectric heating can be effectively employed for drying grain Knipper, 1959) and seed treatment for the reduction of hard seeds (Nelson and Walker, 1961; Nelson and Wolf, 1964; Nelson et al., 1970).

Stetson et al. (1969) reported that chopped alfalfa could be dried rapidly by dielectric heating and the carotene retention of the dried alfalfa was doubled by exposing it for 1 min in the RF field.

Wright and Porterfield (1971) employed dielectric heating for drying peanuts and concluded that generation of internal energy by a RF field had practical potential for increasing the efficiency of forced convective drying systems for peanuts.

Rapid improvements in nutritional quality of soybeans by dielectric heating have been report-

ed by Borchers et al., (1972) and Pour-El et al., (1981).

Other areas in which research on RF heating have been conducted include dehydration of vegetables, tobacco curing, defrosting of frozen foods etc. and some of these applications have been adopted commercially (Nelson, 1962).

Materials and Methods

Experimental Set-up

The experiments were conducted with a commercially available 1.5 kW capacity dielectric heater operating at 13.56 MHz. Two suitable electrode plates were provided to the heater. The bottom electrode was made from 20-gauge aluminium sheet, while the top electrode was made from 20-gauge aluminium wire mesh, which facilitated the escape of moisture from the sample through the top electrode while heating.

A sample holder of 14.4 x 14.4 cm size and 1.5 cm deep was fabricated out of 3 mm-thick teflon sheet. Teflon was used since it has a very low dielectric loss factor of 0.00008 (Mark, 1976) and hence it absorbs practically no energy from radio frequency electric field.

For the measurement of the RF high voltage across the electrodes, a RF voltage divider probe was designed and fabricated. The probe had both capacitive and resistive voltage division. The output terminals of the probe were connected to a VTVM for the measurement of the voltage. The probe along with the VTVM was calibrated by applying a known low input voltage at 13.56 MHz from a bridge oscillator. The voltage divider probe used in the present study had a voltage reduction ratio of 91:1.

All the experiments were performed with the bran milled from Japonica x Indica paddy variety. Rice bran was obtained by polishing the brown rice in an abrasive type polisher. The degree of polish given was about 5%. The average particle size of the bran was 0.0269 cm. Bran samples of desired higher moisture contents were obtained by adding calculated amount of distilled water, sealed in polyethylene bags and stored at about 5°C inside a refrigerator for at least 10 days with frequent agitation to ensure uniform moisture distribution. Lower moisture levels were obtained by drying the samples in an oven at 55 to 60°C for several hours depending upon the final moisture content required.

Experimental Procedure

The bran samples of desired moisture content was filled in the sample holder to the required bulk density and kept on the bottom electrode of the dielectric heater, leaving an air gap of 0.5 cm between the surface of the sample and the top electrode. The sample was exposed to dielectric heating for the required duration of time, by suitably adjusting the process timer. The electrode voltage was noted from the VTVM and the average field intensity was calculated using the following Eqn. (Pour-El et al., 1981):

$$E = V/\ [d_1 + d_2\ (\epsilon_1/\epsilon_2) + d_3\ (\epsilon_1/\epsilon_3)]\ \text{kV/cm} \quad \ldots\ldots\ldots (1)$$

Where, E = average field intensity, kV/cm

V = RF electrode voltage, kV

d_1 = depth of bran sample in the sample holder, cm

d_2 = thickness of sample holder measured perpendicular to the plane of the electrodes, cm

d_3 = depth of air space between the top level of the sample and the upper electrode, cm

ϵ_1, ϵ_2 and ϵ_3 = dielectric constants of rice bran, teflon and air respectively.

In the present investigation, the average field intensity was found to be 0.5 kV/cm.

At the end of heating, the sample was removed immediately and its temperature was measured by inserting the sensing probe of a temperature indicator as no metallic object could be introduced into the sample while heating was on. Since there was some time lag between the end of heating and the temperature measurement, it was necessary to utilize extrapolation technique (Nelson and Whitney, 1960) to determine the actual temperature attained by the sample at the end of heat treatment. The elapsed time between

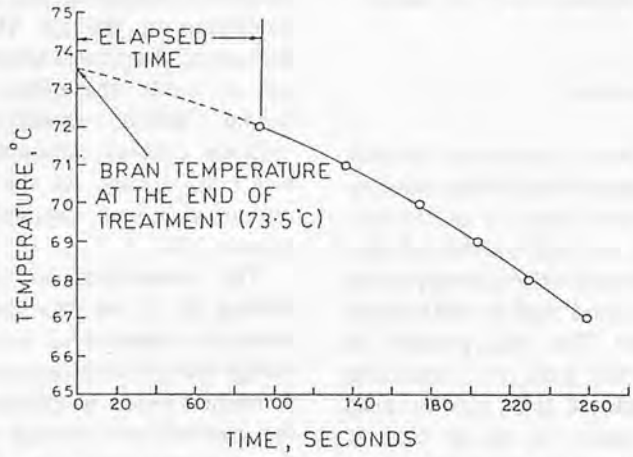

Fig. 1 Typical temperature-time curve showing elapsed time, bran temperature and method of extrapolation.

Table 1 Experimental Conditions and Codings of the Factors (Cochran and Cox, 1957)

Treatment No.	Natural values of the factors			Coded values of the factors		
	Moisture content per cent (w.b.)	Exposure time, min.	Bulk density kg/m³	X_1	X_2	X_3
1.	7	2	330	−1	−1	−1
2.	11	2	330	+1	−1	−1
3.	7	5	330	−1	+1	−1
4.	11	5	330	+1	+1	−1
5.	7	2	430	−1	−1	+1
6.	11	2	430	+1	−1	+1
7.	7	5	430	−1	+1	+1
8.	11	5	430	+1	+1	+1
9.	5.64	3.50	380	−1.682	0	0
10.	12.36	3.50	380	+1.682	0	0
11.	9	0.98	380	0	−1.682	0
12.	9	6.02	380	0	+1.682	0
13.	9	3.50	296	0	0	−1.682
14.	9	3.50	464	0	0	+1.682
15.	9	3.50	380	0	0	0
16.	9	3.50	380	0	0	0
17.	9	3.50	380	0	0	0
18.	9	3.50	380	0	0	0
19.	9	3.50	380	0	0	0
20.	9	3.50	380	0	0	0

Where, X_1 = [moisture content (M) per cent (W.B.) −9]/2
X_2 = [exposure time (θ) min − 3.5]/1.5
and X_3 = [bulk density (ρ), kg/m³ − 380]/50.

the end of the treatment and the first temperature measurement was noted with a stop watch. Then for each degree drop of the sample's temperature, the corresponding time was noted. A temperature-time curve was drawn and the actual temperature attained by the sample at the end of the treatment was obtained by extrapolation as shown in **Fig. 1**.

The mositure content of the sample at the end of the treatment was also determined and the percent poisture loss was calculated.

Design of Experiments

In order to study the effects of various factors, namely; the moisture content, exposure time and bulk density of rice bran on the heating rate and moisture loss, the experiments were designed according to Response Surface Methodology (Cochran and Cox, 1957; Wu, 1964). The experiments were performed for the various treatment combinations of the factors given in **Table 1** in a random order and suitable regression models were developed.

Results and Discussion

The regression analysis of the experimental results obtained from the various treatment combinations of the factors as detailed in **Table 1** yielded the following second order multiple regression models for the temperature rise and moisture loss:

$$T = 83.562 - 6.148\,M + 0.54\,\vartheta - 0.279\rho + 1.060\,M^2 + 5.64 \times 10^{-4}\rho^2 - 0.521\,M.\vartheta - 0.018\,M.\rho + 0.038\,\vartheta\rho \quad \ldots\ldots\ (2)$$

$$M^1 = -7.378 + 0.086\,M + 3.169\,\vartheta + 0.072\,M^2 - 0.270\,\vartheta^2 \quad \ldots\ldots\ (3)$$

Where, T = temperature rise, °C
M = initial moisture content of sample, % (w.b.)
ϑ = exposure time, min
ρ = bulk density, kg/m³
and M^1 = moistures loss, % (d.b.)

All the coefficient for the simple, quadratic and interaction effects of the factors appearing in a second order multiple regression model were subjected to t-test for finding out the significance at 5% level and the coefficients which were found to be significant alone were included in equations (2) and (3). It may also be noted that these models will hold good for predicting the responses only within the experimental ranges of the levels of the factors shown in **Table 1** at a field intensity of 0.5 kV/cm.

The contour plots of the temperature rise as a function of initial moisture content and exposure time at four levels of bulk densities, namely; 330, 360, 400 and 430 kg/m³, computed from equation (2), are presented in **Fig. 2**. These contour plots help to determine the temperature rise of bran for any given combinations of initial moisture content and exposure time for a particular bulk density. It may be observed from the figure that the higher the initial moisture content, the lower is the exposure period required for getting the same temperature rise for the bran with the particular bulk density. Also, at higher bulk densities, temperature rise was greater for the same conditions of other two variables.

Fig. 3 gives the contour plot of the moisture loss as a function of initial moisture content and exposure time computed from equation (3). For the same amount of moisture removal, the sample containing higher initial moisture content needed to be exposed for a shorter period as could be seen from the contour plot.

It has been reported that the dielectric constant and dielectric loss factor of rice bran increase with its moisture content and bulk density (Sreenarayanan, 1983). The amount of energy absorbed by a material from RF electric field is positively correlated with the material's dielectric constant and dielectric loss factor (Nelson, 1967). Therefore, as the moisture content and bulk density of the bran were increased, the energy absorbed by the sample from RF electric field also increased correspondingly resulting in a higher temperature rise and moisture loss.

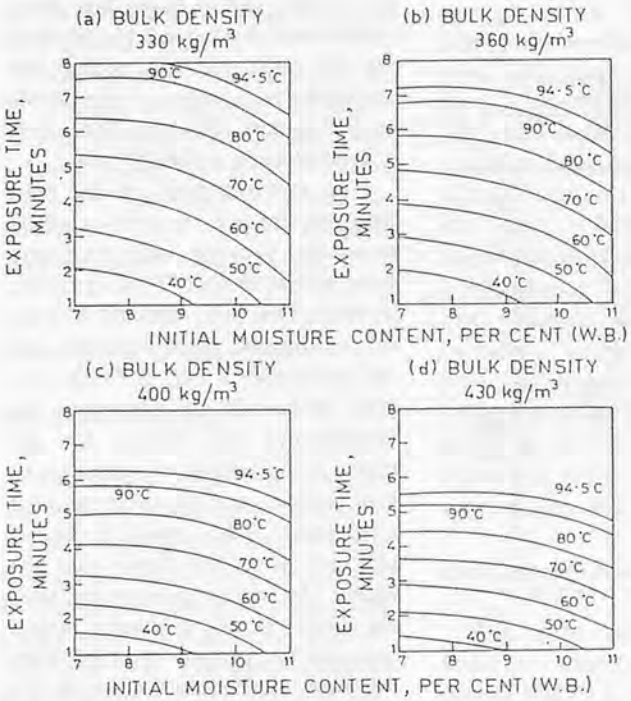

Fig. 2 Contour plots of the temperature rise as a function of exposure time and initial moisture content at indicated bulk densities.

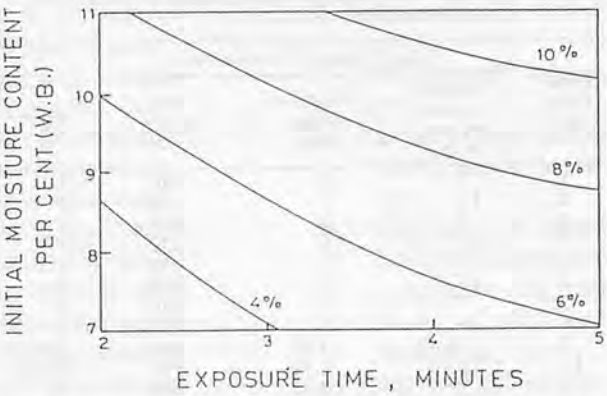

Fig. 3 Contour plots of the moisture removal, (initial m.c.– final m.c.), percent(d.b.) as a function of exposure time and initial moisture content.

Conclusions

1. The energy absorption or the temperature rise of the bran under RF electric field is positively correlated with the sample's moisture content, bulk density and period of exposure.
2. RF dielectric heating is very effective for heating rapidly and uniformly fluffy insulating materials like rice bran required for stabilization and other processing operations.

REFERENCES

Barber, S. (1976). Stabilization of rice bran. UNIDO Ad-Hoc Expert Group Meeting, Vienna, Austria, ID/WG. 240/7.

Borchers, R., Manage, L.D., Nelson, S.O. and Stetson, L.E. (1972). Rapid improvement in nutritional quality of soybeans by dielectric heating. J. Food Sci. Vol. 37: 333-334.

Cochran, W.G. and Cox, G.M. (1957). Experimental Designs. Asia Publishing House, 2nd Edition, pp. 335-375.

Knipper, N.V. (1959). Use of high frequency currents for grain drying. J. Agric. Engng. Res. Vol. 4(4): 349-360.

Mark, H.F. (1976). Encyclopedia of polymer Science and Technology, Interscience Publishers, Supplement Vol. 1, p. 264.

Nelson, S.O. (1962). Radiation processing in agriculture. Trans. ASAE. Vol. 5(1): 20-25, 30.

Nelson, S.O. (1967). Pest Control – Biological, Physical and Selected Chemical Methods. Academic Press, pp. 89-145.

Nelson, S.O., Nutile, G.E. and Stetson, L.E. (1970). Effects of radio-frequency electrical treatment on germination of vegetable seeds. J. Amer. Soc. Hort. Sci. Vo. 95(3): 359-366.

Nelson, S.O. and Walker, E.R. (1961). Effects of radio-frequency electrical seed treatment. Agricultural Engineering. Vol. 42(12): 688-691.

Nelson, S.O. and Whitney, W.K. (1960). Radio-frequency electric fields for stored grain insect control, Trans. ASAE. Vol. 3(2): 133-137, 144.

Nelson, S.O. and Wolf, W.W. (1964). Reducing hard seed in alfalfa by radio-frequency electrical seed treatment, Trans. ASAE. Vol. 7(2): 116-119, 122.

Pour-El, A., Nelson, S.O., Peck, E.E., Tjhio, B. and Stetson, L.E. (1981). Biolotical properties of VHF – and microwave – heated soybeans. J. Food Sci. Vol. 46(3): 880-885, 895.

Sreenarayanan, V.V. (1983). Investigation of some physical, thermal and dielectric properties of rice bran and its stabilization by dielectric heating. Ph.D. thesis submitted to Indian Institute of Technology, Kharagpur, India.

Stetson, L.E., Ogden, R.L. and Nelson, S.O. (1969). Effects of radio-frequency electric fields on drying and carotene retention of chopped alfalfa. Trans. ASAE. Vol. 12(3): 407-410.

Viraktamath, C.S. and Desikachar, H.S.R. (1971). Inactivation of lipase in rice bran in Indian rice mills. J. Fd. Sci. Technol. Vol. 8 (2): 70-74.

Wright, M.E. and Porterfield, J.G. (1971). Heating and drying peanuts with radio-frequency energy. Trans. ASAE. Vol. 14(4): 629-633, 637.

Wu, S.M. (1964). Tool life testing by response surface methodology, Part I. Transactions of the ASME, Journal of Engineering for Industry. Vol. 86: 105-111.

INQUIRY and REQUEST to AMA

Please let us know your need. We shall promptly reply them. Inquire on any catalog listed in the advertisement in this issue. We shall try our best to serve you. We welcome articles of interest to agricultural mechanization.

Fill in the reverse side of this card and send us by sealed letter.

FARM MACHINERY INDUSTRIAL RESEARCH CORP.

7–2 Kanda Nishikicho Chiyoda–ku Tokyo–Japan 101

ADVERTISED PRODUCTS INQUIRY

Product	Advertiser	Vol., No., Page

EDITORIAL REQUEST TO AMA

Your Name :

Address :

Occupation :

SUBSCRIPTION/ORDER FORM

AGRICULTURAL MECHANIZATION IN ASIA, AFRICA AND LATIN AMERICA (AMA)

Issued Quarterly

Subscription Rate (includes surface mail postage)

Annual (4 issues) ----------¥.6,000
Single copy ----------¥.1,700

Back Issues (1971−75, ¥.2,000 per copy)
(1976−77, ¥.1,200 per copy)
(1978−80, ¥.1,500 per copy)

★Spring, 1971	□Vol.7 No.2, Spring, 1976	□Vol.9 No.4, Autumn, 1978
□Vol.2 Autumn, 1971	□Vol.7 No.3, Summer, 1976	□Vol.10 No.1, Winter, 1979
□Vol.3 No.1, 1972	□Vol.7 No.4, Autumn, 1976	□Vol.10 No.2, Spring, 1979
□Vol.3 No.2, Summer, 1972	□Vol.8 No.1, Winter, 1977	□Vol.10 No.3, Summer, 1979
□Vol.4 No.1, Spring, 1973	□Vol.8 No.2, Spring, 1977	□Vol.10 No.4, Autumn, 1979
□Vol.4 No.2, Autumn, 1973	□Vol.8 No.3, Summer, 1977	★Vol.11 No.1, Winter, 1980
□Vol.5 No.1, Summer, 1974	□Vol.8 No.4, Autumn, 1977	□Vol.11 No.2, Spring, 1980
□Vol.6 No.1, Spring, 1975	□Vol.9 No.1, Winter, 1978	□Vol.11 No.3, Summer, 1980
□Vol.6 No.2, Autumn, 1975	□Vol.9 No.2, Spring, 1978	□Vol.11 No.4, Autumn, 1980
□Vol.7 No.1, Winter, 1976	★Vol.9 No.3, Summer, 1978	★: Indicates issues out of stock.

□ Abstract and Index, 1971-80 (Special Issue, 1983)

(Check issues and number of copies you wish to order)

Back Issues from 1981, ¥.1,700 per copy

Abstract and Index, Special Issue, 1983, ¥2,000 per copy.

Vol._____ No._____, _____ 19_____, _____ copy/copies

(check one)

□ Please invoice me/us

□ I/We enclose remittance for ¥_____

****

Name: _____

Firm: _____

Position: _____

Address: _____

(block letters)

FARM MACHINERY INDUSTRIAL RESEARCH CORP.

7, 2-chome, Kanda Nishikicho, Chiyoda-ku,
Tokyo 101 Japan
Tel. (03)−291−3671~4, 5718

STAMP

FARM MACHINERY INDUSTRIAL RESEARCH CORP.

7, 2-CHOME, KANDA NISHIKICHO, CHIYODA-KU
TOKYO, 101 JAPAN

1st FOLD HERE

2nd FOLD HERE

Simple and Low Cost On-Farm Paddy Dryer (Part II)

by
Kocky Uyeda
Former Expert on Post-Harvest Technology
ESCAP/UNIDO Division of Industry
Human Settlements and Technology
Mailing Address: Tennohdai 3-7-1-401, Abiko-shi 270-11, Japan

Preface

The last issue of this periodical, the summer issue of AMA VOL. 17, No. 3, 1986 did not allow me to cite figures to show **findings** and **summary** of the demonstration experiements because of room shortage.

This paper makes a complete set of a report on the experiments in combination with the preceding paper.

Findings

Measurements were taken of the following parameters: (1) Meteorological ones, (2) Physical ones and (3) Apparatus ones.

The above measurements were replicated seven times, and gained numerous findings. However, in this paper the findings from only Experiment II are indicated in **Tables 4-6** and, **Fig. 10**.

Table 4 shows relation between meteorologic conditions and operation of the fan/engine, and **Table 5** indicates changes of paddy moisture content (%) during the process of Experiment II. Both tables are illustrated into **Fig. 10**.

Table 6 gives velocity of exhaust flow and calculates volume of air flow forced through a mass of paddy in Experiment II. Regarding the air flow volume, its ratio to a mass of paddy dried up by it counts among all factors in drying paddy, so how to find out weight of paddy used in the experiment and removal of paddy moisture (kg) by drying is briefly explained in a foot note of the table.

Table 4 Relation between Meteorologic Conditions and Operation of Fan/Engine in Experiment II

Date	Hour	Weather	Temperature (°C)	Relative humidity (%)	Equilibrium moisture content (%)	Operation of Fan/Engine	
						Gasoline fueled (*l*)	RPM
	pm						
11/	2:30	cloudy	32.0	59	11.0	2.0 Fuel	992
June	3:12	cloudy				Start Opera.	
	4:30	cloudy	32.0	59	11.0		
	4:52	cloudy				Stop Opera.	
	am						
12/	8:30	cloudy	29.5	73	13.1		
June	8:34	cloudy				Start Opera.	992
	9:30	fair	30.5	67	12.2		
	9:35	fair				Opera. Stops due to No Gas. 3.0 Refuel	
	9:40	fair				Start Opera.	987
	10:30	fair	31.5	62	11.5		
	11:30	cloudy	31.5	62	11.5		
	11:42	rainy				Stop Opera. due to Rain Fall	
	11:52	rainy	28.0	82	14.6		
	pm						
	0:50	cloudy	30.0	70	12.7		
	1:00	cloudy					
	1:45	fair	33.0	63	11.5		
	2:45	cloudy	33.0	66	11.9		
	2:50	cloudy				Opera. Stops due to No Gas. 1.5 Refuel	
	2:57	cloudy				Start Opera.	1,004
	3:45	fair	33.0	66	11.9		
	4:45	cloudy	32.0	70	12.5		
	4:51	cloudy				Opera. Stops due to No Gas	
	am						
13/	8:30	cloudy	29.0	73	13.1		
June						1.0 Refuel	
	8:51	cloudy				Start Opera.	990
	9:30	cloudy	30.5	67	12.2		
	10:04	cloudy				Opera. Stops due to No Gas.; End.	
	11:20	cloudy	31.5	62	11.4		

Total operation hours: 9:36 = 9.6 h
Gasoline Consumed: 7.5 *l*

Table 5 Changes of Paddy Moisture Content (%) in Experiment II

Date	Hour	Location of paddy bed		Location in paddy layer depth			Average (%)	Average coverted (%)
		Slope	Dis. fr. Fan	Top	Midst	Bottom		
11/Jun.	Before loading	Observations of 28 samples, picked up from every bag					17.1	16.5
	pm			%	%	%		
	4:40	Left	Near	17.1	17.5	17.4		
			Mid.	16.5	16.7	16.8		
			Far	16.8	16.0	16.4	16.3	
		Right	Near	15.5	16.6	16.2		15.8
			Mid.	14.8	17.4	17.9		
			Far	15.2	14.8	14.5		
	am							
12/Jun.	10:15	Left	Near	15.7	17.1	17.5		
			Mid.	16.0	16.6	16.7		
			Far	15.8	15.3	16.6	15.8	
		Right	Near	14.4	15.5	16.4		15.3
			Mid.	15.3	16.0	15.1		
			Far	14.8	14.9	15.0		
	pm							
	1:50	Left	Near	14.2	14.6	14.4		
			Mid.	14.1	15.0	15.9		
			Far	15.0	15.1	15.4	14.5	
		Right	Near	14.2	13.7	14.5		14.2
			Mid.	14.3	15.3	14.6		
			Far	13.4	12.9	14.3		
	pm							
	3:50	Left	Near	13.3	13.7	13.6		
			Mid.	13.9	14.8	15.8		
			Far	14.7	15.0	14.8	14.2	
		Right	Near	13.5	14.8	13.9		13.9
			Mid.	13.9	14.5	14.6		
			Far	13.9	13.4	13.9		
13/Jun.	After unloading	Observations of 28 samples, picked up from every bag					13.3	13.1

Table 6 Exhaust Flow Velocity and Forced Air Flow Volume in Experiemnt II

Date	Hour	Exhaust flow velocity				Air flow volume forced thru paddy mass	
		Location on paddy bed		Observations	Average	Volume of Air flow (2) (1)×12.6m² *	Ratio of air flow volume to paddy mass (3) (2) ÷ 1 947.88kg**
		Slope	Distance fr. fan				
				cm/s	cm/s	m³/s	m³/s/t
12/Jun.	3:05 pm	Left	Near	64	60	5.76	3.88
			Mid.	62			
			Far	54			
		Right	Near	62			
			Mid.	64			
			Far	56			

* 12.6 m² is area of false floor (both slopes of paddy bed).
** 1 947.88 kg is an average of paddy weights before and after the drying process as follows:

Net weight of paddy used			Removal of paddy moisture (3) (3) = (1) – (2)
Before drying (1)	After drying (2)	Average	
1 998.03 kg	1 897.73 kg	1 947.88 kg	100.30 kg (goes to Table 7.)

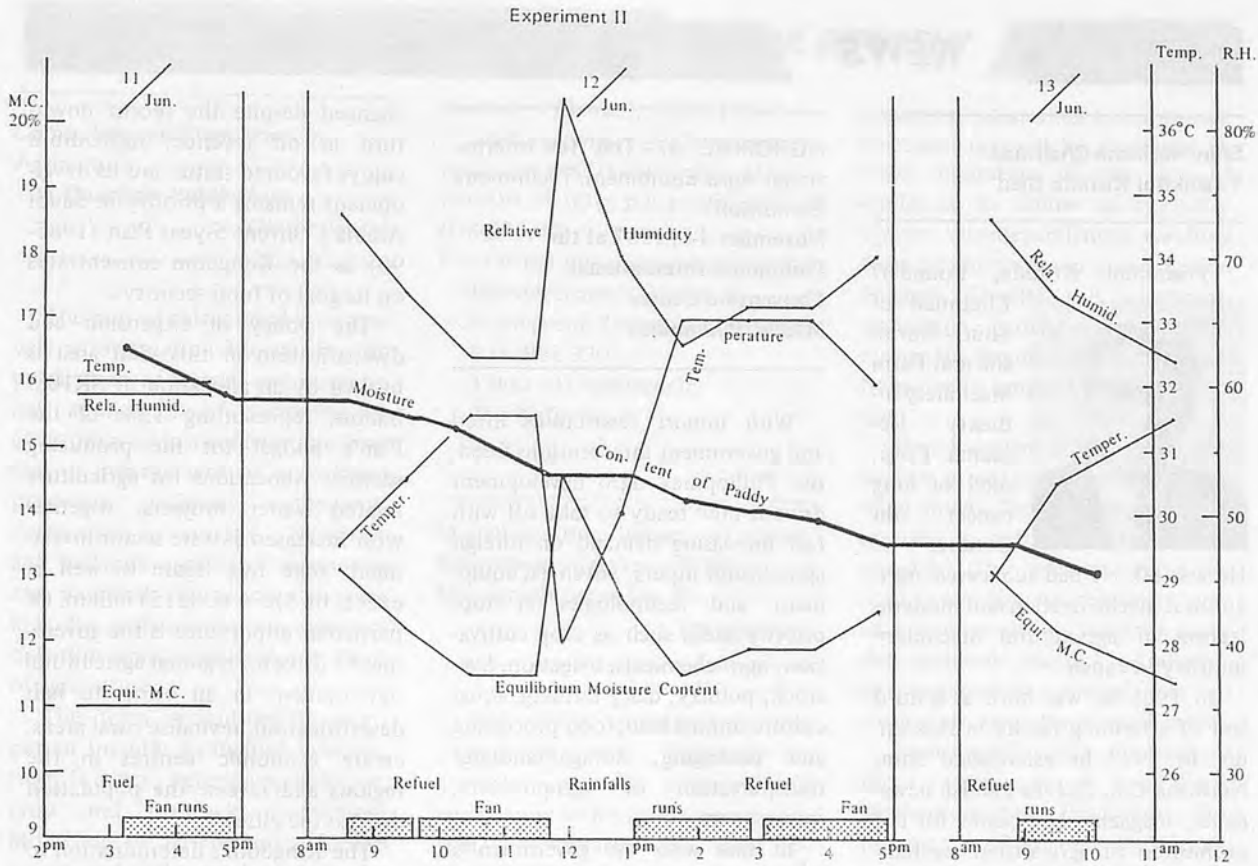

Summary

The findings out of Experiment I to VII are summarized into Table 7.

Table 7 Summary of Experiments

Experiment			I	II	III	IV	V	VI	VII
Period			30-31 May	11-13 Jun.	13-14 Jun.	26 Jun.	28-29 Jun.	16-18 Jul.	19 Jul.
Weather			Cloudy, occasionally rainy	Cloudy, occasionally fair or rainy	Fine or fair	Cloudy, occasionally rainy	Cloudy, occasionally fair	Fair, occasionally cloudy	Fine
Operation hours		(1)	7:12 (7.2 h)	9:36 (9.6 h)	7:04 (7.1 h)	4:59 (5.0 h)	7:14 (7.2 h)	12:33 (12.6 h)	8:22 (8.4 h)
Gasoline consumed		(2)	6.0 *l*	7.5 *l*	7.5 *l*	5.5 *l*	8.0 *l*	14.0 *l*	9.0 *l*
Removal of paddy moisture		(3)	68.47 kg	100.30 kg	91.02 kg	32.03 kg	54.21 kg	226.40 kg	155.41 kg
Removing rate = (3) ÷ (1)		(4)	9.51 kg/h	10.45 kg/h	12.82 kg/h	6.41 kg/h	7.53 kg/h	17.97 kg/h	18.50 kg/h
Removal gasoline ratio = (3) ÷ (2)		(5)	11.41 kg/*l*	13.37 kg/*l*	12.14 kg/*l*	5.82 kg/*l*	6.78 kg/*l*	16.17 kg/*l*	17.27 kg/*l*
			For reference						
Moisture content of used paddy	Initial (Moist)	(6)	14.3%	16.5%	15.1%	14.5%	15.2%	19.9%	18.2%
	Final (Dried)	(7)	12.3%	13.1%	12.3%	13.1%	12.9%	12.3%	12.9%
Drying rate = [(6)−(7)] ÷ (1)		(8)	0.28 %/h	0.35 %/h	0.40 %/h	0.28 %/h	0.32 %/h	0.61 %/h	0.63 %/h
Ratio of air flow volume to paddy mass			2.67 $m^3/s/t$	3.88 $m^3/s/t$	3.63 $m^3/s/t$	4.07 $m^3/s/t$	4.41 $m^3/s/t$	3.74 $m^3/s/t$	3.74 $m^3/s/t$

NEWS

Shin-Norinsha Chairman Yoshikuni Kishida Died

Yoshikuni Kishida, Founder/Chairman of Shin - Norinsha and Farm Machinery Industry Research Corp. died of lung cancer on October 1. He was 80. He had pioneered Agricultural mechanization and modernization of agricultural machinery industry in Japan.

In 1905 he was born as a third son of a farming family in Hokkaido. In 1933 he established Shin-Norinsha Co., Ltd. to publish newspaper, magazine and books for the promotion of agricultural mechanization and modernization of related industries. He had close cooperation with Japanese Society of Agricultural Machinery in the training of engineers. He also worked very hard for international technical exchange, especially for the promotion of agricultural mechanization in the developing countries.

His activities had been highly esteemed at home and from abroad. Japanese government conferred on him a decoration, Ranju-hooshoo in 1961, and also The Fourth Grade Zuihosho in 1967. American Society of Agricultural Engineers established the "Kishida International Award" to recognize agricultural developments around the world in 1977, and furthermore elected him a fellow in 1984. He had also received medals and letters of appreciation from the societies in the Republic of Korea, Taiwan and so forth for his contribution.

AGROPHIL 87—The 1st International Agro Equipment/Technology Exhibition

November 4-8, 1987 at the Philippines International Convention Center Manila, Philippines

With import restrictions lifted and government interventions freed, the Philippines' agro development drive is now ready to take off with fast increasing demand on foreign agricultural inputs, advanced equipment and technologies in top-priority areas such as crop cultivation, agro-chemicals, irrigation, livestock, poultry, dairy farming, aquaculture, animal feed, food processing and packaging, storage/handling/transportation of agri-products, forestry, etc...

In line with the government's endeavour and commitment to upgrade and expand her agricultural base, AVP Expositions Co., Ltd. (Hong Kong) is organising an international exhibition which showcases advanced equipment and agro-technologies tailored to the priority requirements of the Philippine's agricultural development in the coming years.

For details contact:

AVP Expositions Co., Ltd.
1201 Nan Fung Center,
264-298 Castle Peak Road, NT,
Hong Kong

Saudi Agriculture 87 – 6th Agriculture, Irrigation and Agro-Industry Show

April 5-9, 1987, Riyadh Exhibition Centre, Saudi Arabia

The Kingdom of Saudi Arabia's agricultural policy remains unchanged despite the recent downturn in oil revenue. Agriculture enjoys favoured status and its development remains a priority in Saudi Arabia's current 5-year Plan (1985-90) as the Kongdom concentrates on its goal of food security.

The policy of expansion and diversification in this vital area is backed by an allocation of SR10.8 billion, representing 12% of the Plan's budget for the producing sectors. Allocations for agriculture related water projects, together with increased private sector investment, take this figure to well in excess of SR54 (US$15) billion. Of particular importance is the government's drive for regional agricultural development in an effort to halt desertification, revitalise rural areas, create economic centres in the regions and reverse the population drift to the cities.

The Kingdom's determination to achieve a strong agricultural base is now being realised. During the last 5-year Plan wheat production rose from 242 000 tons to 2 million tons; poultry production increased from 40 000 tons to 177 000 tons and egg production rose from 41 000 tons to 132 000 tons. Dairy products increased from 27 000 to 97 000 tons.

Saudi Agriculture is the established showcase where manufacturers and suppliers of agricultural and associated products and services can demonstrate their expertise at the centre of this vital market.

For further information contact:

Overseas Exhibition Services Ltd.
11 Manchester Square
London W1M 5 AB
U.K.

Computers and Electronics in Agriculture
– A Quarterly Publication –
(Netherlands)

The aim of this journal is to provide an international forum for the publication of articles and notes on any application of computers or electronics to instrumentation, control or management of agricultural processes, activities, equipment, enterprises or systems. Hardware and software aspects of computers are included. Electronic coverage includes instrumentation, data acquisition and control of any facet of agriculture.

The term agriculture is interpreted broadly to include horticulture, forestry, veterinary medicine, crop and livestock production. Modelling of agricultural processes is included if the emphasis is on the use of modelling for management. The agricultural use of robotics in production falls within the scope of the journal. Management applications of information processing are also covered.

Papers on computers software are included provided that they are management or control applications. Not included are algorithms and programs for data analysis, design, modelling etc. without management application. Papers should be applications oriented – not abstract or theoretical studies.

Submission of articles – Manuscripts should be submitted in triplicate to the Editorial Secretariat, Computers and Electronics in Agriculture, Elsevier Science Publishers B.V., P.O. Box 330, 1000 AH Amsterdam, The Netherlands.

Publication schedule – *Computers and Electronics in Agriculture* is a quarterly publication, four numbers per year constituting one volume. Volume 1: 1985/1986.

Subscriptions – Subscription price for 1985/1986 is Dfl. 180.00 plus Dfl. 24.00 (p.p.h.) = Dfl. 204.00 (US $75.00)

For further information contact:
Elsevier Science Publishers
Science and Technology Division
P.O. Box 330
1 000 AH Amsterdam
The Netherlands

Modelling the Impact of Small Farm Mechanization – PIDS Monograph Series No. 5
(Philippines)

The papers contained in this monograph were designed to examine the impact of agricultural engineering technologies on production, employment and rural incomes. The first three focus on macro issues; a fourth addresses the choice of technique question at the farm level. The two general equilibrium models from the Philippines (Ahammed and Herdt) and from Indonesia (Ahammed and Duff), examine the effects of alternative mechanization policies on output, use of labor, total income and income distribution by farm and income group. This class of model measures both the direct and indirect impact of technological change and explicitly quantifies the multiplied effects of the consumption/production linkages between various sectors of the economy. These general equilibrium models are valuable tools in assessing the impact of various policy options.

The Webster–Herdt model is a simulation approach. This model is distinguished from the general equilibrium model by its non-deterministic nature and the form of the underlying equations. Structural equations, constraints and objective functions may all be nonlinear. A major limitation of this class of model is its failure to explicitly capture interdependencies resulting from production and consumption linkages. Despite this constraint, simulation provides a flexible means to examine *ex ante* projections over a range of policy alternatives.

The Rahman–Wicks paper describes a mixed integer programming model. This technique is widely used in both management and research. The present model incorporates discrete resources such as machines and is used to assess the economic viability of alternative equipment combinations for small-scale agricultural applications.

Each model is part of a study of the Consequences of Small Farm Mechanization on Production, Employment and Income in Selected Countries of Asia sponsored by the International Rice Research Institute in collaboration with research institutions in Indonesia, Thailand and the Philippines. The Philippine Institute for Development Studies has taken the lead in communicating the results of this research to development practitioners. Financial support for the study and publication of these results has been provided by the United States Agency for International Development.

Size: 23 cm x 15 cm, 104 pp, paper-bound

Published by International Rice Risearch Institute
P.O. Box 933, Manila, Philippines

BOOK REVIEW

Small Farm Equipment for Developing Countries

(Philippines)

Smallholder agriculture plays a very important part in the economy of most developing countries; a large proportion of their population is engaged in the production of food and feed. In Asia, over 60% of the farms are less than 2 ha.

Much research has been directed toward farmers cultivating these small areas. New high yielding varieties, improved management practices, chemicals for pest control, and the introduction of chemical and new organic fertilizers have all contributed to higher yield potential. For example, varieties of rice that have been developed produce in 100-120 d a grain yield equal to or greater than that of traditional varieties requiring 130 to 150 d.

To take advantage of the new varieties, improved practices, and chemical and fertilizer inputs, the small farmer needs to mechanize the operations of crop production.

Many constraints limit the introduction of machines into the agriculture of developing countrires. Small landholdings, excess labor in the agricultural sector, and the lack of capital have limited the adoption of mechanization. Above all, the introduction of mechanization should not create serious problems where rural labor is plentiful. The impact of agricultural mechanization on female labor needs particular attention. The aim should be to reduce drudgery, improve efficiency and productivity, and generate diversified opportunities for labor employment.

Many workers in international and national research centers have developed and introduced machines to assist small farmers. Some programs have been very successful; others have failed to meet their objectives.

Eighty-seven research workers from 22 countries gathered at IRRI 2-7 September 1985 for the conference "Small Farm Equipment for Developing Countries: Past Experiences and Future Priorities." They shared experiences in developing machines for small farmers and reviewed and evaluated the results. After presentation of papers, committees met to develop recommendations for future work. The recommendations provide guidelines for those who will be developing programs of mechanization for small farms.

Size: 23 x 15 cm, 629 pp, softcover

Published by I.R.R.I.

Consequences of Small Farm Mechanization in Indonesia

(Indonesia)

Edited by Faisal Kasryno, Mahyuddin Syam, Yusuf Saefuddin, S.O. Manurung and Paul Mundy

The Consequence of Small Farm Mechanization Project in Indonesia is the result of a collaborative effort between the Indonesian Agency for Agricultural Research and Development, the Rural Dynamics Group of the Agro-Economics Survey of the Indonesian Department of Agriculture, the Agricultural Development Council, and the International Rice Research Institute.

The research work was divided into two major categories. First were a number of special case studies involving examination of mechanization at several locations throughout Indonesia. These studies were largely, although not completely, sponsored by the Agricultural Development Council (A/D/C) and involved primarily graduate students conducting thesis and dissertation research. A total of 25 Indonesian Ph.D. and M.Sc. students used data from the project in their research work.

The second aspect of the study involved a comprehensive set of surveys at two sites. One site was in Subang and Indramayu districts in West Java. This was under the direction of the Rural Dynamics Study Group. A second site in Pinrang and Sidrap Districts in South Sulawesi was directed by the Socio-Economics Department at Maros Research Institute for Food Crops (MORIF).

Workshops to summarize the research results were held over a three week period from July-August 1983 in West Java, South Sulawesi and Jakarta.

Size: 24.5 x 18 cm, 347 pp, softcover

Published by I.R.R.I.

Land Preparation in West Java

(Indonesia)

By I. Ketut Nehen and Ian R. Wills

The available land preparation techniques in West Java are manual land preparation, animal land preparation using buffaloes, and tractor land preparation using two-wheeled tractors. Using social benefit-cost analysis, the objectives of this study were to examine the most desirable land preaparation technique in West Java, from the point of view of (1) individual farmers, measuring benefits and costs at market prices, and (2) society as a whole, measuring all benefits and costs of each tech-

nique at market prices, efficient prices, and with benefits and costs weighted according to the income levels of the beneficiaries.

The study used data collected in the IRRI Mechanization Consequences Study conducted in West Java during the 1979/1980 wet season and the 1980 dry season to examine the yield effects of each seasonal rice land preparation technique. The estimated production functions do not provide evidence on whether yields differ between techniques, so the analyses were performed assuming both equal and unequal yields between techniques. Other possible effects of each technique were ignored, partly because area expansion is almost impossible in densely populated parts of West Java, and partly because data from only two seasons are insufficient to examine change in cropping intensity and cropping patterns.

The results of the analyses suggest that the effect on yield, if any, of changing the land preparation technique is the most important factor in determining the optimum technique from the private farmer's point of view. If yields are equal for all techniques, hirer farmers seeking the lowest cost of land preparation find that animal and tractor land preparation are competitive during the wet season, while minimum tillage using manual labor is cheaper than tractor land preparation during the dry season. If yields are different and tractor and animal land preparation have higher yields than manual land preparation, tractor land preparation is optimum for hirer farmers.

From the point of view of farmers who own land preparation equipment, tractor land preparation is optimum provided that farmers use their tractor for 18 ha per season. However, the IRRI data suggest that the average utilization of each tractor was only 13 ha per season, making the tractor renting business slightly unprofitable. In this situation, tractor land preparation is still optimum for large farmers, but not for small and medium farmers, who are better-off using manual land preparation.

Size: 25.5 x 17 cm, 159 pp, softcover

Published by I.R.R.I.

Engineering for Potatoes (U.S.A)

Edited by B.F. Cargill

The latest worldwide research on potato mechanization, harvesting, storage, equipment and quality is contained in 36 papers by key scientists from ten countries and ten growing regions.

Topics include – potato harvester performance, firmness tests, means of detecting and decreasing tuber damage, comparative effectiveness of rotary atomizers vs. hydraulic nozzles for disease control and vine kill, potato production from seeds vs. cutting, special handling for the chip market, potato utilization in third world countries, influence of chemical treatment, and effects of environmental factors.

This book is the result of a 1985 ASAE meeting held at Michigan State University where the world's top authorities on potato harvesting, handling, storage and quality shared their experience and expertise.

Size: 23 x 15.5 cm, 644 pp, paper-bound

Pre-publication Price: $19.75 ($24.50 after Jan. 1, 1987) plus $1.50 postage and handling).

Published by American Society of Agricultural Engineers, 2950 Niles Rd., St. Joseph, MI 49085-9659, U.S.A. ■■

INDEX TO ADVERTISERS

Arab Water World 5
Iseki & Co., Ltd. 2
Kobashi Kogyo Co., Ltd. 6
Mametora Agric. Machinery Co., Ltd. 87
Matsuyama Plow Mfg. Co., Ltd. 6
Sukigara Agric. Machinery Co., Ltd. 5
Toyosha Co., Ltd. 86

Co-operating Editors

— AFRICA —

Julien G. Van Lancker
Professor Visitor (Agricultural Engineering), University of Brundi, Brundi

George B. Hanna
Chairman, Agricultural Engineering Dept., College of Agriculture, Cairo University, Giza, Cairo, Egypt.

Arumugam Kandiah
Institute of Agricultural Research, P.O. Box 2003, Addis Ababa, Ethiopia.

David Boakye Ampratwum
Part-Time Lecturer, Agricultural and Food Engineering, University of Ghana, Legon, Ghana.

Md. Shahansha-ud-Din Choudhury
Faculty of Agriculture, University of Sokoto, P.M.B. 2346, Sokoto, Sokoto State,
Nigeria

Joseph Chukwugozium Igbeka
Associate Professor, Dept. of Agricultural Engineering, Faculty of Technology, University of Ibadan, Ibadan, Nigeria

E.U. Odigboh
Professor & Head of Agricultural Engineering Department, University of Nigeria, Nsukka, Nigeria

Kayode C. Oni
Senior Lecturer, Dept. of Agricultural Engineering, University of Ilorin, P.M.B. 1515, Ilorin, Nigeria

N.G. Kuyembeh
Dean, Faculty of Agriculture and Head, Dept. of Agric. Engineering, Njara University College, University of Sierra Leone, Sierra Leone

Abdien Hassan Abdoun
Director, General Administration for Engineering, Ministry of Agric., F & NR., Khartoum, Sudan (Until Dec., 1983: c/o The National Agric. Training Centers, Ministry of Agriculture and Water, P.O.Box 558, Riyadh, Saudi Arabia)

Mohamed A. Bedri
Director of Industrial Projects Implementation Administration (Projects Bureau), Ministry of Industry P.O.Box 715, Khartoum, Sudan

Amir Bakheit Saeed
Lecturer, Dept. of Agricultural Engineering, Faculty of Agriculture, University of Khartoum, Khartoum, Sudan

Naresh Chandra Saxena
Contract Officer, Dept. of Agricultural Engineering and Land Planning, Sokoine University, P.O. Box 3003 Morogoro, Tanzania

— AMERICAS —

Irenilza de Alencar Nääs
Assistant Professor, Agricultural Engineering Dept., State University of Campinas, SP, Brazil

Abdelkader Elmetwally Ghaly
Associate Professor, Agric. Engineering Dept., Faculty of Engineering, Technical University of Nova Scotia, Halifax, Nova Scotia, Canada

A.A. Valenzuela
Head, Agricultural Engineering Department, University of Conception, Chillan, Chile

Armed Hossain Mirdha
Professor and Head, Agricultural Production Area, Centre of Research in Agricultural and Livestock Sciences, Sierra Unit, Autonomous University "Juarez" of Tabasco, Apdo. Postal-960, Admon. de Correos No2 C.P. 86100 Villahermosa, Tabasco, Mexico

William J. Chancellor
Professor, Agricultural Engineering, University of California, Davis, California 95616, U.S.A.

Merle L. Esmay
Professor, Agricultural Engineering, Michigan State University, East Lansing, Michigan 48823, U.S.A.

Megh Raj Goyal
Associate Agric. Engineer, Fortuna Research and Development Center, HC-02-Box 7115, Juana Diaz, PR 00665-9601, U.S.A.

Krishna Prakash Srivastava
CFTC Expert, Agrkc. Engineer (Soil and Water), Caribbean Agric. Research and Development Institute, Friars Hill, P.O. Box 766, St. John's, Antigua (W.I.)

— ASIA and OCEANIA —

Shah M. Farouk
Professor, Dept. of Farm Power & Machinery, Bangladesh Agricultural University, Mymensingh, Bangladesh

Mohammed A. Mazed
Chief Scientific Officer & Head of Agricultural Engineering Div., Bangladesh Agricultural Research Institute, Joydebpur, Dhak, Bangladesh

Manbahadur Gurung
Horticulture Extention Officer, Ministry of Development, Dept. of Agriculture, HA Bhutan P.O.HAA, Bhutan

Wang Wanjun
Chief Engineer and Vice Director of the Chinese Academy of Agricultural Mechanization Sciences, No.1 Beishatan, Deshengmen Wai, Beijing, China

Satish Chandra
Assistant Director of Agriculture, Koronivia Research Station, Ministry of Agriculture and Fisheries, P.O.Box 77, Narsori, Fiji

A.M. Michael
Professor, Water Technology Center, Indian Agricultural Research Institute, New Delhi 110012, India

S.R. Verma
Dean, College of Agricultural Engineering, Punjab Agric. University, Ludhiana 141004, India

Soedjatmiko
Head of Subdirectorate of Agricultural Engineering, Ministry of Agriculture, Djakarta, Indonesia

Jun Sakai
Professor, Dept. of Agricultural Engineering, Faculty of Agriculture, Kyushu University 46-05, Hakozaki, Higashi-ku, Fukuoka 812, Japan

Bassan A. Snobar
Associate Professor, Faculty of Agriculture, University of Jordan, Amman, Jordan

B A Snobar | C J Chung | Imad Haffar | M Z Bardaie | B K Shrestha | M Afzal | A D Chaudhry | M S Chaudhry | B T Devrajani | A A Mughal

Surya Nath | R M Lantin | C C Lee | R P Venturina | M H A Aziz | S Illangantileke | S Kathirkamathamby | T S Peng | G Singh | Y pinar

A P Kaloyanov | T Pedersen | G Pellizzi | A Moens | J Kilgour

Chang Joo Chung
Professor, Dept. of Agricultural Engineering, College of Agriculture, Seoul National University, Suweon, Korea

Imad Haffar
Assistant Professor of Agricultural Mechanization, Dept. of Soils, Irrigation and Mechanization, Faculty of Agriculture and Food Sciences, American University of Beirut, Beirut, Lebanon

Muhamad Zohadie Bardaie
Associate Professor, Faculty of Agricultural Engineering, University of Agriculture Malaysia, Serdang, Selangor, Malaysia

Bala Krishna Shrestha
Agricultural Engineer, 4/141, Pulchowk Behind the Fire Brigade, Lalitpur, Nepal

Mohammad Afzal
Senior Engineer (Mechanization Engineer), Farm Machinery Institute, National Agric. Research Centre P.O. NIH, Islamabad, Pakistan

Allah Ditta Chaudhry
Associate Professor and Chairman of the Department of Farm Machinery and Power, University of Agriculture, Faisalabad, Pakistan

Muhammad Siddique Chaudhry
280 Roger Williams Ave #35 East Providence, R.I. 02916, U.S.A.

Bherulal T. Devrajani
Principal Investigator, Sind Agricluture University, Tandojam, Sind, Pakistan

A.A. Mughal
Associate Professor, Faulty of Agricultural Engineering, Sind Agriculture University, Tandojam, Sind, Pakistan

Surya Nath
Lectuer II (Agricultural Engineering) Dept. of Agriculture, University of Technology, Lae, Papua New Ginea

Reynaldo M. Lantin
Dean, Institute of Agricultural Engineering and Technology, University of the Philippines at Los Baños, College, Laguna 3720, Philippines

Chul Choo Lee
Project Engineer, Projects Department Asian Development Bank, P.O.Box 789, Manila, Philippines

Richardo P. Venturina
Assistant Scientist for Agricultural Research, National Science Development Board, P.O.Box 3596, Rizal, Manila, Philippines

M.H. Abdel Aziz
Professor of Irrigation Engineering and Head, Agricultural Engineering Dept., Riyadh Univ., Saudi Arabia

S. Illangantileke
Head, Department of Agricultural Engineering, Faculty of Agriculture, University of Peradeniya, Sri Lanka

Suppiah Kathirkamathamby
Head, Agricultural Engineering Research and Development Division, Dept. of Agriculture, Peradeniya, Sri Lanka

Tien-song Peng
Specialist, Plant Industry Div. Joint Commission on Rural Reconstruction 37, Nanhai Road, Taipei, Taiwan

Gajendra Singh
Associate Professor of Agricultural Engineering, Asian Institute of Technology, Bangkok, Thailand

Yunus Pinar
Assistant at Agricultural Engineering Department, Atatürk University, Erzurum, Turkey

-- EUROPE --

Anastas Petrov Kaloyanov
Professor & Head of the Research Laboratory on Farm Mechanization, Higher Institute of Economics, Sofia, Bulgaria

T. Touggaard Pedersen
Professor, Agricultural Engineering at the Royal Veterinary and Agricultural University, Copenhagen, Denmark

Giuseppe Pellizzi
Professor, Institute of Agricultural Machinery, University of Milano, Via G. Celoria 2–20133 Milano, Italy

Adrian Moens
Professor & Head, Dept. of Agricultural Engineering, Agricultural University, Dr. S.L. Mansholtlaan 12, Wageningen, Netherlands

John Kilgour
Lecturer in Engineering Drawing and Design, National College of Agricultural Engineering, Silsoe, Bedford, MK45 4DT, U.K.

BACK ISSUES

(Vol. 16 No. 1, Winter 1985~)

AGRICULTURAL MECHANIZATION IN ASIA, AFRICA AND LATIN AMERICA (Vol. 16, No. 1, Winter 1985)

Editorial (Yoshisuke Kishida) 9
Boat-Tractor Hull Design to Minimize Drag Forces (N.C. Thai, W.J. Chancellor) 11
Energy Conservation in Mechanized Agriculture in Chile (Edmundo J. Hetz) 18
Cocoa Drying and Storage Using Charcoal and Solar Heated Rocks (Edward Baryeh) 23
Comparative Use of Moldboard and Chisel Plows on Wheat Yield and Weed Density in Iraq (Lufti Hussain Mohammed Ali) 29
Improved Disc Harrow with Solid Shaft and Casehardened Bush Bearings (Deepak Choudhri, Hem Chandra Joshi) 31
Animal-Drawn Wheeled Tool Carrier: An Appropriate Mechanization for Improved Farming Systems (Harbans Lal) 38
The Use of Fluid Drilling and Soil Conditioning Techniques for Spring-Sown Onions (S.M. Ward, F. O'Driscoll) 45
Design Parameters of Mole Drainage System in Bangkok Soil (Ahmad Ali Hassan, Apichart Anukularmphai) 49
Storage Practices for Yam in Nigeria (J.C. Igbeka) 55
Power Tiller Industry in India (S.S. Tomar) 59
Status of Dung Utilization in India and its Prospects (H.C. Joshi, R.C. Jakhmola, D.N. Kamra) 63
Mechanization of Sugarcane Farming in India (R.N.S. Yadav) 67
Measurement of Properties of Rice Husk Boards: Part I Physical and Mechanical (B.D. Shukla, T.P. Ojha, C.P. Gupta) 72
News 83
Book Review 85

◇ ◇ ◇

AGRICULTURAL MECHANIZATION IN ASIA, AFRICA AND LATIN AMERICA (Vol. 16, No.2, Spring 1985)

Editorial (Yoshisuke Kishida) 9
Dynamic Behaviour of Wet Soil and Tillage and Traction in Wet Land (N.K. Awadhwal, C.P. Singh) . . . . C.P. Singh) 11
Appropriate Technology-Animal-Drawn Equipment for Small Farmers in Nūble, Chile (Mario Ibanez C., Edmundo J. Hetz) 21
Improved Animal-Drawn Moldboard Plough Utilizing Available Draft power (A.A. Mainul Hussain, S.M. Farouk, N.N. Sarker) 25
Design Characteristics and Performance of Wind Mills for Pumping Irrigation Water (B.V. Ramana Rao, S.C. Chowdhry, P. Sharma) 27
Simple Attachments to Indian Country Plough (Ghanshyam Das, Avinash Agarwal) 30
Windpump for Irrigation in Hararghe Region of Ethiopia (Peter Burudi, K.P. Srivastava) 33
A Tractor-Mounted Digger for Potatoes (G.C. Misener) 39
Design, Development and Field Evaluation of Vertical Conveyor Reaper Windrower (R.S. Devani, M.M. Pandey) 41
Measurement of Properties of Rice Husk Boards: Part II (B.D. Shukla, T.P. Ojha, C.P. Gupta) 53
Suitability of Flexible Packaging Films for Rice, Dal and Wheat Flour (Mridula Bhattacharjee, Surya Nath) 61
Combustion Process of Rice Husk for Amorphous Silica Production (H.D. Banerjee, A. Chakraverty, A.K. Mahapatra, P. Nishra) 67
Results of an Opinion Poll on Safety Features of Tractors in India (N.S. Sandhar, J.P.S. Malhotra) 72
Status of Agricultural Machinery Manufacturing in Sind, Pakistan (Muhammad Saleh Soomro, Sheruddin B. Bukhari) 75
Need for Smallholding Mechanization in Pakistan (A.Q.A. Mughal) 79
Abstract 82
News 83
New Products 85

◇ ◇ ◇

AGRICULTURAL MECHANIZATION IN ASIA, AFRICA AND LATIN AMERICA (Vol. 16 No. 3, Summer, 1985)

Editorial (Yoshisuke Kishida) 9
Notes on Agricultural Machinery Manufacture in the Developing Countries of Asia (Adrian G. Rijk) . . . 11
A Stationary Threshing Machine: Design, Construction and Performance Evaluation (A.E. Ghaly) 19
Modification and Testing of Bullock-Drawn, Single-Row Corn Planter (Jan Muhammed Baloch, A.Q.A. Mughal) 31
Weed Control through Inter-Row Cultivation in Upland Rice (C.M. Singh, K. Moody, S.C. Cho) 35
Electrostatic Spraying with a Knapsack Sprayer (E. Moser, Md. Daulat Hussain) 41
Partial Mechanization of Sugarcane Harvesting (M.P. Sharma, Kishan Singh) 47
A Study of Traditional and Mechanized Systems for Maize Production (U.G.N. Anazodo) 51
Need for National Cooperative Tillage Research in Pakistan (M.A. Choudhary) 57
Sunflower Oil: An Anticipated Diesel Fuel Alternative (Abdul Rehman Tahir) 59
Auditing Appropriate Technology Appropriately (Sushila Saxena, Naresh Chandra Saxena) 65
Mechanization of Sugarcane Farming in India (B.K.S. Jain) 67
Importance of Agriculture in the Oil-Rich Kingdom of Saudi Arabia (Fallak S. Sial) 70
The Nebraska Test Procedure—Using the Results (Louis I. Leviticus) . . . 77
Abstracts 84
News 85

◇ ◇ ◇

AGRICULTURAL MECHANIZATION IN ASIA, AFRICA AND LATIN AMERICA (Vol. 16, No. 4, Autumn, 1985)

Editorial (Yoshisuke Kishida) 9
Economics of Tractor Operation in Swaziland (Harry D. Henderson, Wolfgang Guericke) 11
Animal-Drawn Wheeled Tool Carrier in India under On-Farm Conditions (V.M. Mayande, R. Sarin, G.E. Thierstein) 17
Evaluation of Manual Planters for Selected Crops in West African Savanna (M.S.U. Choudhury) 25
Spray Characteristics of a Rotary Atomizer (Shane M. Ward) 30
A Kinetic Analysis of Large Rounding Jet-Irrigation Apparatus (Zong Sheng-Yu) 33
Comparison of Axial-Flow and Centrifugal Pumps for Low-Lift Irrigation (Edwin J. Calilung, Godofredo C. Salazar, Celerina L. Maranan, Robert E. Stickney) 35
Efficiency of Resource Use in a Tube Well Irrigation Scheme in Sri Lanka (H.M.G. Herath) 39
Effect of Irrigation on Cotton Yield in Southern USSR (Tashkent) (Md. Motiur Rahman Khan) 43
Performance of Indigenous Hand Weeders in Bangladesh (Md. Syedul Islam, Khondaker Azharul Haq). . . 47
Mechanical Harvesting of Cotton in the Sudan (Mahmoud Hassan Ahmed) 51
Study of a Segmented Paraboloid Type Solar Heat Collector (M.H. Pahoja, C.N. Gangde) 54
Impact of Farm Technology and Energy on Developing Agriculture (M.A. Choudhary) 59
Status of Mechanization on Hilly Farmlands of Puerto Rico (Megh R. Goyal, Felix R. Rivera-Negron, Eliodoro J. Ravalo, Rene Otero-Davila, William F. Allison) 65
Machinery Selection Concerning Farm Sizes (S. Swain, T.P. Ojha). 69
Two New Principles of Weighing: Bicycle Wheel as Balance and Dynamometer (F.F.R. Koenigs). 73
Qualities of Retted Flax and Degummed Fibers for Commercial Use (A.C. Datta, N.G. Bhole) 76
News 81
Book Review 83

AGRICULTURAL MECHANIZATION IN ASIA, AFRICA AND LATIN AMERICA (Vol. 17, No. 1, Winter, 1986)
Editorial (Yoshisuke Kishida) 9
Problems of Agricultural mechanization in Developing Countries (Arno Gego) 11
Performance of Power Tiller Blades (J.M. Baloch, J. Kilgour, S.B. Bukhari, A.Q.A. Mughal) 22
The Combi-Plough—An Animal-Drawn Implement System in Kenya (H.C.P. de Vries, O.J.T.M. de Weert) 27
Tractor-Drawn Combination Tillage Tool (V.J.F. Kumar, R. Manian) 31
Float Harrow and its Performance (P. Dutt, B.C. Parida, A.K. Choudhury) 37
Groundnut Crop Moisture Content and Rotor Speed in Stripping (S. Thangavelu, K.R. Swaminathan) 39
Field Investigation on the Direct Seeding of Coated Rice in Thailand (Masayuki Koike, Vicha Manthamkan, Jugal K. Agarwalla, Kundan Lal Ganjoo) 42
Performance and Vibration Control of Tractor-Mounted Oscillatory Potato Digger (A.P. Sharma, S.R. Verma) 47
Improvement of Manually-Operated Water Lifting Device (Mesbauddin Ahmed, C.M.A. Khan) 51
Analysis of Forces Acting on Mole Plough in Mole Drainage Practice (Rahamatullah Malik, P.B. Leeds Harrison, Muhammed Saleh Soomro, Gulzar Ali Shah) 55
Hill Land Mechanization in Puerto Rico (Eliodoro J. Ravalo, Felix R. Rivera Negron, Megh R. Goyal, Carlos Almodovar) 59
Graphical Determination of Cost of Operation on Agricultural Machines (M.M. Pandey, T.P. Ojha) 63
Optimization of Machinery Systems (Edmundo J. Hetz, Merle L. Esmay) 68
Agricultural Machinery and Implements Industry: Problems and Status Quo (Munir Ahmad Sargana, S. Iqbal Ahmad, Jawed Kishwer) 77
A Moral Story Handed Down in Europe (Tatsuo Tanoue) 81
News 83
New Products 84
Book Review 85

◇ ◇ ◇

AGRICULTURAL MECHANIZATION IN ASIA, AFRICA AND LATIN AMERICA (Vol. 17, No. 2, Spring, 1986)
Editorial (Yoshisuke Kishida) 9
A Pole-Drawn Toolbar for Animal Traction (J.W. Dogger, M. Kersten) 11
Zero-Tillage in Wheat Crop under Heavy Soils (S.D. Dhiman, A.P. Sharma) 15
Economic Evaluation of Tillage Operations in Some Mechanized Farms in Nigeria (J.C. Igbeka) . . . 17
Work Capacities and Fuel Consumptions of Hand Tractors Manufactured in the Philippines (Cornelio J. Ancheta, Roberto C. Bautista) . . . 23
Photoelastic Investigations for Stresses Due to Soil-Tillage Disc Tool Interaction (R.N.S. Yadav, C.P. Gupta, B. Pradhan) 27
Seed Distribution Performance of the Furrow Openers Used on Drill Machines (Aziz Özmerzi) 32
Design, Construction and Performance of a Manually-Operated Seeding Attachment for an Animal-Drawn Cultivator (K. Kumar, N.K. Naresh, T.P. Ojha) 35
Some Fundamentals of Electrostatic Spraying (Md. Daulat Hussain, E. Moser) 39
Irrigated Agriculture: Making the Most of Available Resources (J. Ohiukwu Duru) 46
An Improved Cutting and Bunching Machine for Harvesting Grain Crops in Bangladesh (Md. Mahabubur Rahman Mollah, John Kilgour) . . . 49
Large-Scale Drying System for Paddy (Zang Sheng-yu) 55
Improved Nomographs for Estimating Efficiency and Capacity of Agricultural Field Operations (Harbans Lal) 57
Mathematical Model for Selecting Wheat Threshing Systems for Farms in North India (M.L. Gupta, Gajendra Singh, P.K. Gupta) 61
Agricultural Mechanization Facilities in Sind, Pakistan (A.A. Channar, B.T. Devrajani, A.Q.A. Mughal, S.B. Bukhari) 68
Comparison of USA and Japanese Agricultural Mechanization Models (Fallak S. Sial) 71
Indigenous Production of Agricultural Machinery in Pakistan (Munir Ahmad Sargana, Amjad Pervez Chaudhary, Mohammad Afzal) . . . 75
Abstract 79
News 81
New Products 82
Book Review 84

◇ ◇ ◇

AGRICULTURAL MECHANIZATION IN AISA, AFRICA AND LATIN AMERICA (Vol. 17, No. 3, Summer, 1986)
Editorial (Yoshisuke Kishida) 9
Soil Bin Studies of Tillage-Line Forces (Jan Md. Baloch, Sheruddin B. Bukhari, Imam Bux Koondhar, Ali Akbar Channer, Ali Nawaz Mirani) 11
Drilling of Pelleted Paddy Seeds in Puddled Field (K.T. Maru, S.C.B. Siripurapu) 15
Optimum composition of Rubber Rolls for Paddy Shellers (R.P. Misra, C.P. Gupta, S.K. De) 19
Storability and Germination of Pre-Harvest Desiccated Paddy (P. Pillaiyar, S. Sethuraman, M. Nagarajan, R. Vaidhyalingam) 23
Simple and Low Cost On-Farm Paddy Dryer (Kocky Uyeda) 27
Mechanization of Paddy Cultivation in West Malaysia (Gajendra Singh, Lock Chin Kiong) 32
Losses of Rice During Milling in Commercial Rice Mills of Sri Lanka (W.V. Jayasena, S.G. Ilangantileke) 37
Mechanization of Small Farms in Tropical Africa (N.G. Kuyembeh) 41
Agricultural Mechanization as a Catalyst for Rural Development (U. G.N. Anazodo) 47
Influence of Natural Resources on Agricultural Mechanization (N.H. Laghari, A.Q.A. Mughal, B.T. Devrajani) 53
Intensity of Tillage Operation in Bangladesh (Md. Saleque Uddin, Md. R.I. Sarker) 57
Design, Development and Field Evaluation of a Oscillatory Potato Digger (A.P. Sharma, S.R. Verma A.S. Bansal) 60
Maintenance of Tree-Crop Plantations Using a Portable Motorized Weeder (Lawrence O. Fawole, A.A. Agboola) 63
Agricultural Structure Problems in Tropical Countries (Irenilza de Alencar Nääs) 67
Delivery System for Farm Machinery Technology in India (Gyanendra Singh, Triveni Prasad Ojha) 72
Abstract . . . . . .
News . . . . . .
New Products . . . . . .
Book Review . . . . . .

◇ ◇ ◇

AGRICULTURAL MECHANIZATION IN ASIA, AFRICA AND LATION AMERICA (Vol. 17, No. 4, Autumn, 1986)
Editorial (Yoshisuke Kishida) 9
Studies on Evolutional Steps for Plowing and Tractorization in Japan (Jun Sakai, Surin Phongsupasamit, Tadashi Kishimoto) 11
Effect of Restrained Linkage-Geometry on Tractor Performance (Jan Mohammed Baloch, Sheruddin B. Bukhari, A.Q.A. Mughal, Ali Nawaz Mirani) 20
Animal Draught: A Source of Power for Agricultural Development in a Developing Country (A. Bola Fashina, J.C. Igbeka) 25
Draught Animal Power Potential in North-Eastern Hill Region of India (S.D. Sahu) 29
A Simple Recorder for Monitoring Irrigation Water Flow (T.B.S. Rajput) 32
Factors Affecting Choice and Use of Tillage Implements: Pakistan Setting (Khawaja Altaf Hussain, Hafiz Muhammad Munir) 35
Factors Influencing Threshability of Maize in Nigeria (K.C. Oni, M.A. Ali) 39
Needs and Availability of Agricultural Machinery in Chile (Edmundo J. Hetz) 45
Farm Mechanization in Turkey (Aziz Özmerzi, Bahri Gökçebay) 49
Agricultural Engineering Potential in Caribbean Basin (Megh R. Goyal) 51
Useful Gadgets for Manufacture of Low-Cost Agricultural Machinery (S.R. Verma, Joginder Singh) 59
Performance and Tomato Yield in Cooled Greenhouse at Al-Hassa, Saudi Arabia (A.M. Abdalla, G.M. Al-Hassan, A.S. Al-Ghamdi, K.A. Sallam) 63
Nomographs for Sensible Heat Carried out of Furnace by Products of Combustion (K. Kumar, S. Bal) . . 68
Factors Influencing Effectiveness of Radio-Frequency Dielectric Heating on Rice Bran (V.V. Sreenarayanan, P.K. Chattopadhyay) 71
Simple and Low Cost on-Farm Paddy Dryer (Part-II) (Kocky Uyeda) . . . 75

HINOMOTO® CREATES A SENSATION IN THE TRACTOR INDUSTRY AND FORMS A NEW ERA IN THE HISTORY OF PLOWING METHODS

POWER DISC

TOYOSHA *does the best to contribute in mechanization of the small sized farmers with sincerity and cooperative relationship.*

		APPLICABLE TRACTOR
F-400	(4Blades)	20~30ps
F-500	(5Blades)	25~35ps
F-700	(7Blades)	30~60ps
F-800	(8Blades)	50~80ps

since 1863

TOYOSHA CO.,LTD.

55, Joshoji-16, Kadoma-city, Osaka, 571 Japan
Cable: TOYOSHA NEYAGAWA
Telex: 05347763 MBTRAC J

HINOMOTO®

MAMETORA DEDICATES TO AGRICULTURE ALL OVER THE WORLD

Researches and Development
Unequaled Wealth of experiences and technology

It is the motto of MAMETORA that we manufacture goods in order to meet customer's benefits with originality trusty and hearty. In addition to the head office in Okegawa Kisakata Factory has been established. Now that we have formed the much steadier basis as a comprehensive manufacturer. We are always making efforts to manufacture goods of high quality and are pleased to devote ourselves to the food industry in the world as well as that in Japan.

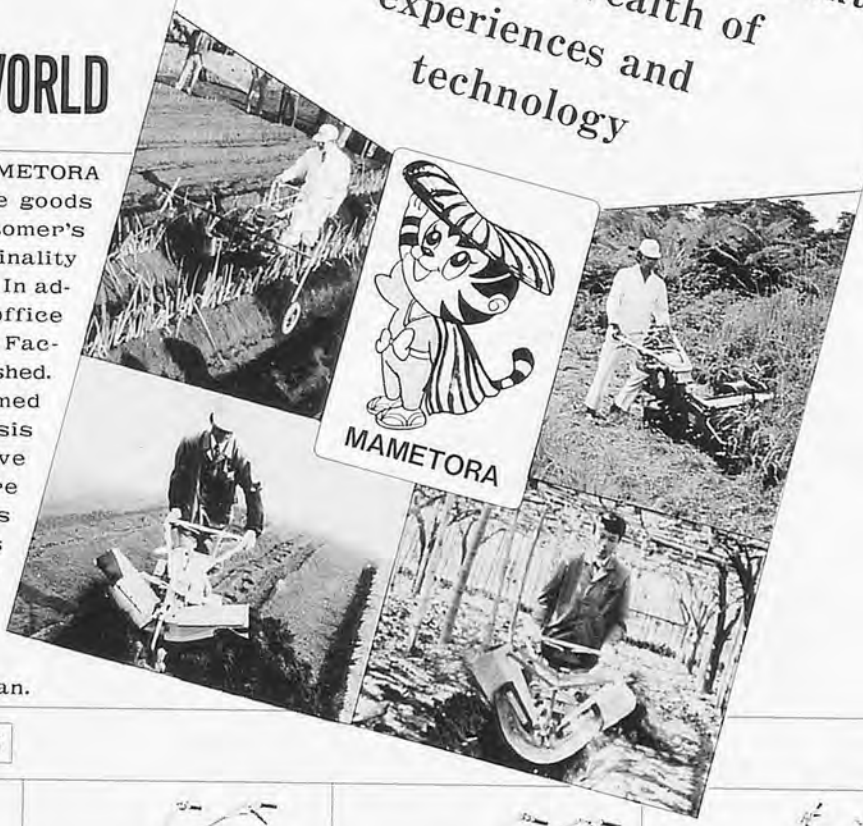

EXPORT SERIES

MC-80R Multing Rotor Set

MC-100

MC-130E

MC-181SB

MC-200

MC-210 スキ付

LV-1

LV-2

MAMETORA AGRIC. MACHINERY CO., LTD.

HEAD OFFICE ADD : 9-37, NISHI-2 CHOME, OKEGAWA-SHI, SAITAMA-KEN, JAPAN.
TELEPHONE : 0487-71-1181 TELEX : 2922561 MAMETO-J