International specialized medium for agricultural mechanization in developing countries

ISSN 0084-5841

AMA

AGRICULTURAL MECHANIZATION IN ASIA, AFRICA AND LATIN AMERICA

VOL.XIV, NO.2, SPRING 1983

FARM MACHINERY INDUSTRIAL RESEARCH CORP.

Contributing to the mechanized farming, Iseki works its way.

The survival of a nation depends on how well its agriculture meets the needs of its people.

Since 1926, Iseki has devoted itself to developing agricultural equipment and technology capable of insuring our well-being and survival.

By developing unique farming technology, and striving for superior quality and improved technical services, Iseki promotes its vision of "better farming everywhere."

Iseki is concerned . . . and stands ready to share and communicate with all those engaged in improving the world through agriculture.

ISEKI & CO., LTD.

Foreign Affairs Division
3-6, Kioi-cho, Chiyoda-ku, Tokyo, 102 Japan
Cable Address: ISEKIRICE TOKYO
Telex: 232-2752, 232-2753
Phone: (03) 238-5245~5260

We promote mechanization for small sized farmers, and are sure to cooperate together.

The countries are far from each other, while it takes long time for the small sized farmers to mechanize the agriculture.

***TOYOSHA** does the best to contribute in mechanization of the small sized farmers with sincerity and cooperative relationship.*

since 1863

TOYOSHA CO.,LTD.

55, Joshoji-16, Kadoma-city, Osaka, 571 Japan
Cable: TOYOSHA NEYAGAWA
Telex: 05347763 MBTRAC J

EIMA BOLOGNA

BOLOGNA
16-20 NOVEMBRE 1983

Admission by invitation:
16-17-18 November

Admission to public:
19-20 November

international exhibition of agricultural machinery manufacturers

exhibition of gardening machinery

Organized by **PROMOZIONI UNACOMA S. p. A.**
with the collaboration of the ENTE AUTONOMO FIERE DI BOLOGNA

for further details :

eima 00161 ROMA-VIA L. SPALLANZANI 22/A
TEL. (06) 855787 TELEX 614126 -TELEGRAMMI (UNACOMA-ROMA)

YAMAMOTO STIR DEPOT

Features
- Drying while stiring eliminates rotation
- process.
- Stiring operation limits air resistance and
- saves energy through less horsepower.
- Drying process is performed under conditions of 18 to 20 percent moisture up to complete dryness in the normal temperature airing operation. This process saves energy and secures natural storage conditions.
- A blower and a stiring equipment are installed in each bin, permitting independent disposal work in each bin.
- This outdoor type can be attached to existing facilities.

SBD-6M · 8M · 10M

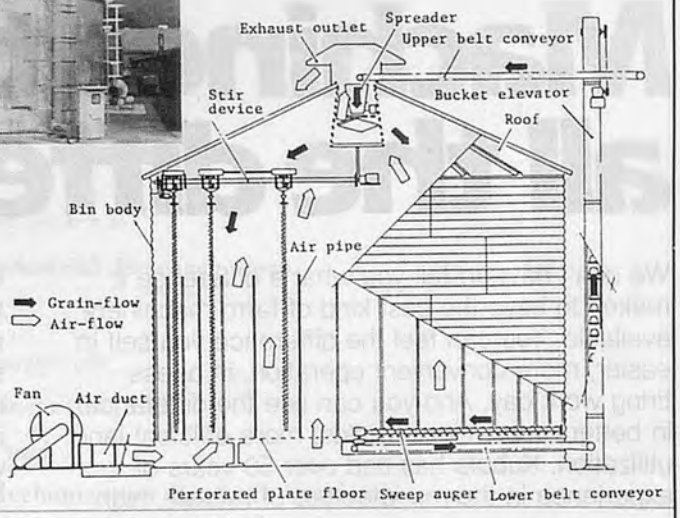

Specifications

Model			SBD-6M	SBD-8M	SBD-10M
Bin diameter		m (ft)	5.57(18.3)	7.96(24.9)	10.35(34.0)
Overall height		m (ft)	7.80(25.6)	8.40(27.6)	9.80(32.2)
Max. loading level		m (ft)	3.5(11.5)		
Floor area		m² (ft²)	24.4(262.6)	49.8(536.1)	84.1(905.3)
Max. volume		m³ (ft³)	83.3(2943.5)	166.7(5890.5)	277.8(9816.3)
Max. holding capacity	Paddy	t	50	100	180
	Wheat	t	60	120	200
Fan	Type		L.L.F.4½ ±	L.L.F.5½ ±	L.L.F.7 ±
	Power req.	KW(HP)	5.5(7.4)	11(14.8)	15(20.1)
Drying rate per hour		%	0.015 (at normal temperature)		
Fuel consumption		l (gal./h)	2 – 3.5(0.5 – 0.9)	3 – 7(0.8 – 1.8)	5 – 12(1.3 – 3.2)
Max. loading capacity		t/h	20		
Max. unloading capacity		t/h	10		
Total power required		KW(HP)	14.23(19.1)	19.73(26.5)	24.73(33.2)

Working with farmers effectively and scientifically

YAMAMOTO MFG. CO.,LTD.

Tendo-shi, Yamagata-ken, 994, Japan. Telex: 8722-66

Machines that make all the difference

We don't have to tell you what a difference it makes to have the best kind of farm machinery available. You can feel the difference yourself in easier, more convenient operation, in a less tiring work day. And you can see the difference in better crops, higher yields, more efficient land utilization. Kubota has had over 50 years of experience in the manufacture of reliable, high quality agricultural machinery. Tractors, tillers, transplanters—whatever kind of agricultural machinery or equipment you require, Kubota can supply it. And Kubota is constantly working to improve its products so that it can help you to improve your productivity. Kubota wants to see you get the best you can out of your land, and spend less time and energy doing it.

KUBOTA

Kubota, Ltd. 2-47, Shikitsuhigashi 1-chome, Naniwa-ku, Osaka, Japan

International specialized medium for agricultural mechanization in developing countries

AMA

AGRICULTURAL MECHANIZATION IN ASIA, AFRICA AND LATIN AMERICA

VOL.XIV, NO.2, SPRING 1983

Edited by

YOSHISUKE KISHIDA

Published quarterly by

Farm Machinery Industrial Research Corp.

in cooperation with

The Shin-Norinsha Co., Ltd.

and

The International Farm Mechanization Research Service

TOKYO

Yoshisuke Kishida, Publisher & Chief Editor
Yoshikuni Kishida, Advisory Director
Morio Kamijo, Advisor

Contributing Editors and Cooperators

- AFRICA -
Van Lancker, Julien G. (Brundi)
Hanna, George B. (Egypt)
Kandiah, Arumugam (Ethiopia)
Ampratwun, David Boakye (Ghana)
Chaudhry, Md. Siddique (Libya)
Choudhury, Md. Shahansha-ud-Din (Nigeria)
Mittal, Jitendra P. (Nigeria)
Odigboh, E.U. (Nigeria)
Kuyembeh, N.G. (Sierra Leone)
Abdoun, Abdien Hassan (Sudan)
Bedri, Mohamed A. (Sudan)
Saeed, Amir Bakheit (Sudan)

- AMERICAS -
Nääs, Irenilza de Alencar (Brazil)
Phillips, Allan L. (Chile)
Valenzuela, A.A. (Chile)
Mirdha, A.H. (Mexico)
Goyal, Megh Raj (Puerto Rico)
Chancellor, William J. (U.S.A.)
Esmay, Merle L. (U.S.A.)

- ASIA and OCEANIA -
Farouk, Shah M. (Bangladesh)
Roy, Kshirode Chandra (Bangladesh)
Gurung, Manbahadur (Bhutan)
Wang, Wanjun (China)
Chandra, Satish (Fiji)
Michael, A.M. (India)
Verma, S.R. (India)
Soepardjo, Siswadhi (Indonesia)
Sakai, Jun (Japan)
Snobar, Bassan A. (Jordan)
Chung, Chang Joo (Korea)
Andreou, Paris (Lebanon)
Bardaie, Muhamad Zohadie (Malaysia)
Shrestha, Bala Krishna (Nepal)
Chaudhry, Allah Ditta (Pakistan)
Devrajani, Bherulal T. (Pakistan)
Mughal, A.A. (Pakistan)
Lantin, Reynaldo M. (Philippines)
Lee, Chul Choo (Philippines)
Venturina, Ricardo P. (Philippines)
Aziz, M.H. Abdel (Saudi Arabia)
Illangantileke, S. (Sri Lanka)
Kathirkamathamby, Suppiah (Sri Lanka)
Peng, Tien-Song (Taiwan)
Singh, Gajendra (Thailand)

- EUROPE -
Pedersen, T. Touggaard (Denmark)
Pellizzi, Giuseppe (Italy)
Moens, Adrian (Netherlands)
Kilgour, John (U.K.)

EDITORIAL STAFF
(Tel. 03/291-5718)
Yoshisuke Kishida, Chief Editor
Kensuke Sakurai, Managing Editor
Yoshinori Sasaki, Assistant Editor
Noriyuki Murамatsu, Assistant Editor

ADVERTISING
(Tel. 03/291-3672)
Kuniharu Ikeda, Manager (Head Office)
Shuji Kobayashi, Manager (Branch Office)
Advertising Rate: 300 thousand yen per a page

CIRCULATION
(Tel. 03/291-5718)
Soichiro Fukutomi, Manager
Editorial, Advertising and Circulation Headquarters,
7, 2-chome, Kanda Nishikicho, Chiyoda-ku, Tokyo, 101 Japan

Copyright © 1983 by
FARM MACHINERY INDUSTRIAL RESEARCH CORP.
SHIN-NORIN building
7, 2-chome, Kanda Nishikicho, Chiyoda-ku, Tokyo, 101 Japan
Printed in Japan

This is the 39th issue since the issue, Spring of 1971.

EDITORIAL

A decade or so ago, much of Asia started to take up agricultural mechanization in varying paces of adoption and forms – from the use of simple and inexpensive equipments such as the rotary cultivator or pedal threshers to the more complicated and expensive tractor and combine. The objective was common to all countries, developed or developing, i.e., to introduce efficiencies in farm operations, increase productivity levels and to relieve the farmer of the back-breaking toil in the use of draft animals as source of farm power.

When we look back and assess the general progress that has been attained in popularizing farm mechanization, a diffused pattern in the performance of the Asian countries emerges: a few countries have surged ahead in mechanizing almost every farming operation as mechanical power has totally substituted for draft animals as power source, notably Japan, and followed closely by Korea and Taiwan – the latter two being identified as newly industrializing countries. A few other countries, e.g., Malaysia, Philippines, Thailand and Sri Lanka are fast catching up in mechanizing many farming chores even as draft animals continue to be an equally important source of farm power in these countries. In comparison, many other developing Asian countries, for example, India, Pakistan, Indonesia and Nepal have yet to attain considerable headway in adapting agricultural mechanization. As a matter of fact, in the latter two countries, human and animal power continue to be important sources of farm power.

The foregoing pattern of the pace in the progress of agricultural mechanization in Asia, as perhaps elsewhere, is itself a very challenging area of research that should be studied in depth on a multi-disciplinary approach, e.g., a team of economists, sociologists, engineers and agronomists. Together, these disciplines should be able to explain in no uncertain terms why, for instance, agricultural mechanization in some countries advances at a fast pace and not in others. They should also be able to come up with meaningful observations that should guide governments, aid-givers, policy-makers, banking community, and manufacturers and distributors of farm machineries in making more rational moves to enhance agricultural mechanization aimed at increasing food availability world-wide.

As our readers will know well, 1971-80 AMA Abstracts and Index is now being printed and will be issued in May, 1983. We hope this publication will be an favorite source of information on agricultural mechanization for all the parties concerned.

Chief Editor
Yoshisuke Kishida

April, 1983
Tokyo

CONTENTS

AGRICULTURAL MECHANIZATION IN ASIA, AFRICA AND LATIN AMERICA

Vol. XIV, No.2, Spring, 1983

Yoshisuke Kishida	9	Editorial
Yang-ren Hwang	11	Development of Peanut Combine Harvester
Z. Karim A. J. M. S. Karim A. A. Pahlwan	17	Tillage and Irrigation on Water Use by Wheat in Grey Terrace Soil of Bangladesh
Surya Nath William H. Johnson	21	A Model of Field Grain Sorghum Moisture Contents
Gajendra Singh Uqaili Khalid Hussain	25	Modification and Testing of a Manual Rice Transplanter
Toshinori Kimura	31	Properties of Parboiled Rice Produced from Japanese Paddy
M. Shyam	34	Development and Evaluation of a Granular Insecticide Applicator
D. N. Sharma N. K. Bansal M. L. Jain	37	Design, Development and Testing of a Bullock-Drawn, Single-Row Seed-Cum-Fertilizer Drill
Md. Abdur Rab	41	Accuracy of Measurement of Soil Water by Neutron Probe
P. K. Chattopadhyay Prem Chand T. C. Mishra N. D. Patil	49	Pneumatic Separator for Various Rice Fractions
Choudhury Md. Amiruddin Khan	55	Development of Wheel Pump for Low-Lift Irrigation
K. V. Selvaraj V. Subramanian	59	Survey on Traditional Methods of Harvest and Post-Harvest Practices
Muhammad Afzal Usman Mustafa Tanvir Ahmad	62	Status of Selected Tillage Implements on Progressive Farms in Pakistan
Bashir Ahmad	65	Implications of Farm Mechanization for Employment, Productivity and Income
Kedar N. Nag A. N. Mathur	69	Performance Study of a Solar Cooker
A. Chakraverty N. C. Patel	72	Stabilization of Rice Bran by Conduction and Humid Heat Treatments
Shamsuddin A. Mahar	77	Use of Wind Power in New Zealand: Its Scope in Pakistan
News	82	
Book Reviw	85	

★ ★ ★

A Note to AMA Contirbutors 87
Co-operating Editors 88
Back Issues 90
Index to Advertisers 91

Development of Peanut Combine Harvester

by
Yang-ren Hwang
Associate Professor
Department of Agricultural Mechanical Engineering
College of Agriculture, National Chung Hsing University
Taichung, Taiwan

Abstract

In 1981, an average of 1 128 labor hours per ha was needed to produce peanuts in Taiwan – one-fifth of which was for harvesting usually done by hand. The Lilliston digger-shaker-windrower and peanut thresher were introduced from abroad by the then Joint Commission On Rural Reconstruction (JCRR) Now Council for Agricultural Planning and Development (CAPD) in the early 1970's. Experiments showed some defects of these big-type machines, including (i) unfit for small-sized farms in Taiwan; (ii) high rates of field damage and losses; (iii) unsuitable for local atmospheric conditions; and (iv) fairly high cost of operation.

The development of a small-type, self-propelling one-way-operation peanut combine harvester has been undertaken by the National Chung Hsing University since 1969. The criteria of the design are that (i) the peanut vines with pods can be pulled up from the ground and put in orderly rows throughout the mechanical process; (ii) field loss due to the high moisture content of stems when in mechanical operation is relatively small; (iii) the combine is small in size and driven by a 15 HP diesel engine; and (iv) the cleaning equipment doesn't require large space.

During the past 10 years, many kinds of mechanism have been test-produced and experimented for the purpose of developing a suitable peanut combine harvester. Among them is an automatic hydraulic system required to keep the height of stem-grasp position constantly in spite of the uneven surface of the ground. In order to grip the stems out off the field, a special form of chain-bar or embanking-ditching belt should be made available. In order to put the stems regularly into the harvester to receive mechanical treatment through limited power, a stem-combing device is desirable. A string type of pod-nipper operates excellently in picking performance with negligible damage and losses.

Acknowledgement: This study was supported in part by the Council for Agricultural Planning and Development, Executive Yuan.

Introduction

Peanut is a major crop in Taiwan occupying about 100,000 ha or 13% of the total crop land. They are mostly cultivated in sandy soil along the western coast of the country while some are planted at the river-side. In 1981, an average of 1 128 labor hours were required to grow 1 ha of peanuts – calculated on the basis of 1.69 kg per labor hour.

According to a survey, one-fifth of this number of labor hours per ha was spent for harvesting operation that is usually done by hand. In order to cope with the ever-increasing wages for peanut harvesting, an intensive effort has been made to explore the possibility of mechanization. In the early 1970's, a Lilliston 2700 digger-shaker-windrower and a Lilliston 1500 peanut harvester were introduced from abroad by the JCRR. After a series of experiments, some defects of the Lilliston machines were observed. They are: (i) the bulky machines have to be pulled and driven by a 52 HP tractor and thus are not suitable for Taiwan's small-sized farms; (ii) the head loss of 9% and the pod damage of 35% are too high; (iii) the vines dug up have to be windrowed in the field before going through mechanical processes which is difficult to do due to local atmospheric conditions; and (iv) use of the machines costs about US$200 per ha, which is higher than that of hand-picking.

Materials and Methods

It is desirable that a small-type harvester be able to pull up peanut

Fig. 1 Model CH-1 (1972) with an eccentric rotating stem comber of finger type and a pod cutting mechanism of knife disk type.

Fig. 2 Model CH-2 (1973) with a flexible stem lifter of disk type and a pod threshing mechanism of bow net type.

Fig. 3 Model CH-3 (1974) with a stem comber of pick-up type and a rotating string thresher. The single-row harvester was improved under the guidance of Dr. Pictiaw of the University of California, Davis.

Fig. 4 Model CH-4 (1976) with a four-row puller, a stem comber, a stem-transporting device, and a rotating string thresher.

Fig. 5 Model CH-6 (1978) with a stem comber of screw auger type, a rotating pod thresher of rod type, a straw walker, and a cleaning blower.

Fig. 6 Model CH-7 (1979) with a simplified stem-transporting chain and an alternately moving pod thresher of string type.

Fig. 7 Model CH-8 (1980) with an uneven stem puller of grip belt type and a pod picker of string grasp type.

stems and pick off pods in one operation. Therefore, some physico-mechanical properties of the mature peanut plants were studied. The relation between soil conditions and stem pull-up resistance was measured with a cone penetrometer and a spring-type tensiometer individually.

The components of a power tiller, such as driving tire of 6.00 × 12, diesel engine of 10 – 15 HP, and transmission and clutch mechanisms were used in the construction of an experimental peanut harvester. Universal joints and transmitting chanins used in cars and ships were also utilized. A hydraulic equipment was used to keep the height of stem-grasp position at a constant level. Part of the materials used came from an obsolete rice combine.

The harvester thus developed was tested in peanut fields. Its working capacity, percentage of pod threshing, rates of field damage and losses, and cleanliness of threshing were inspected. After a series of field experiments, modifications and improvements were made. From 1970 to 1981, the peanut harvester models CH-1, CH-2, CH-3, CH-4, CH-5, CH-6, CH-7, and CH-8 were produced. The machine is 88 cm (one-row harvester) – 120 cm (four-row combine) wide and 210 cm – 300 cm long. Models CH-1, CH-2 and CH-3 have a four-wheel-driven chassis, and CH-4 to CH-8 a track-layer-driven chassis.

Results and Discussion

Physico-Mechanical Properties of Mature Peanut Plants

Peanut varieties cultivated in Taiwan are mostly of the Spanish type with an upright stem feature. The moisture content of field soils has a great influence on the nature of peanut growing. For instance, peanuts growing in sandy soil have short upright stems with long gynophores on the pods, while those growing in moist fields, especially in clay loam soil, produce long and crawling stems with short gynophores. Fig. 8 shows this kind of differences.

The height of stems ranges from 19 to 47 cm with an average of 26 cm. The optimum position to grip the stem up is 5 to 15 cm above the ground. The relation between pull-up resistance and soil penetrating resistance of different fields is shown in Fig. 9. The relation between pull-up resistance and

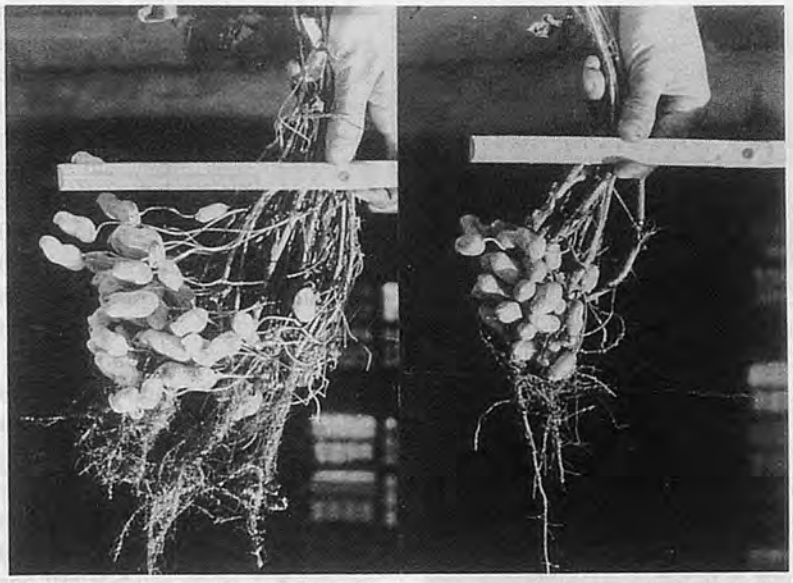

Fig. 8 Peanuts grown in sandy soil with long gynophores (left), and in wet caly soil with short gynophores (right).

the number of pods attached to each stubble is shown in **Fig. 10**. The pull-up force does not have apparent relations to the number of pods per stubble. The loss of residue pods versus the different kind of soils (represented by the soil penetrating resistance) is shown in **Fig. 11**. As peanuts are mostly grown in sandy soil or silt sandy loam, they are traditionally manually harvested by pulling up the stems. Residue losses average 3%. It is very important to harvest peanuts at the optimum time. In case of rainfall that brings about a high moisture content of soils, peanuts should be harvested earlier than usual for the sake of avoiding high residue and budding losses. Concerning the effect of pull-up directions on both pull-up resistance and residue loss, no apparent difference has been observed between vertical and diagonal directions. The resistance to pulling pods apart from their stubble is 0.5 – 2.8 kg, but a force of just 0.4 – 1.7 kg is enough if torn off at their side.

Stem Combing Equipment

To pick peanut stems from the ground up into the harvester, the stem-comber plays an important role in the whole operation. An eccentric rotating comb-finger mechanism as mounted on models CH-1 and CH-2 is illustrated in **Fig. 12**. Power is transmitted through bevel gears G_1 and G_2 to rotate the hollow shafts in reverse position, while the two fingers B_1 and B_2 which are pivoted on a fixed crank shaft inside the above hollow shaft are driven by the cones C_1 and C_2. It results in a finger expansion and contraction at its circumferential movement to comb up the stems.

As shown in **Fig. 12 (c)**, assuming that the crawled stem AC' is combed to AC after t seconds the latter by the rotating finger of Vs travelling speed, then the angle of combing θ is presented as follows:

$$\tan\theta = \frac{L}{Vs.t} = \frac{r\,(1-\cos\omega t)}{Vs.t}$$

$$= \frac{r\,(1+\sin\alpha)}{Vs.t} \qquad (1)$$

For the purpose of increasing θ, increasing r or decreasing Vs and t are effective. The time t can be expressed as equation (2).

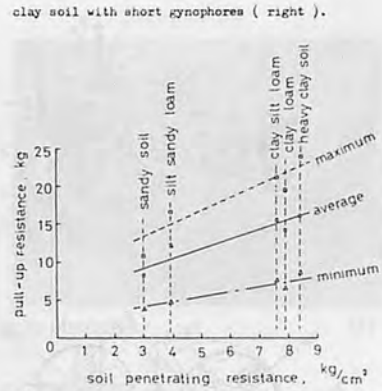

Fig. 9 Pull-up resistance of peanut stems and different soil conditions.

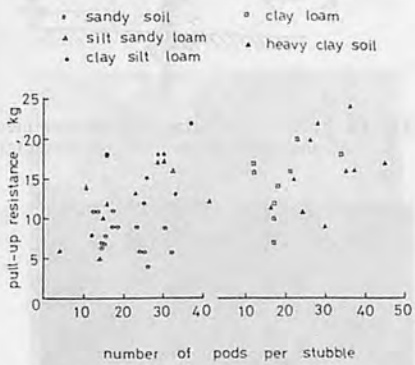

Fig.10 Pull-up resistance vs the number of pods per stubble under different soil conditions.

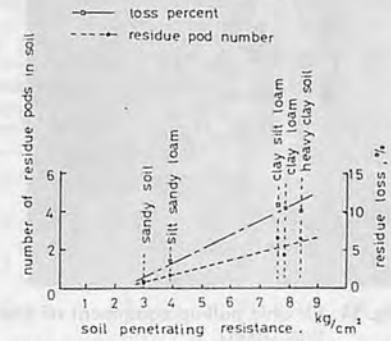

Fig. 11 Soil conditions and the loss of residue pods after the stem is pulled up.

$$t = \frac{1}{\omega}\left[\frac{\pi}{2} - \tan^{-1}\frac{\frac{R}{2} - r\cos\alpha}{b} + \tan^{-1}\frac{(r-e)\sin\alpha}{\frac{R}{2}}\right] \qquad (2)$$

Assuming that the point D is the position of the stem, then the distance of cones R, the height of cone b and the effective combing length L are expressed as follows:

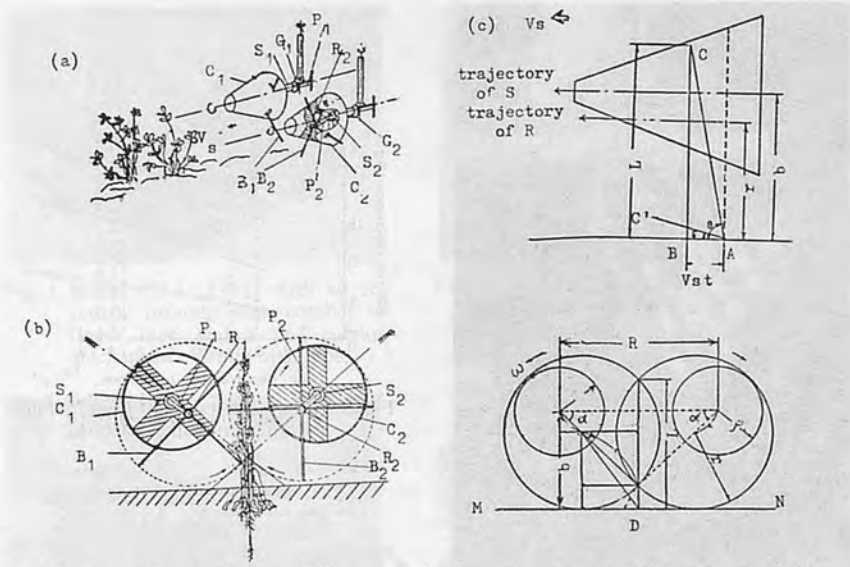

Fig. 12 Eccentric rotating comb-finger mechanism in operation (a), inside view of cones (b), and geometric representation (c).

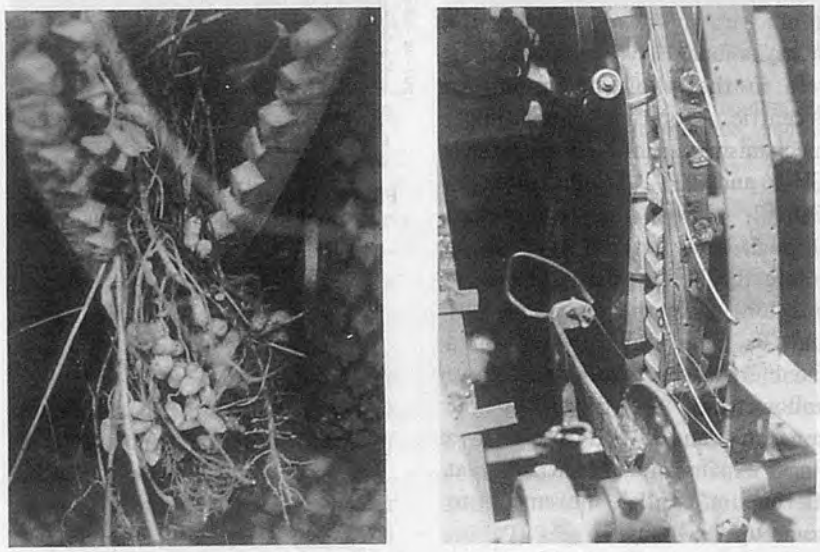

Fig. 14 Flexible pull-up equipment of disk type (left), and pod thresher of bow net type (right).

$$R = 2\,(e + r)\cos\alpha \qquad (3)$$

$$b = r + e.\sin\alpha \qquad (4)$$

$$L = r\,(1 + \sin\alpha) \qquad (5)$$

The pick-up tines of stem comber as mounted on models CH-3 to CH-8, are fundamentally an improvement from the rice combine's similar mechanism. They are connected with a moving chain, as illustrated in **Fig. 13**. The chain is moved up at Vr speed which is inclined to the ground angle of θ, while the whole body travels forward at Vs speed. The stem is expected to be combed from the original angle β to the terminal angle δ in the time of t. The equation is expressed as follows:

$$\tan\delta = \frac{Vr\,(e+h.\cot\beta)\sin\theta + h.Vs}{Vr\,(e+h.\cot\beta)\cos\theta - e.Vs} = \frac{K\,(e+h.\cot\beta)\sin\theta + h}{K\,(e+h.\cot\beta)\cos\theta - e} \qquad (6)$$

$$\text{but } K = \frac{Vr}{Vs} = \frac{(h + e.\tan\delta)\cos\delta}{(e+h.\cot\beta)\sin(\delta-\theta)}$$

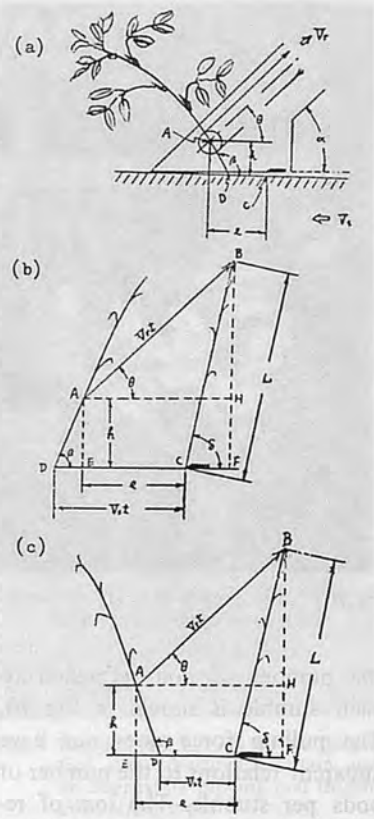

Fig. 13 Geometric representation of the motion of pick-up tines (a), motion analyses of face combing (b), and back combing (c).

The effective length of stems is expressed

$$L = \sqrt{[K\,(e+h.\cot\beta)\sin\theta + h]^2 + [K\,(e+h.\cot\beta)\cos\theta - e]^2} = \frac{e.\tan\theta + h}{\sin\delta - \cos\delta\,.\tan\theta} \qquad (7)$$

To insert the experimental harvester's data Vr = 12 cm/s, Vs = 14 cm/s, e = 10 cm, h = 5 cm, θ = 39°, δ = 129° into equations (6) and (7) may obtain β = 132.5° and L = 48.5 cm, which are the optimum operating conditions for peanut stems. It is obvious that for the purpose of decreasing the influence of β on δ, increasing θ as well as Vr is necessary.

Pull-up and Pod Threshing Equipment

Peanut stems are rapidly grasped by a pull-up device and transported to its rear portion to receive pod-threshing. As shown in **Fig. 14**, a

pair of flexible disks with saw-tooth-shape rubber bands fixed circumferentially on each side are used to grip the stems. The upper portion of the disk is a pod-thresher of the bow net type, which is constructed with a steel wire and fixed on a revolving arm. The threshing performance is satisfactory, but the pods picked are difficult to collect.

Combining pick-up tines and inclined moving tooth-chains with a sliding bar between the chain and the C-shape clamp may create another pull-up device as shown in **Fig. 15**. As stones are easy to get into the clearances of the chain and thus cause some trouble, an uneven grip belt of pull-up equipment has been designed as shown in **Fig. 7**. These kinds of pull-up equipment work in such a way that resembles pinching instead of holding a fish. They firmly grasp the stem and keep it on the chain of belt to accept pod-picking operations.

As to the pod-picking mechanisms, a knife disk cutter (as mounted in the CH-1 harvester) and a bow net thresher (as mounted in CH-3, CH-4, and CH-5) are shown in **Fig. 16**. CH-6 and CH-8 are each equipped with a pod picker of the double-string drum type. CH-7 is fixed with a picker of the alternately moving string type. However, all these threshers have the same kind of mechanism that cuts the pods off from the gynophores without any damage to the pods.

The experimental result of stem combing and pull-up equipments is shown in **Table 1** and the performance of pod-threshing equipment in **Table 2**.

Through the automatic pick-up height hydraulic control system as shown in **Fig. 17**, the total pull-up ratio could be positively improved. A mechanically operated directional valve is connected with the end of pull-up chassis which is supported at the other end with pivoted

Fig. 15 Pull-up equipment of tooth-chain type in operation.

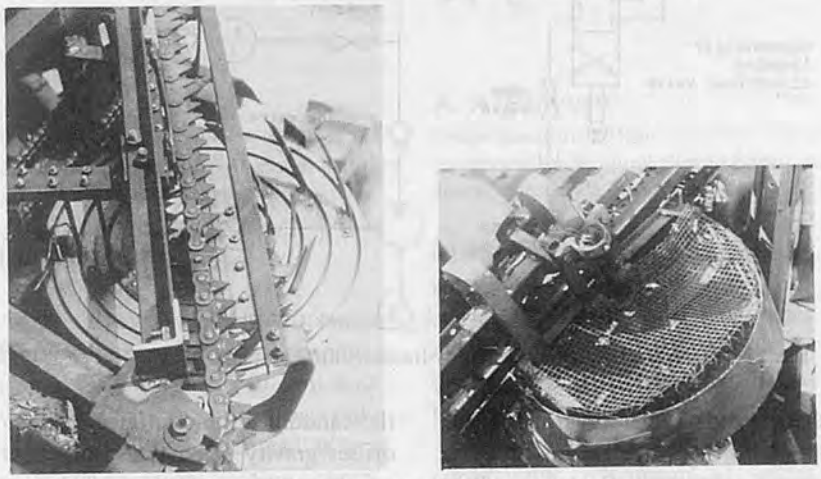

Fig. 16 A knife disk thresher (left) and a bow net thresher (right).

Table 1 Test Results of Peanut Stem-combing and Pull-up Equipment

Equipment		Field condition		Operation		
Comber	Puller	Moisture content %	Penerating resistance kg/cm²	Total lift %	Abnormal lift %	Loss %
Eccentric finger	tooth-chain	12.8	3.0	77	26	17
Eccentric finger	flexible disk	9.1	3.9	77	13	24
Pick-up tine	tooth-chain	7.8	4.2	82	18	18
Pick-up tine	tooth-chain	14.3	5.5	57	37	46
Improved pick-up tine	uneven belt	10.8	3.9	85	13	14
Improved pick-up tine	improved uneven belt	9.5	2.8	91	6	3

Table 2 Performance of Pod Threshers

Type of thresher	Perfect pods %	Damaged pods %	Non-threshed pods %
Knife disk thresher	74	10.0	16.0
Bow net thresher	89	4.7	6.3
Alternately moving thresher	73	10.0	27.0
Rotating string thresher	67	14.9	18.1
Improved string thresher	75	4.0	21.0
Improved double-string drum thresher	83	4.0	13.0

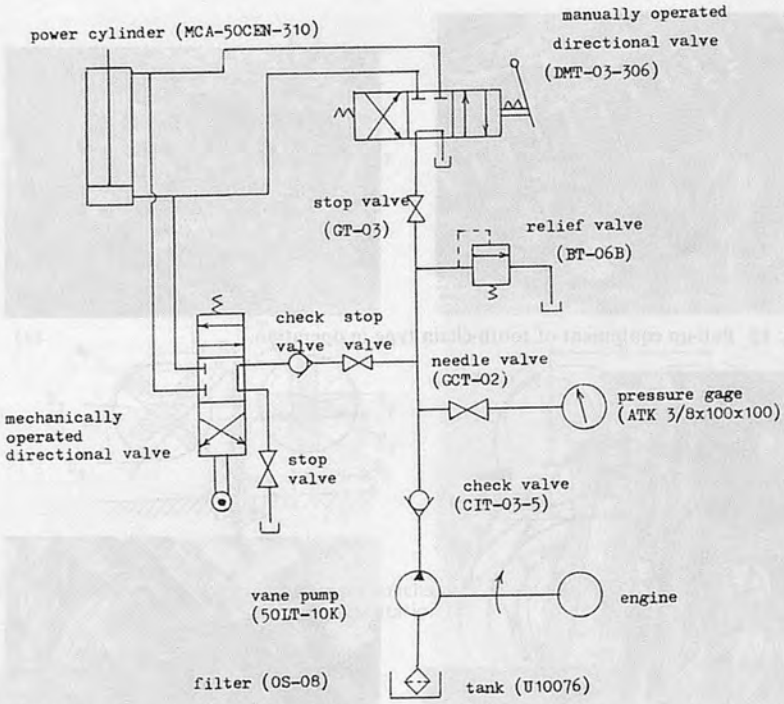

Fig. 17 An automatic pick-up height hydraulic control system.

shafts and radial bearings. The spool of the valve is sensed by a ground-contacting float or roller, and there is a tendency to contact the random ground surface by the off-set gravity of chassis. Thus, the spool is able to run up and down automatically.

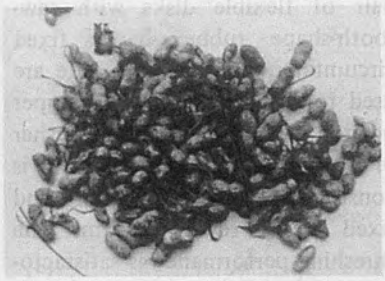

Fig. 18 Peanut pods threshed by a bow net picker.

REFERENCES

1. Burmistrova, M.F. and others, 1963. Physicomechanical Properties of Agricultural Crops. pp. 88-96.
2. Duke, G.B., 1960. Mechanized Harvesting of Virginia Peanut Crop. Trans. ASAE, pp. 138-139.
3. Hwang, Y.R. and H.D. Jiang, 1981. A Study on the Labor-hour Requirement of Main Crops in Taiwan, Dept. Agri. Education, National Chung Hsing University.
4. Shimamoto, R.J. 1969. Development of Small Type Binder. Jour. Soci. Agri. Machinery, 31-1-2.

Tillage and Irrigation on Water Use by by Wheat in Grey Terrace Soil of Bangladesh

by
Z. Karim
Principal Scientific Officer
Bangladesh Agricultural Research Institute
Joydebpur, Dacca, Bangladesh

A. J. M. S. Karim
Senior Scientific Officer
Bangladesh Agricultural Research Institute
Joydebpur, Dacca, Bangladesh

A. A. Pahlwan
Senior Scientific Officer
Bangladesh Agricultural Research Institute
Joydebpur, Dacca, Bangladesh

Abstract

The effect of three tillage treatments, minimum, conventional and deep tillage were compared relative to yield of wheat, water use efficiency and cost of production on a Grey Terrace Soil of Bangladesh under rainfed and irrigated conditions. In the irrigated area a maximum yield of 3.33 t/ha was produced from conventional tillage, but in the rainfed area, trial maximum yield of 2.25 t/ha, a 36% increase in yield over the conventional tillage was obtained from deep tillage. Cost of production of 100 kg grain was much higher, $7.5, in the rainfed conventional tillage compared to $4.5 in deep tillage with maximum water use efficiency of 294.6 kg/ha/cm. The higher wheat yield resulting from deep tillage sufficient to break the plowpan in the rainfed experiment was likely due to improved adaptation of the plant to utilize residual soil moisture through a large number of roots distributed in the deep layers of soil profile.

Acknowledgements: Financial assistance provided by Bangladesh Agricultural Research Council is hereby acknowledged. We thank Dr. M.D. Dawson, IADS, Project Superviser for constructive criticism on the draft manuscript.

Introduction

Lack of available irrigation water limits winter crops (Rabi) production in Bangladesh. At present even with large Government efforts only 12% of the cultivated land is irrigated which means rainfed agriculture will remain the most important base for increased food production. Expansion of wheat cultivation largely depends on the efficient utilization of soil residual moisture. Considerable potential moisture is available in the subsurface layers of many Bangladesh soils (Karim *et al*, 1980, Rahman *et al*, 1982) which remains to be utilized by the wheat plant. However, the presence of dense compact subsurface layer or an induced plowpan precludes deep rooting. The plowpan is variously developed in most cultivated soils although it is particularly prominent in soils which are deliberately puddled for transplanted rice cultivation. Moreover, the plowpan appears to be most strongly developed and impermeable on medium fine to fine textured soils.

The compact plowpan impedes root penetration, especially when the soil moisture status is below field capacity. Roots tend to be diverted sideways over the surface of the pan instead of penetrating into the subsoil, thus reducing the volume of soil from which the root can extract moisture. In such cases moisture stress develops quickly in the absence of rainfall or irrigation (Brammer, 1980).

To explore the possibilities of considerable expansion of wheat cultivation using residual soil moisture in areas where irrigation water is scarce, deep plowing by breaking the pan was compared with other tillage practices. A study was initiated to compare three contrasting tillage practices on a Grey Terrace rice soil having well developed plowpan with respect to infiltration, root growth and use of residual soil profile moisture.

Materials and Methods

Two experiments, irrigated and rainfed with identical treatments, were conducted on a Grey Terrace Soil at the Central Station of Bangladesh Agricultural Research Institute, Joydebpur, Dacca. This soil has a well developed plowpan formed about 8 cm depth of the profile due to conventional puddling for transplanted paddy cultivation (**Fig. 1**). The pan has a compacted 3 cm thick dense platy layer with bulk density 1.8 g/cm^3.

Fig. 1 Soil Profile Showing Occurrence of Plowpan

Table 1 Characteristics of the Experimental Soil

Depth (cm)	Description	Soil separates (%)			Bulk density (g/cm^3)
		Sand	Silt	Clay	
0-8	Reddish yellow (5 YR 6/6) friable moist, nonsticky, nonplastic abundance of roots, large number of reddish brown mottles	15.4	52.8	31.8	1.3
8-13	Yellowish red (5 YR 4/4), Clay, Compacted hard dense layer, platy structure, Large number of reddish brown mottles but smaller in sizes no root present.	9.2	50.0	40.8	1.8
13-20	Grey (5 Y 5/1), Weak medium and five angular blocky friable moist, occasional black nodules, no root present.	11.2	50.0	38.8	1.6

Roots of the previous rice crop were abundant above the pan accompanied with a large number of reddish brown mottles, mostly around the root channels. The characteristics of the soil are given in **Table 1**.

After harvest of the transplanted "aman" paddy, wheat was planted on variously tilled sites. A random complete block design with three replications was used. The three tillage treatments planted to wheat were defined as:

1. Minimum tillage – Seeds were sown without land preparation below 3 cm depth with a dibbler (T_0).

2. Conventional tillage – The land was plowed five times followed by laddering after the harvest of transplanted paddy and, the depth of the plowed layer was between 8 and 10 cm (T_1).

3. Deep tillage – The pan within 8 cm depth of the profile was broken with a tractor drawn chisel plow. The depth of the plowed layer was 30 cm (T_2).

Two irrigations, one with 9.5 cm water at 21 days and another with 6.4 cm at 41 days after emergence of seedlings, were applied to the irrigated plots on the basis of calculated ET using the modified Penman Equation. The rainfed trial received no irrigation water. Soil moisture flux and soil water depletion were measured gravimetrically taking soil samples in increments from 0-80 cm depth of the profile at various intervals of time. Water infiltration was estimated using a double ring infiltrometers.

Soil samples for root measurement were collected at the wheat grain filling stage after selecting a point mid-way between plants where an aluminium tubing of 5 cm in diameter was driven into the soil in 10 cm increments to 80 cm. The roots were separated from the soil in a stream of water on a 0.2 cm screen. Samples were stored in polythelene bags in a refrigerator until roots were counted.

Results and Discussion

Tillage on Infiltration and Soil Moisture Flux

The rate of water infiltration through the soil profile was rapid for the deep tillage treatment (**Fig. 2**). Initially the infiltration rate was 1.16 mm/min which was decreased linearly to 0.66 mm/min in 120 min and thereafter decreased at a constant rate to 0.06 mm/h. Initial infiltration rate during the first two hours differed between the minimum tillage and conventional tillage treatments.

The initial faster infiltration was noted in the minimum tillage treatments then it decreased and after 2 h became similar for both tillage treatments.

Breaking of dense impervious pan by deep tillage apparently facilitated the saturated flow as water drained relatively unimpeded down the profile. The minimum tilled plots were observed to have cracks from soil surface through the plowpan and the initial higher infitration rates were probably due to intake of water through the cracks. Recorded soil moisture flux to a depth of 100 cm in the variously tilled plots is shown in **Fig. 3**. It was apparent that the subsoil moisture to 100 cm within time was highest in the deep tilled plots

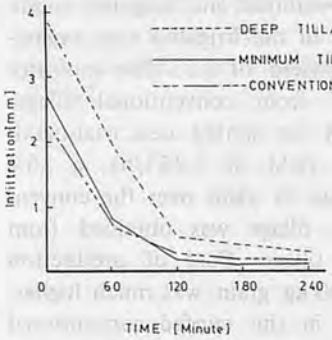

Fig. 2 Effect of Different Tillage Practices on the Infiltration of Water

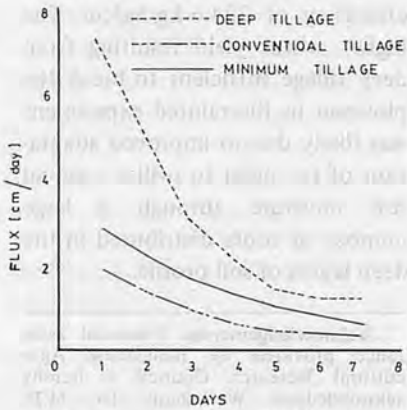

Fig. 3 Soil Water Fluxes as a Function of Time and Tillage Practices

and appreciably higher in the minimum tillage then in the traditional tillage treatments. Lal (1976) has recorded higher infiltration rates and higher conductivity in no tillage plots than those of the conventionally plowed plots.

Water Use by Wheat Plant

The cumulative soil moisture depletion by wheat grown on the various tilled soils under rainfed and irrigated conditions is shown in Figs. 4 and 5, respectively. Water use increased at almost a constant rate from tillering to maturity.

That deep tillage enabled wheat to be grown under rainfed conditions to utilize considerably more soil profile residual moisture is the most significant finding. The higher rainfed wheat yield recorded from the deep tilled plots was associated with greater cumulative utilization of soil profile moisture, a fact supported by the observed root density patterns (Table 2).

It is interesting to note that the highest water use efficiency of 294.6 kg/ha/cm of water was recorded for the rainfed wheat planted on the deep tilled plots which was almost double the efficiency of irrigated wheat.

The differential distribution of roots into the soil profile (Table 2) as affected by contrasting tillage practices likely explain the difference in water use by the wheat plant. In conventional tillage the wheat roots were mostly restricted within 20 cm depth of the profile whereas in deep tillage the maximum number of roots as distributed below 20 cm. Indeed many roots extended down to 80 cm depth following deep tillage. The breaking of pan by deep tillage has provided a larger soil volume available to the roots. Even under minimum tillage, roots followed the large number of cracks through the pan into the subsoil. A dense impervious layer (plowpan) occurred between 8 cm and 11 cm depth of the profile and restricted the growth of wheat roots under traditional tillage.

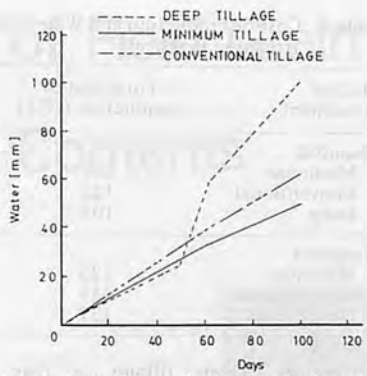

Fig. 4 Soil Water Depletion during the Wheat Growing Season as Affected by Tillage Practices in Rainfed Farming

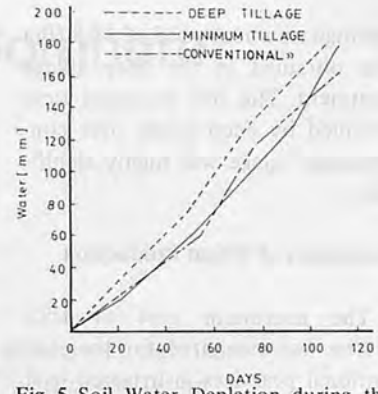

Fig. 5 Soil Water Depletion during the Wheat Growing Season as Affected by Tillage Practices in Irrigated System

Table 2 Effect of Tillage Practices on Root Growth

Soil depth (cm)	Root Density at Grainfilling Stage cm/cm³ of Soil		
	Minimum	Conventional	Deep
0-10	1.10	1.98	0.01
10-20	1.24	2.39	1.54
20-30	1.68	1.02	2.74
30-40	0.52	0.42	1.21
40-50	0.37	0.12	0.86
50-60	0.23	0.08	0.56
60-70	0.18	0.02	0.31
70-80	0.09	0.01	0.29

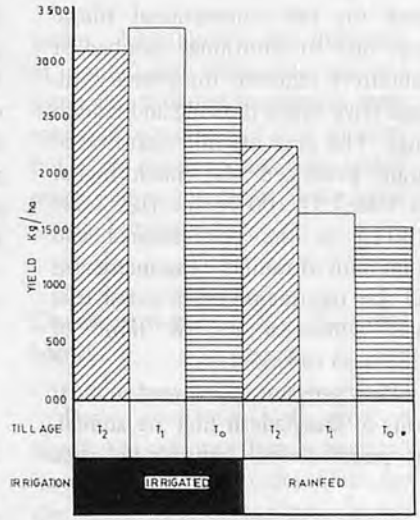

Fig. 6 Influence of Tillage Practices and Irrigation on the Yield of Wheat

Tillage Treatment and Wheat Yield

The highest wheat grain yield of 3.33 t/ha was produced under irrigation on the conventional treatment closely followed by wheat planted on deep tillage plots (Fig. 6). The difference in yield was not statistically significant (Table 3). However, under rainfed conditions

Table 3 Effect of Tillage and Irrigation on Yield and Yield Contributing Parameters of Wheat

Tillage treatment	Yield kg /ha	Heads/m²	Grain/spikelet	Population/m²	1000 Seed Wt. (gm)	Length of spikelet (cm)	Plant height (cm)
Rainfed							
Minimum	1 502.4	156.67	32.87	119.33	42.13	7.73	64.3
Conventional	1 650.0	165.33	35.87	110.00	39.17	7.77	68.5
Deep	2 250.0	189.00	39.13	117.00	38.87	8.07	66.1
Irrigated							
Minimum	2 660.9	194.00	36.38	93.00	42.3	7.77	71.73
Conventional	3 331.1	289.67	37.17	134.67	43.8	7.67	25.87
Deep	3 141.5	228.67	35.17	154.33	38.4	7.4	71.93

the highest wheat yield of 2.25 t/ha was obtained in the deep tillage treatment. The 36% increased yield obtained by deep tillage over conventional tillage was highly significant.

Economics of Wheat Production

The maximum cost of US$ 159/ha was estimated for the conventional practices in irrigated trial and minimum cost was US$ 103/ha in the deep tillage of rainfed experiment (Table 4). The increase in cost for the conventional tillage was due to additional number of labourers required for primary tillage (five times plowing and laddering). The cost of unit quantity of grain produced was much higher at US$ 7.52/100 kg and US$ 7.14/100 kg in the conventional and minimum of rainfed experiment and all the treatments of irrigated trial was within a narrow limit of US$ 4.33 to US$ 4.76.

Plowpans are widespread in most soils of Bangladesh that are annually puddled for transplanted rice cultivation. Deep tillage in this soil could be useful in producing crops like wheat under rainfed conditions. Where irrigation water is available, wheat cultivation with conventional tillage may be satisfactory. Since at present only 12% of the cultivated areas is irrigated deep tillage sufficient to break the plowpan could provide an important means of increasing crop production in widely distributed rainfed areas where such pans constrain root growth.

Table 4 Cost of Production and Water Use Efficiency as Affected by Tillage and Irrigation Practices

Tillage treatment	Total cost of production (US$)	Cost of production 100 kg grain (US$)	Water use efficiency kg/ha/cm
Rainfed			
Minimum	107	7.14	204.5
Conventional	125	7.52	261.9
Deep	103	4.57	294.6
Irrigated			
Minimum	125	4.67	169.8
Conventional	159	4.76	200.7
Deep	137	4.33	143.1

REFERENCES

1. Brammer, H. (1980) Ploughpans and tillage problems in Bangladesh Soils. BARC, Publication No.5.
2. Karim, Z., Rahman, M. and Khan, M.S. (1980) Effect of residual soil moisture on the germination of wheat seeds. Bangladesh Sci. Conf. 56.
3. Lal, R. (1976), No-tillage effects on soil properties under different crops in western Nigeria Proc. Soil Sci. Soc. Amer. 40, 762-768.
4. Rahman, S.M., Basak, B.C. and Habibullah, A.K.M. (1982) Measurement of hydraulic properties of Brown Flood plain Soils of Bangladesh AMA. XIII No.1 Winter, 48-50. ■■

A Model of Field Grain Sorghum Moisture Contents

by
Surya Nath
Senior Research Officer
Agricultural Engineering Department
Indian Institute of Technology
Kharagpur, India

William H. Johnson
Professor and Director
Engineering Experiment Station
Kansas State University
Manhattan, Kansas 66506, U.S.A.

Abstract

The duration and quality of the combine-harvest method is affected by prevailing grain moisture conditions, trafficability, combine settings, and other general crop conditions.

This study establishes a mathematical relationship between grain moisture and time for estimating field grain moistures of grain sorghum during the harvest season. The model predicts grain moisture from a known reference moisture with or without the influence of rainfall. It can predict the number of days required for grain moisture to reduce from one level to any other. The model is somewhat specific for location, but can be easily adapted knowing localized drying rates.

Introduction

Grain is said to have reached physiological maturity when it has reached its maximum dry weight. After physiological maturity, the number of days the crop stands in the field and the prevailing weather during those days determines the moisture content level. If there are no major changes in the air mass surrounding the crop, grain dries continuously to equilibrium in a rather predictable fashion. But, if there are major changes in weather, certain weather parameters might be used to better characterize the rate of moisture loss. It was reasoned, however, that many of the weather effects can be lumped into a generalized, overall rainfall effect.

Objective

The objective of this portion of the study was to develop a field grain moisture model, related in some way to critical weather factors, which would give a basis for estimating grain moisture contents throughout the harvesting period.

Procedures

Field grain moistures were sampled daily from September 9 to October 31, 1976, along with precipitation on corresponding days. Grain moisture was sampled every day at about 10 a.m., whereas rainfall was measured on a 24 h basis. It was observed that the effect of rainfall seemed to be a most significant cause of a step-wise moisture increase.

From these data, a model was developed which predicts grain moisture from a known reference moisture assuming that there was no rainfall during the harvest season. Additionally, the influence of rainfall was taken into account using an estimated increase in grain moisture content per mm of rainfall. The models were then tested using data available from two Kansas locations.

Development of the Rainless Model

Daily moisture loss after a significant rain was first emphasized in developing the model. Data for the 1976 field-drying grain moisture separated by three heavy rains, used to fit an exponential model, were considered as three sets. Moisture content as a function of time was described by an exponential decay model as follows:

$$M = A + Be(-C_1T_1 - C_2T_2 - C_3T_3) \quad \ldots\ldots\ldots\ldots (1)$$

where M = moisture content (% wb), A and B are constants in terms of moisture, C_1, C_2, C_3 are drying rates (% moisture loss per day) in the three sets, and T_1, T_2, T_3 are days after the three heavy rains. The model obtained was

$$M = 11.13 + 19.93\,e(-0.19\,T_1 - 0.187\,T_2 - 0.191\,T_3) \quad \ldots\ldots\ldots\ldots (2)$$

C_1, C_2, C_3 were not different from any reasonable significance level (**Table 1**), so all three drying rates could be described by the same model.

Table 1 Parametric Values of Grain Moisture Model Considering Three Drying Rates

Parameter	Estimate	Asymptotic Std. Error	Asymptotic 95% Confidence Interval	
			Lower	Upper
A	11.13	0.50	10.10	12.17
B	19.93	0.64	18.61	21.25
C_1	0.191	0.0157	0.159	0.223
C_2	0.187	0.0144	0.157	0.217
C_3	0.191	0.0171	0.156	0.226

Table 2 Parametric Values of Grain Moisture Model Considering Only One Drying Rate

Parameter	Estimate	Asymptotic Std. Error	Asymptotic 95% Confidence Interval	
			Lower	Upper
A	11.09	0.459	10.15	12.03
B	19.96	0.566	18.80	21.12
C	0.189	0.0135	0.161	0.216

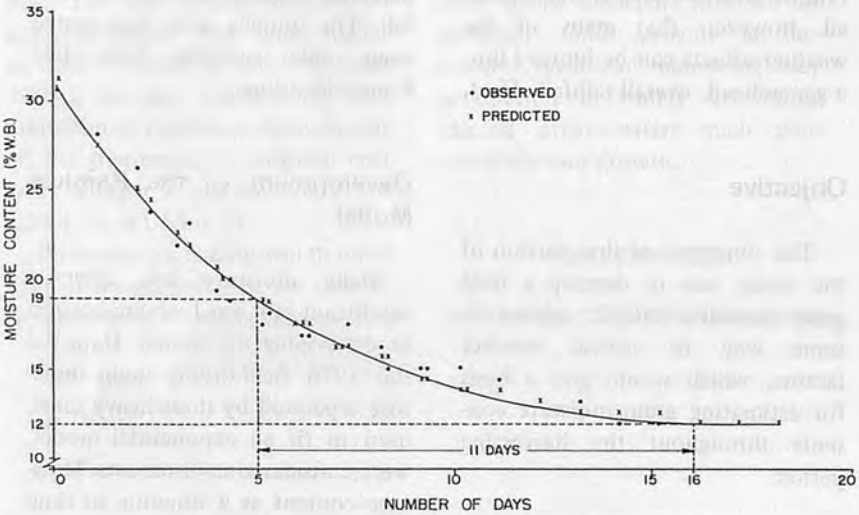

Fig. 1 Rainless grain moisture model for grain sorghum as a function of time.

The resulting model for the rainless grain moisture content was

$$M = 11.09 + 19.96\, e^{-0.188T} \quad \ldots\ldots (3)$$

This accounted for almost 99% of the variability in grain moisture content. Slight variations in weather, such as small rains or dew, did not cause significant changes in the nature of drying and after a heavy rain, the decay curve followed the same exponential trend from a new moisture content. See **Fig. 1** for a comparison of predicted and observed grain moisture contents.

Verification of Rainless Field-Grain Moisture Model

The field-grain moisture model (3) was verified using other field moisture data taken in 1972 and 1973 (Donnelly et al., 1977) at Manhattan and Ottawa, Kansas. For the data, Julian days were converted to calendar days in order to make comparisons compatible. One particular day, when moisture was about 30%, was fixed as the reference day. The number of lapsed days was then considered from that reference day onward, and field moisture contents were predicted. The values using the least-square-fit method are plotted in **Figs. 2** and **3**.

In 1972, the predicted field grain moistures were reasonably good compared to data from observations at Manhattan and Ottawa. In 1973, at Manhattan and Ottawa, there were considerable variations between the actual observed grain moistures and predicted grain moistures.

In 1972, the observed mean value of grain moisture in Manhattan was 17.89% compared to a predicted value of 18.05, and in Ottawa the observed mean value was 18.71 compared to a predicted value of 16.08. Thus, a variation was 0.9 and 14% for Manhattan and Ottawa, respectively—not high considering that the climatological situations in 1972 and 1976 were not identical and substantial variation was expected. In 1973, this variation was 24.8% for Manhattan and 23.4% for Ottawa.

In 1973, the total rainfall during September and October was 41.60 cm in Manhattan, compared to only 20.32 cm in 1972 for the same period.

Similarly, in Ottawa the total rainfall in 1973 was 41.0 cm compared to 19.15 cm. Thus, the high rainfall in 1973 caused significant increases in the observed grain moisture whereas the predicted moisture was low for the same period because the effect of rainfall was omitted.

Influence of Rainfall on the Rainless Grain-Moisture Model

Rainfall causes grain moisture variations in the field. A heavy rain is likely to cause a high moisture increase, but a very small rain, for a very short duration, may have a negligible effect; therefore, an attempt was made to establish a moisture percentage increase per mm of rainfall. This admittedly is

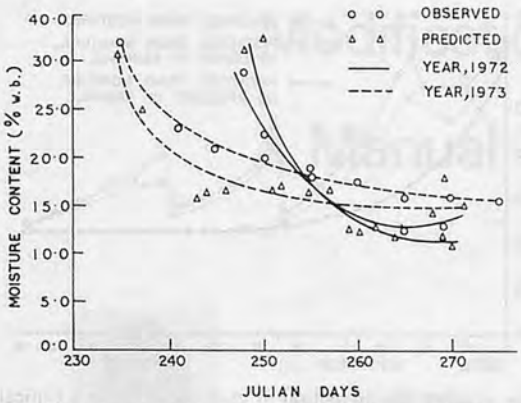

Fig. 2 Observed and predicted field grain moistures (rainless model) in Manhattan, Kansas.

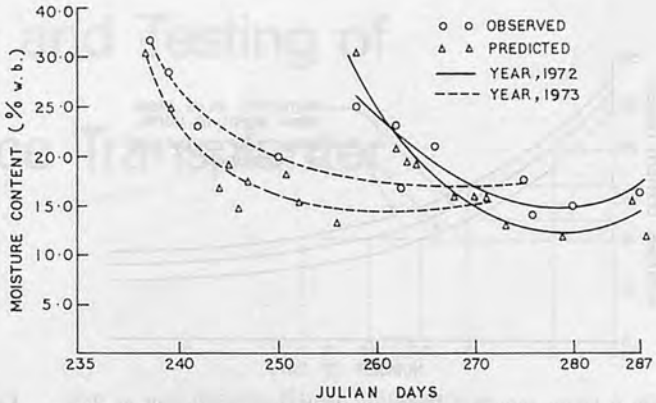

Fig. 3 Observed and predicted field grain moistures (rainless model) in Ottawa, Kansas.

a simplified approach because the antecedent grain moisture content and rain intensity-duration must influence the grain moisture increase for a given rain.

For September of the 1976 harvest year the moisture increase per 2.5 mm of rain was estimated to be 0.37%, whereas in the latter part of October the increase seemed to be much higher. Cromer et al, (1929) found that 12.7 mm of rainfall increased the wheat moisture content by 8.3%. Few additional data were available; therefore, the moisture increase per mm of rainfall could not be well established. It was thought, however, that the moisture increase per mm of rainfall would be more significant as the prevailing ambient temperatures decreased.

Assuming 1 and 1.5% grain moisture for 2.5 mm of rain for September and October, respectively, the levels of predicted moisture were revised using the 1976 data. Based on these data, it was also assumed that grain moisture would not increase beyond 35% because of a heavy rain. A graphical comparison of these predicted grain moistures considering rainfall influence is given in **Figs. 4** and **5** for the two locations in 1972 and 1973. The predicted grain moistures in 1972 and 1973 for both locations showed significant influence from heavy rains, but the general trend of the predicted moisture curve is the same as that of the observed ones.

Importance of the Grain-Moisture Model

The moisture model can be useful to managers and farmers estimating a level of moisture in the field. During a harvest season, the variation of grain moisture and changes in environmental conditions are significant in determining the timeliness of the harvesting operations and the extent of grain losses. A delayed harvest may result in a decreased grain yield because of the increasing probability of adverse weather conditions. Dry and warm days enable the crop to dry normally and permit the farmer to conduct the harvesting operation in a short time with low losses. Thus, being able to predict field grain moistures allows the farmer to decide when to harvest. Similarly, the storage problem can be lessened if the farmer knows anticipated harvest moisture contents. Alternate plans can be made during harvest if im-

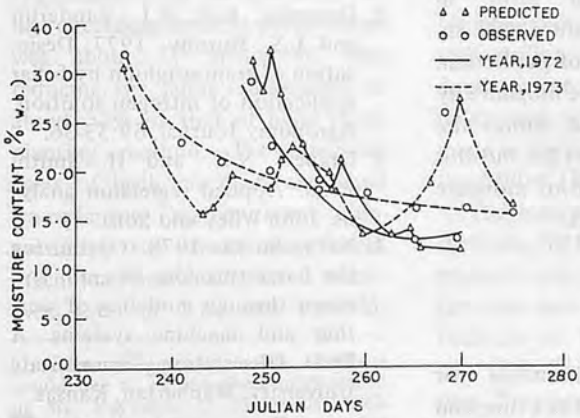

Fig. 4 Observed and predicted field grain moistures (including influence of rainfall) in Manhattan, Kansas.

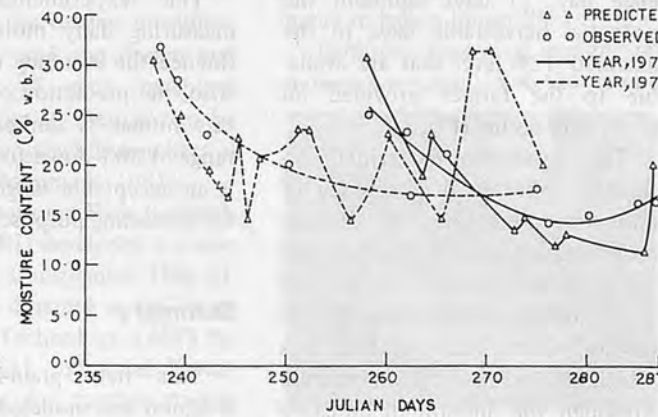

Fig. 5 Observed and predicted field grain moistures (including influence of rainfall) in Ottawa, Kansas.

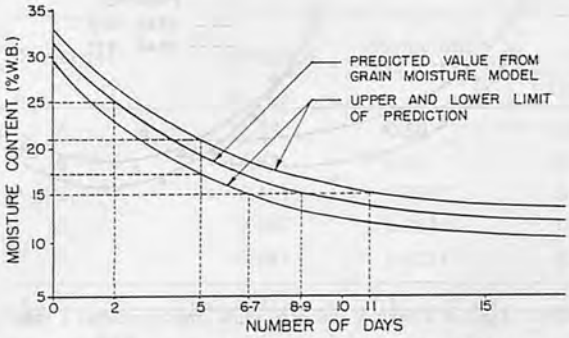

Fig. 6 Grain moisture levels for individual prediction at 95% confidence interval.

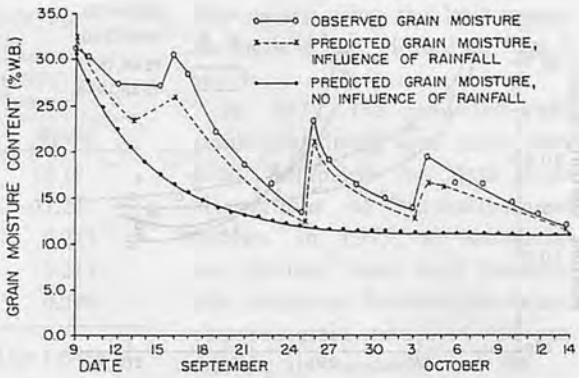

Fig. 7 An example for prediction of grain moisture in a typical year.

mediate drying facilities are not available.

A farmer can better estimate the number of days required to attain a certain grain moisture content in the field from some reference moisture content. For example, if on a certain day the moisture is 25%, 15% moisture is expected after approximately 6.5 days without rain, with the range being from 4.7 to 9 days (**Fig. 6**). Similarly, if the crop is allowed to dry in the field for three additional days, the moisture will drop an additional 4 to 8% (**Fig. 6**).

Further, considering 12% moisture content as the prevailing equilibrium field grain moisture and assuming the farmer will complete harvest by the time the grain reaches 12% moisture, the number of harvestable days can be estimated from the model. For example, if the moisture is 19% on the reference day, 11 days represent the potential harvestable days to the assumed 12% level that are available to the farmer provided no heavy rain occurs (**Fig. 1**).

The correction for rainfall influence increases the accuracy of moisture prediction. A definite moisture percentage increase caused by every mm rainfall can be used as an additional adjustment to the rainless model. Such an influence is illustrated in **Fig. 7** for one season. Although the amount of moisture increases is not definitely known, and may vary by location or year, use of 1.0% moisture increase for 2.5 mm rain in September and 1.5% moisture increase in October can improve the rainless grain moisture estimate. The method shows a technique for predicting grain moisture.

Limitations of the Grain Moisture Model

The moisture model is clearly of an exponential decay type (the derivative of an exponential function is also an exponential). The limitations of the models may be expressed in terms of accuracy. The model is likely to yield some error from one region to another and one year to another if there are drastic variations in weather, but weather parameters can explain a large proportion of the grain drying rate.

The experimental error in measuring daily moisture will influence the accuracy of prediction. Also, the prediction of moisture by this model is limited within the range of 30% down to 12%, but this is an acceptable range of moisture for harvesting purposes.

Summary

This field grain-moisture for sorghum was modeled as a function of time. During the harvest period, the model predicts the level of grain moisture from a known reference moisture. A rain-free model predicts the number of days required for grain moisture to reduce from a particular level to any other level, provided there is no major change in weather. The influence of rainfall on moisture increase was then taken into consideration using an assumed amount of moisture increase per mm rainfall in September and October. This consideration improved the accuracy of the model. Use of the model has been shown, taking one season as an example.

REFERENCES

1. Cromer, C.O., J.S. Cobb and H.B. Josephson. 1929. Effect of weather conditions on the moisture content of standing grain. Agricultural Engineering. 10(2): 54.
2. Donnelly, K.J., R.L. Vanderlip and L.S. Murphy. 1977. Desiccation of grain sorghum by foliar application of nitrogen solution. Agronomy Journal, 69:33-36.
3. Draper, N.R. and H. Smith. 1966. Applied regression analysis. John Wiley and Sons.
4. Nath, Surya. 1978. Optimizing the harvesting loss of grain sorghum through modeling of weather and machine systems. A Ph.D. Dissertation, Kansas State University, Manhattan, Kansas.

Modification and Testing of a Manual Rice Transplanter

by
Gajendra Singh
Agricultural and Food Engineering Division
Asian Institute of Technology
Bangkok, Thailand

Uqaili Khalid Hussain
Agricultural and Food Engineering Division
Asian Institute of Technology
Bangkok, Thailand

Abstract

Modifications were incorporated in the IRRI's 5-row manual transplanter, which made it possible to use conventionally raised seedlings instead of the cumbersome 'mat type' seedlings. Changes in design were made after the trial runs to reduce the operational and mechanical problems. The modified transplanter has a better performance with 29 day-old seedlings and 3-point pickers, tested on heavy clay soil (with 12-15 days sedimentation period after the last puddling), and 4-6 cm water depth. The effective field capacity of the modified transplanter was 0.014 ha/h. The average pull required by the machine in a levelled field with 5-7 cm water depth was 8 kg. The labor requirements for transplanting one ha (excluding seedling preparation) was about 71 man-hours, thus reducing the labor requirement to about 55% of that of hand transplanting method. The operating costs of both machines and hand transplanting system were computed. At the present wage levels, machine transplanting has a break-even level at 2 ha and 1 ha for single and double cropping per year, respectively.

Acknowledgement: The authors would like to express their appreciation to Mr. Raymond C Fisher of IRRI-THAI Industrial Extension Program for his assistance in the fabrication of the modified transplanter.

Introduction

Several countries have shown growing interest in the design, development and adaptation of suitable rice transplanters which can ensure timely planting, uniformity in spacing and depth and at the same time facilitate intercultivation. So far these efforts have not materialized in an encouraging way. Only a handful of Asian countries like Japan, Korea and Taiwan have shown progress in solving the problem. Emphasizing the same reasons, a UNDP fact finding mission stressed recently "Farmers (in Asia and Pacific) at present are unable to buy suitable transplanters, harvesting machines, seed drills – and the design and development of such machines must start now if they are to be made in any worthwhile numbers in the 1990s" (Boonmark, 1981).

The International Rice Research Institute (IRRI) developed a 5-row manual rice transplanter (Fig. 1). One unit was donated to the Asian Institute of Technology (AIT) by the IRRI-THAI Industrial Extension Program for further studies and developmental work.

The transplanter consists of a wooden skid, a main frame assembly that supports the seedling tray, feeding assembly, and tray indexing assembly, plus a pivoted picker bar assembly and the handle assembly (Fig. 2). The machine is manually operated and is pulled through the field by an operator.

Seedling Preparation

A modified mat-type seedling raising method was tried at AIT based on IRRI's recommendations (Uqaili, 1981). The 'double frame' method was found expensive and modifications were incorporated in the 'single frame' method to obtain satisfactory seedling mats. Frames of galvanized iron sheet (Gauge No. 16) were fabricated (Fig. 3) which incurred $1.00 against $1.50 of the wooden frames and is anticipated to have a longer life.

Different shapes of seedling removers were tried, but the combi-

Fig. 1 IRRI's original manual rice transplanter.

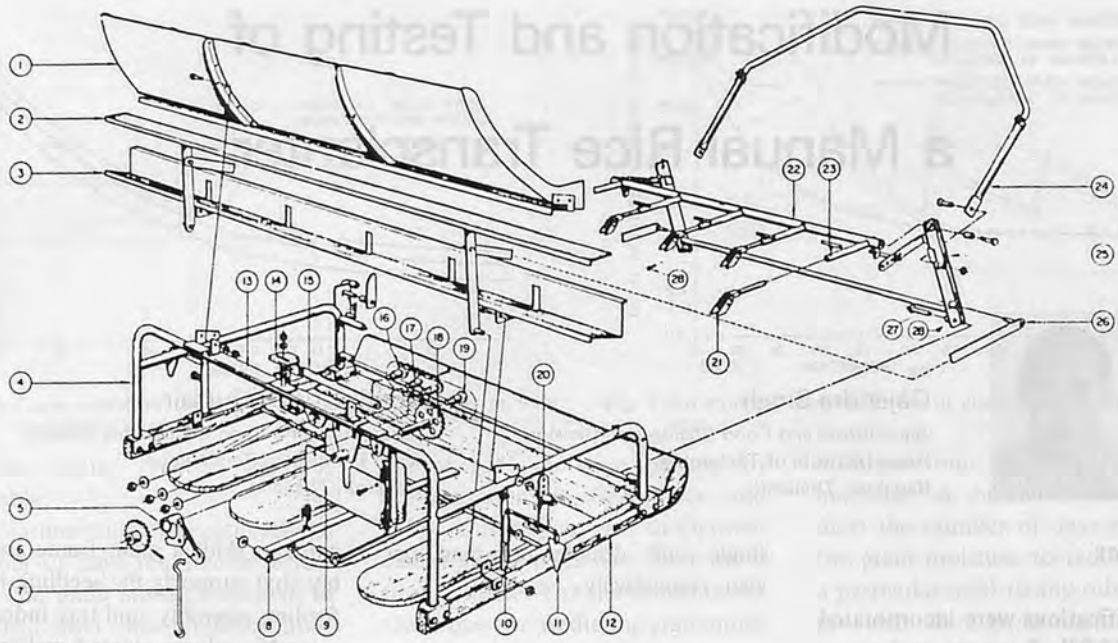

Fig. 2 Exploded view of rice transplanter.

Parts list: 1–Tray assembly (1 pc), 2–Seedling of feeder assembly (1), 3–Feeding frame assembly (1), 4–Main frame assembly (1), 5–Pawl lever assembly (1), 6–Ratchet wheel (1), 7–Connecting rod (1), 8–Tray drive lever assembly (1), 9–Chain drive cover (1), 10–Feeder lever/row guide bracket assembly (2), 11–Row guide assembly (2), 12-Skied assembly (1), 13–Carriage bar assembly (1), 14–Offset link bracket (1), 15–Offset link assembly (1), 16–Roller chain #40 (0.5" pitch) (30 links), 17–Chain guide bar assembly (1), 18–Sprocket assembly (1), 19–Chain roller assembly (2), 20–Depth control assembly (2), 21–Picker assembly (5), 22–Picker holder mechanism assembly (1), 23–Bolt handle assembly (5), 24–Handle assembly (1), 25–Pivot arm assembly (1), 26–Feeder link assembly (2), 27–Pivot arm pin (2), 28–Pin retainer screw (2).

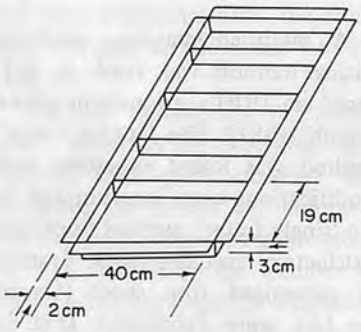

MATERIAL : Gage # 16
NOTE : Round off all sharp edges

Fig. 3 Sheet metal frame.

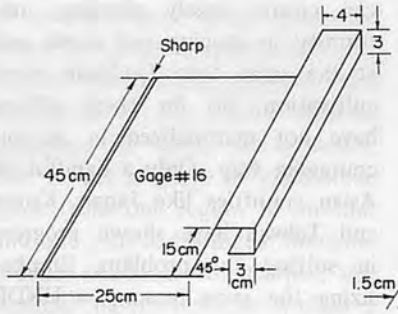

Seedling remover

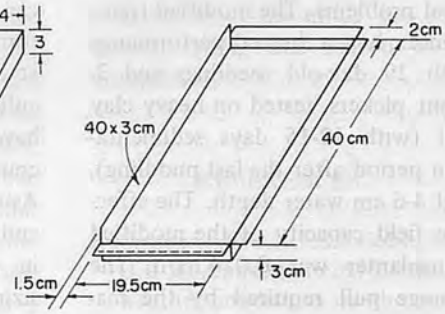

Seedling guide

Fig. 4 Seedling remover and seedling guide.

nation of remover and guide (Fig. 4) gave uniformly cut seedling mats of 1.5 cm thickness. The use of saw dust as a mat remover was also found quite effective for severing mats raised in 'double frames'.

Field Performance of Original Transplanter

An experiment was conducted to evaluate the field performance of the original transplanter (Uqaili, 1981). The effective field capacity was 76.5 h/ha or 0.013 ha/h with 90% field efficiency. The breakdowns encountered during the trial runs are shown in Table 1.

It was felt that typical rice farmers in the region will find the mat seedlings difficult to adopt readily. Similar views were also shared by the IRRI-THAI Industrial Extension Program staff. Therefore, it was decided to modify the IRRI transplanter so that it can take conventionally raised washed-root seedlings.

Table 1 Mechanical Breakdown of Transplanter

Accumulative Time of Operation (h)	Description of Breakdown
1	Boss weld broke.
2	Handle pivot lock pin came off.
5	First seedling picker broke.
7	Cam follower bar broke.
7.5	Second picker broke.
9	Offset link pin and depth control stopper came off.
18	Seedling dividers deformed and broke.
20	Test ended.

Modification and Development Work

The modified transplanter (IA-1) retains the wooden skid and handle assembly of the original transplanter. The main frame and the hopper indexing mechanism were incorporated with minor modifications. A new comb-type seedling transplanting mechanism was designed which is described below.

Seedling Transplanting Mechanism

This assembly unit (Fig. 5) is composed of seedling hopper 1, hopper and steel wire comb support frame 2, seedling pusher assembly 3, hopper indexing mechanism, feeding frame, and bristles 4. The whole assembly slides on two small rollers mounted on the main frame, which can be easily removed by loosening the two bolts as shown in Fig. 6. Other modifications which were incorporated in the machine to make the operation smoother during the course of trial runs are:

(1) Cam: Fig. 7 shows the modified (dark lines) and the original cam (broken lines). The modified cam enables a smoother retraction of the cam follower bar when the handle is pulled back.

(2) Picker Holder Bar Stoppers: Thicker curved section stoppers, with proper welding were made to absorb the impact of the picker bar when the handle is retracted.

(3) Handle Grip: A 40 cm long piece of ordinary garden hose was used on the pipe handle for better grip during operation.

(4) Pivot Arm Link Lock: While transporting the machine, it was observed that the picker assembly can drop suddenly and may cause injury to the hand. A locking bolt was provided (Fig. 8) to secure the link when not in use.

(5) Row Markers: Longer markers are provided so that they point on the second row instead of the first. This lends the operator a better view of the marker and thus help to keep the machine straight.

(6) Hopper Actuator Lever Brace: The transplanted seedlings in the first row adjacent to actuator level assembly were being pushed by the lever hub's brace. The brace was relocated to clear the way.

The overview of the modified transplanter is shown in Fig. 9. Specifications of the modified transplanter are given below.

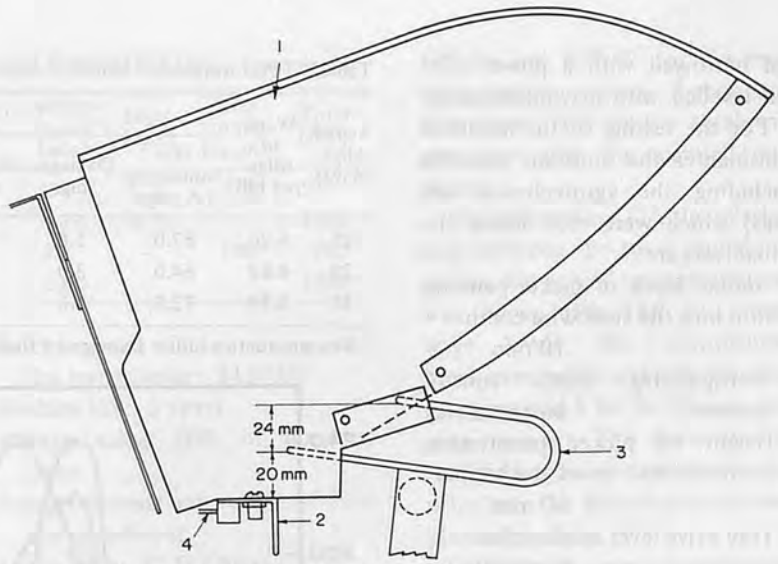

Fig. 5 Seedling transplanting mechanism.

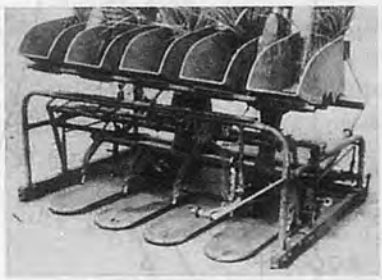

Fig. 6 Transplanting mechanism of modified transplanter being removed.

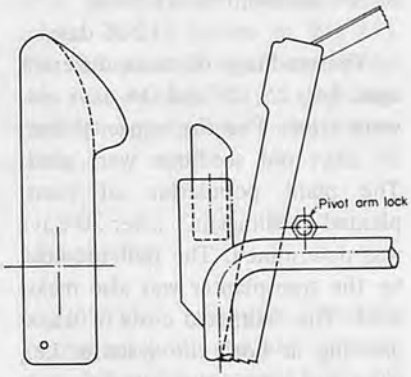

Fig. 7 Modified cam. Fig. 8 Pivot arm lock.

Fig. 9 Overall view of modified rice transplanter.

Specifications of the Modified Rice Transplanter

Model	IA-1
Type	Manually operated
Seedling	Root-washed (25-30 cm)
Power	One person
Length	160 cm
Width	116 cm
Weight (empty hoppers)	37 kg
No. of rows and spacing	5 at 20 cm
Depth of planting	3 to 6 cm
Picker assembly	3 point (fork type)

Experimental Investigation

Seeds of a certified variety RD-11 were soaked for 24 h and incubated in sacks for 36 h before sowing. A rate of 80 g/m^2 of seedbed was used. The plots were plowed with disc plow and then flooded. Then 10-15 days before transplanting, the plots were puddled

and harrowed with a power tiller and levelled with a wooden plank.

For the testing of the modified transplanter the constant variables (including the agrotechnical settings) which were met before the actual tests are:

1. Actual depth of picker penetration into the steel wire comb: 10 mm
2. Transplanting depth control stopper: bottom hole
3. Height of picker penetration from the bottom of the hopper: 30 mm
4. Tray drive lever actuator bar: bottom hole
5. Depth of water: 4-6 cm
6. Soil sedimentation period: 12-15 days

The seedlings of three different ages, i.e., 25, 29 and 34 days old, were tried. For the capacity test, 29 days old seedlings were used. The plant population of transplanted seedlings/m^2 after 30 days was determined. The pull required by the transplanter was also measured. The estimated costs of transplanting in both the systems, i.e., hand and machine was computed.

Results and Discussion

Performance of the Modified Transplanter

Transplanting Performance: **Fig. 10** shows the modified rice transplanter in operation. **Table 2** gives the summarised transplanting performance of the modified transplanter. **Fig. 11** shows graphically the average seedling distribution pattern at different ages of seedlings. The number of seedlings/m^2 at all ages fall within the optimum range of 116-175 seedlings/m^2. **Fig. 11** reveals that distribution pattern of the 25-and 29-day old seedlings are similar. Considering similarity in other performance parameters, it can be said that there was no significant difference between 25-and 29-day old seedlings; though the machine has the least percentage of non-productive, missing and damaged hills with the 29-day old seedlings, thus giving best performance with this age category.

Fig. 10 Modified rice transplanter in operation.

Table 2 Performance of Modified Rice Transplanter

Age of sdlgs. (days)	Av. no. of sdlgs. per hill	Characteristic						No. of seedlings per sq. m.
		Hill containing 1-5 sdlgs.	Damaged sdlgs.	Floating sdlgs.	Missing hills	Buried hills	Non-productive* hills	
25	4.20	67.0	5.0	8.0	8.0	2.0	23.0	125
29	4.62	64.0	3.0	7.0	7.0	–	17.0	128
34	3.59	72.0	6.0	6.0	11.0	1.0	24.0	120

* Non-productive hills = Damaged + floating + missing + buried hills.

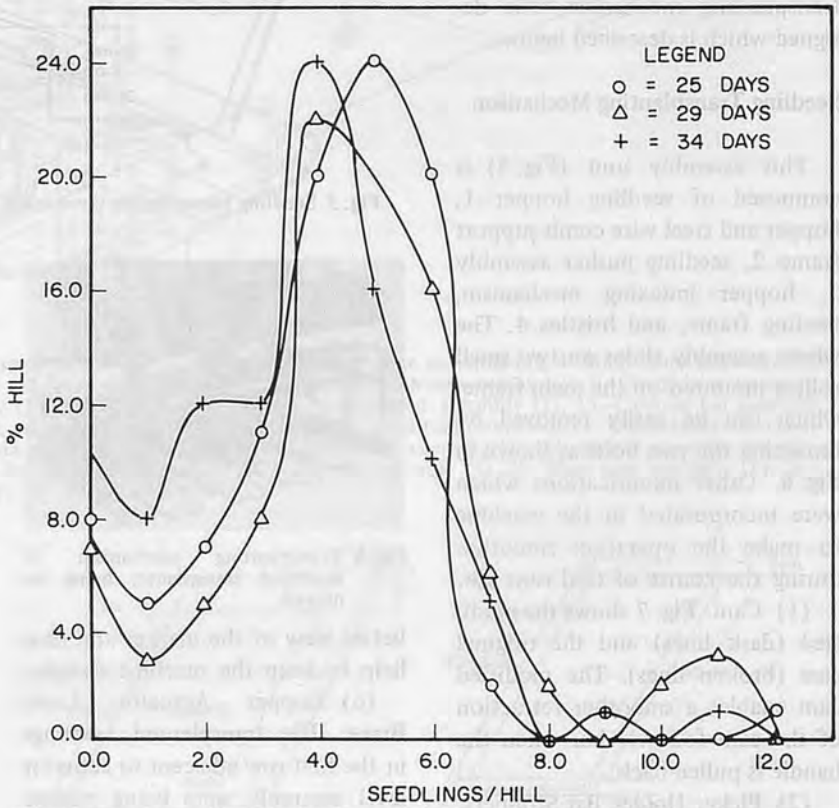

Fig. 11 Average seedling distribution of 25-, 29- and 34-day old seedlings.

Work Performance: The working capacity of the modified transplanter was measured by using the time required to transplant seedlings in 180 m^2 area. Continuous turn strips planting pattern was followed (Hunt, 1973). Also, 29-day old seedlings were used. The total operation time was 76.8 min. Thus the field capacity was 0.014 ha/h. This is equivalent to 71.1 h/ha which is about 55% of the labour requirement in hand transplanting. The various times measured are given in **Table 3**.

The average pull required by the modified transplanter was 8 kg, in

Table 3 Comparative Performance of Original and Modified IRRI Rice Transplanter

Transplanter	Planting time (min)	Turning time (min)	Seedlings supply time (min)	Adjustments (min)	Miscl. (min)	Area covered (sq. m)	Total (min)
Original IRRI	153.0	5.8	8.0	2.0	1.2	370	170
	90%	3.4%	4.7%	1.2%	0.7%		100%
Modified (IA-1)	68.4	2.9	4.1	1.4	–	180	76.8
	89.1%	3.8%	5.3%	1.8%			100%

a field with 5-7 cm water depth and soil sedimentation period of 15 days.

Field Efficiency: The field efficiency (Ef) for both the original and modified transplanters was calculated using the following equation:

$$Ef = \frac{T_o}{T_o + T_L} \times 100 \qquad (1)$$

where: T_o = theoretical operation time at theoretical field capacity

T_L = non-productive time

$$T_o = \frac{\text{Total area transplanted (m)}}{[\text{Working speed (m/s)} \times \text{Row spacing (m)} \times \text{No. of rows}]} \times \frac{1\ \text{min}}{60\text{s}} \quad [\text{min}]$$

For the original transplanter:

$$T_o = \frac{375}{0.06 \times 0.2 \times 5} \times \frac{1}{60} = 104.16 \text{ min.}$$

T_1 = 17.0 min

$$Ef = \frac{104.16}{104.16 + 17.0} \times 100 = 85.96\%$$

For the modified transplanter (IA-1):

$$T_o = \frac{180}{0.059 \times 0.2 \times 5 \times 60} = 50.84 \text{ min.}$$

T_1 = 8.4 min

$$Ef = \frac{50.84}{50.84 + 8.4} \times 100 = 85.82\%$$

Operating Costs of Machine and Hand Transplanting

The following assumptions were considered in the cost estimates.

Purchase price of the transplanter: $150.00

Machine life: 5 years

Salvage value: 10% of purchase price

Annual interest rate: 15% of average investment

Labor wage: $3.0/8 hour

Taxes, insurance and shelter: 2% of purchase price

Repair and maintenance cost: 8% of purchase price/100 h

The total cost per year (AC) for the transplanter can be expressed as:

$$AC = \text{Fixed cost} + A\,(R\&M + L)/C \qquad (2)$$

where: Fixed costs include depreciation, interest, taxes, insurance and shelter costs.

A = annual transplanted area, ha

R&M = repair and maintenance cost, $/h

L = labor cost, $/h

C = field capacity, ha/h

Table 4 shows the cost estimates of the two transplanting systems. The cost of seedling preparation which was similar in both systems was not included in the estimation.

The variable costs for transplanting 1 ha with the machine were $35.30 and $57.69 for the hand transplanting system. Labor cost constitutes 76% of the total variable cost with the manual transplanter.

From Equation (2), the relationship between the total annual cost per ha and annual transplanted area was drawn (Fig. 12). At present wage levels, the transplanter's break-even point was 2 ha for single cropping and 1 ha for double cropping per year. This shows that the modified manual transplanter can substitute the laborious hand transplanting system.

Additional costs calculation was done for the modified transplanter with $200 as the purchase price (chain dotted curves in Fig. 11). The transplanter's break-even point was 3.0 ha and 1.5 ha for single and double cropping per year, respectively.

Conclusion

(1) The mat-type seedling raising method, requires considerable skill and thus cannot be readily adopted by typical rice farmers of this region.

(2) The modified transplanter has a better performance with 29-day old seedlings. Soil sedimentation period of 12-15 days is required for heavy clay soils.

(3) The effective field capacity of the modified transplanter was 0.014 ha/h. The average pull required by the transplanter in a

Table 4 Comparative Costs in Machine and Hand Transplanting

Cost item	Machine Transplanting		Hand Transplanting	
Annual fixed costs	($/year)			
Depreciation	27.00		–	
Interest	12.38		–	
Taxes, insurance and shelter	3.00		–	
Total fixed costs	42.38		–	
Variable costs	($/ha)	($/h)	($/ha)	($/h)
Repair and maintenance	8.67	0.12	–	–
Labor	26.63	0.38	57.69	0.38
Total variable costs	35.30	0.50	57.69	0.38

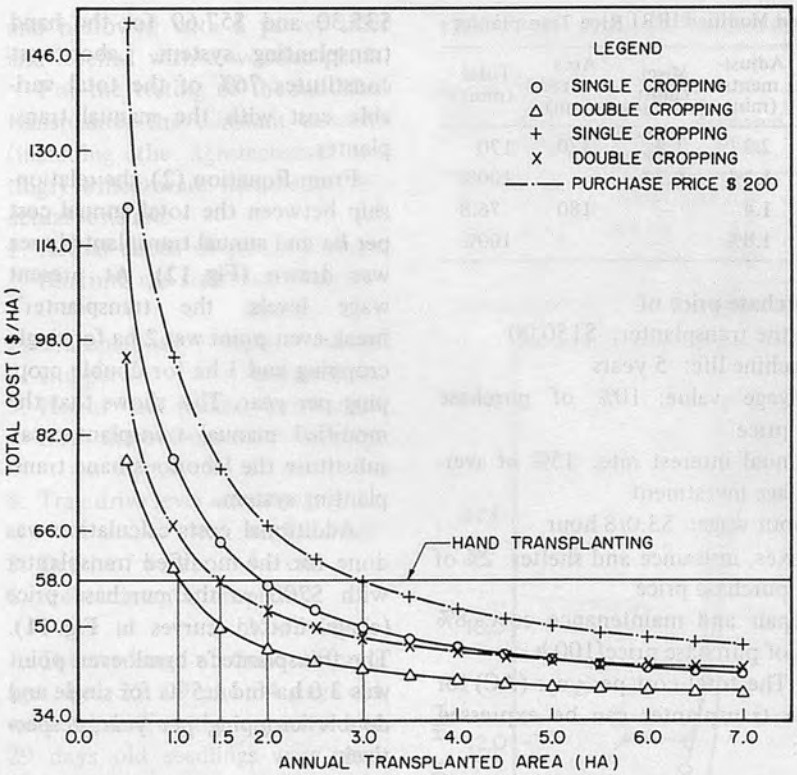

Fig. 12 Total cost and annual transplanted area.

levelled field with 5-7 cm water depth was 8 kg.

(4) At present wage levels, machine transplanting has a break-even point of 2 ha and 1 ha for single and double cropping per year, respectively.

REFERENCES

1. Boonmark, L. 1981. Farm machines making slow progress in Asia. Bangkok Post, March 12, 1981.
2. Hunt, D. 1973. Farm power and machinery management, Laboratory Manual and Workbook. Iowa State University Press, Ames, Iowa.
3. Kim, K.U. 1977. Field tests on three transplanting systems. Agricultural Engineering Department, IRRI, Philippines.
4. Uqaili, K.H. 1981. Modification and development of IRRI's manual transplanter. M. Engg. Thesis, AIT, Bangkok, Thailand.

■■

Properties of Parboiled Rice Produced from Japanese Paddy

by
Toshinori Kimura
Assistant Professor
Agricultural Machinery Department
Iwate University
Morioka 020, Japan

Abstract

Some properties of parboiled rice which was milled from Japanese paddy was investigated in this paper. Parboiling treatment could make reduce the stickiness of Japanese untreated rice and give it many advantages.

It could shorten the soaking period if raw paddy with higher moisture content was used as raw materials. This fact might contribute to improving parboiled rice production.

Introduction

Parboiled rice is a kind of processed rice which is produced in some countries of Asia, Africa and America. The main advantages of parboiling come from the fact that the treatment gelatinizes the rice starch and thus hardens the kernel. Consequently, the fissures after drying and breakage losses during milling are reduced(1).

Parboiling process consists of soaking, steaming and drying. The main process consists in soaking and steaming which give a hydrothermic treatment to the paddy. The drying process brings the paddy moisture back to an optimum level for milling and storing. The conventional parboiling consists of soaking in cold or lukewarm water for one or two days, steaming for ten to thirty minutes and drying in the sun(2).

Although the Japanese scarcely use parboiled rice, the author has studied on some parboiling characteristics in order to improve the parboiling process(3),(4),(5).

This particular study investigated the possibility of parboiling Japanese paddy and indicating the same features for good milling quality and storage quality similar to the ordinary parboiled rice.

Materials and Methods

Two varieties of paddy samples, Shiokari (Japanese – short grain) and Taichung sen #3 (native-long grain), were harvested in 1975. Three parboiled samples, Sri Lanka varieties, H-4, BG-11/11 and BG-34/8, were also harvested and processed in 1975. And three commercial products (unknown variety) on the Bangladesh market were used in addition to the five samples.

Most properties of parboiled rice were measured in conformity to the

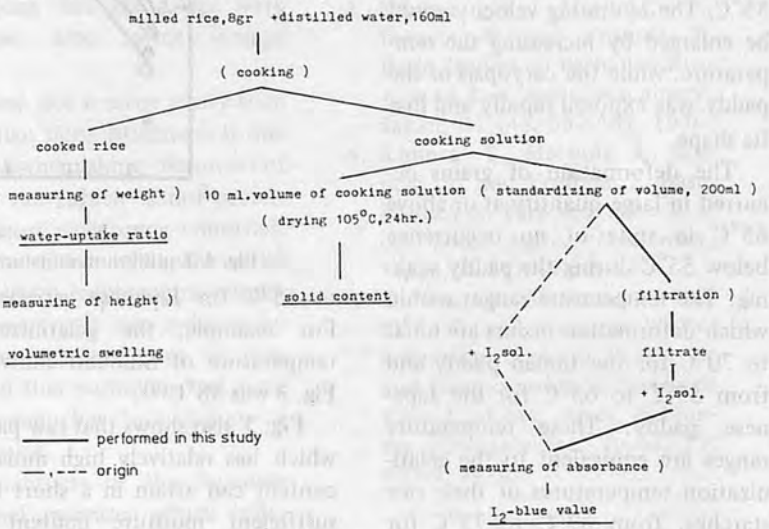

Fig. 1 Testing method of cooking quality adopted in this study.

Acknowledgement: The author wishes to thank Professor T. Yoshida, Hokkaido University, Prof. A. Hosokawa, University of Tokyo and Dr. S. Chikubu for supplying information and advice to the author. Part of this report was supported by the scientific grant of Ministry of Education, Japanese Government (No. 476188).

standard testing methods of General Food Research Institute, Ministry of Agriculture, Forestry and Fishery, Japanese Government[6]. Cooking quality was measured in conformity with the procedure shown in Fig. 1 and the degree of gelatinization was measured in conformity with the procedure of JAS #1044 (Japanese Agricultural Standard).

Water Absorption during Soaking

Sufficient and effective soaking is very important in improving parboiling process because this period represents the longest time of the parboiling process. Since each variety of paddy has its own hydrating characteristics, it is important that the hydrating properties of many varieties be ascertained in order to realize a sufficient and effective soaking. The hydrating characteristics of some Indian paddies have been reported. An example is shown in Fig. 2, reported by Bhattacharya et al[7]. Those of Japanese and Chinese paddy are shown in Fig. 3. The two figures express that the length of soaking and temperature are responsible for the hydrating velocity of paddy. Moisture content of paddy increased rapidly at or above 65°C, while it increased slowly below 55°C. The hydrating velocity could be enlarged by increasing the temperature, while the caryopsis of the paddy was exposed rapidly and lost its shape.

The deformation of grains occurred in large quantity at or above 65°C in spite of no occurrence below 55°C during the paddy soaking. The temperature ranges within which deformation occurs are 65°C to 70°C for the Indian paddy and from 55°C to 65°C for the Japanese paddy. These temperature ranges are equivalent to the gelatinization temperatures of their rice starches, from 67°C to 73°C for Indian varieties and from 58°C to 65°C for Japanese varieties[8]. For example, the gelatinization temperature of Shiokari shown in Fig. 3 was 58°C[9].

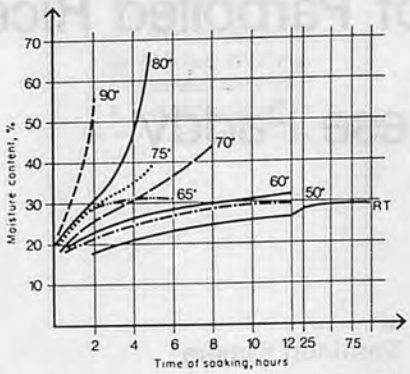

Fig. 2 Hydrating curves of an Indian paddy.

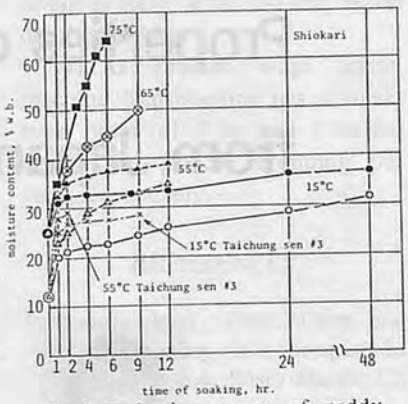

Fig. 3 Hydrating curves of paddy during soaking.

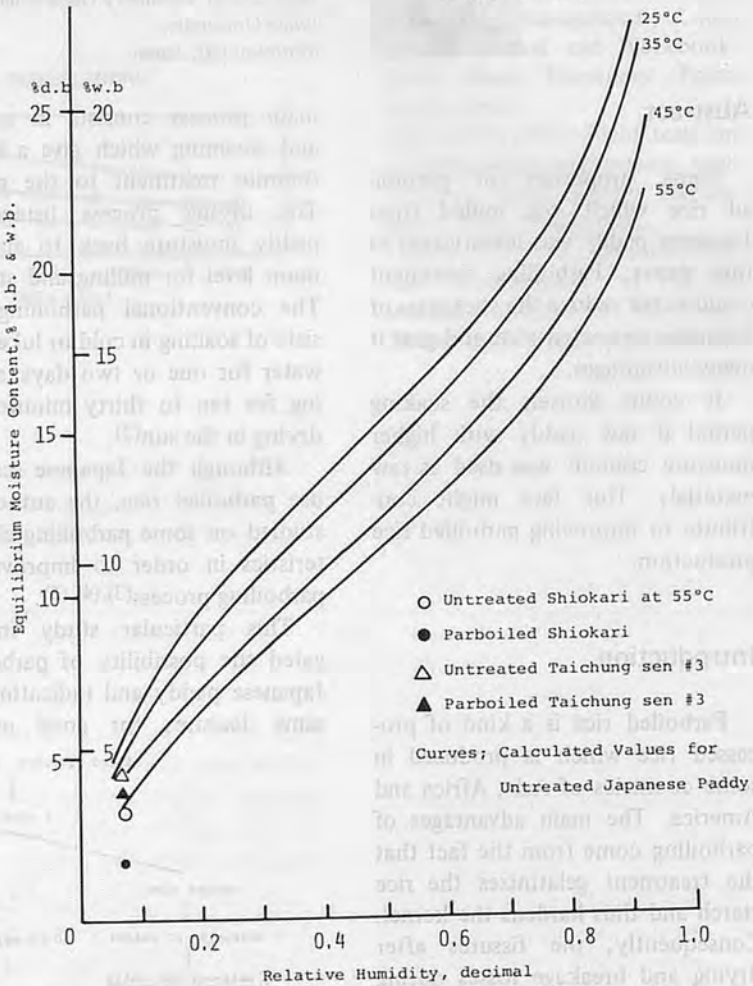

Fig. 4 Equilibrium moisture content of untreated and parboiled paddy.

Fig. 3 also shows that raw paddy which has relatively high moisture content can attain in a short time suffficient moisture content for gelatinization than dried paddy.

Fig. 3 further shows that Chinese long paddy has higher hydrating velocity than Japanese short paddy in the early part of the soaking process under the same condition of soaking temperature. This is due to the fact that long grain has larger specific surface with respect to its volume than the short grain. The

Table 1 Some Properties of Parboiled Rice.

Item	Raw Rice Shiokari	Parboiled Rice						
		Shiokari	Bangla 1	Bangla 2	Bangla 3	H-4	BG-11/11	BG-34/8
Moisture Content %w.b.	16.8	16.0	11.2	11.3	11.2	13.0	13.2	12.6
Hardness kgf	4.4	10.8	10.2	10.8	10.3	10.9	7.6	9.3
Alkali Decomposition –	2.5	4.8	2.3	5.0	3.2	3.1	4.5	3.8
Gelatinization Ratio %	9.4	40.7	–	–	–	–	–	–
FFA Content mgKOH/100 g	13.0*, 5.7**	16.8*, 10.0**	83.5**	71.4**	108.9**	–	–	–
Volumetric Swelling ml	31.6	30.2	38.0	34.6	32.4	–	–	–
Water-uptake Ratio –	2.57	2.40	3.04	2.69	2.55	–	–	–
Blue Value –	0.147	0.089	0.129	0.073	0.112	–	–	–
Solid Content g	0.661	0.472	0.312	0.280	0.280	–	–	–

* FFA Content in Brown Rice and ** FFA Content in Milled Rice.

values of specific surface were 700 cm^2/cm^3 for the Chinese long one (Taichung sen #3) and 600 cm^2/cm^3 for the Japanese short one (Shiokari). However, remarkable differences were not recognized between the hydrating characteristics of the two types with respect to the overall soaking process.

Differences of Some Properties

The drying process is important because of its long period. Drying characteristics of paddy can be analogized from the values of equilibrium moisture content which are related to drying process. Though equilibrium moisture contents of parboiled paddy have not been known sufficiently, Henderson's equation(10) is well known with respect to ordinary cereal grains. The author developed a new and compact device of the rapid measuring method. As the result, he recommends a new empirical equation(11) based upon Henderson's equation.

$$1 - rh = -1.66 \times 10^{-30} T^{10.89} \times Me^{(4.14-6.2 \times 10^{-3} T)}$$

rh – relative humidity, decimal

T – absolute temperature, °K

Me – equilibrium moisture content, % d.b.

The curves obtained from the equation and a few data of parboiled paddy are shown in **Fig. 4**. It is recognized in the figure that the Indian type (Taichung sen #3) has slightly higher value of equilibrium moisture content than those of Japanese untreated paddy which might be due to the accumulation of rice starch(12).

It was confirmed from the result that the equilibrium moisture contents of Indian and Japanese paddy were reduced by the parboiling treatment. This shows that parboiled paddy has a higher drying rate than the untreated one under the same drying conditions.

Table 1 shows some properties of the Indian and Japanese parboiled rice. The moisture contents of Japanese parboiled rice were higher than other parboiled rices, because the former was used immediately after drying and the latter were used later after some storage period.

Japanese rice is more sticky than most Indian rices. Stickiness is one of the distinguishing features of Japanese rice which is not preferable in most developing countries. The table shows that the solid content which influence the stickiness characteristic was reduced by the parboiling treatment. It was confirmed that parboiling had good effect on reducing the stickiness of Japanese rice.

The hardness of the Japanese rice kernel increased which influences the milling yield. As a result, Japanese parboiled rice indicated the same high milling yield as ordinary parboiled rices.

The free fatty acid content of Japanese parboiled rice was smaller in quantity than other parboiled rices. This might be caused by the former reason and good storage circumstances.

These results express that the Japanese parboiled rice has the same features and merits as the ordinary parboiled ones.

REFERENCES

1. C.F.T.R.I. Parboiling of Paddy. Project Circular No. 7.
2. Ali, N. and Pandya, A.C. Basic Concept of Parboiling. J. of Agric. Engng. Research, 19; 111-115, 1974.
3. Kimura, T., Matsuda, J., Ikeuchi, Y. and Yoshida, T. Basic Studies on Parboiled Rice 1. J. of Soc. Agric. Machinery, Japan, 37 (4); 557-561, 1976.
4. Kimura, T., Matsuda, J., Ikeuchi, Y. and Yoshida, T. Basic Studies on Parboiled Rice 2. J. of Soc. Agric. Machinery, Japan, 38 (1); 47-52, 1976.
5. Kimura, T., Matsuda, J., Ikeuchi, Y. and Yoshida, T. Relationship between Properties and Gelatinization of Parboiled Rice. J. of Soc. Agric. Machinery Hokkaido-Sec., Japan, 17; 60-64, 1976.

(Continued on page 58)

Development and Evaluation of a Granular Insecticide Applicator

by
M. Shyam
Agricultural Engineer
Central Potato Research Institute
Jalandhar 144003, India

Abstract

A simple and precise device for metering the systemic granular insecticide has been developed and used successfully at the Central Potato Research Institute for the application of Thimet 10-G as an attachment with the planter, fertilizer drill-cum-row marker and intercultivator for the potato crop. The variation in application rate and labour requirement was reduced substantially. Besides, the application of the poisonous insecticides has become very safe to the attendants and others in the surroundings.

Introduction

The application of systemic granular insecticides is an important component of the widely practised 'seed plot technique' for the production of healthy seed potatoes in the plains. The insecticide is applied manually either at planting or intercultivation/earthing of the crop. These insecticides are highly injurious to human beings and animals by skin contact, inhaling or swallowing. Therefore, utmost care is required in their handling and application. Besides the extreme variation in application of the insecticide and ill-effect of their smell that spreads around on the persons working, occasional incidences of poisoning of the attendants handling the insecticide are unavoidable. To overcome these problems, the development of a suitable mechanical device for the application of granular insecticide was undertaken.

Common Method of Application

Thimet 10 G is a granular systemic insecticide commonly used in potato crop for the control of viral diseases. For the production of breeders seed at the CPRI, the insecticide is applied at planting of the crop. Farmers, however, apply it at crop intercultivation/earthing which is generally done 30 to 45 days after planting. The recommended rate of application is 15 kg/ha. Important physical properties of the Thimet are:

Visual observation – Dry, granular, free flowing, non-abrasive and fairly nonhygroscopic; Shape of granules – Irregular; Bulk density – Approx. 1.11 g/cm^3; Diameter of granules – 0.3 to 0.63 mm.

For application, a small hole is pierced in the bottom of the polythene bag containing the insecticide and thereafter the bag is taken around the field manually from one row to another row. The insecticide is dropped over the rows of seed potatoes before ridging (covering with soil) or over the rows of young plants after hoeing but before earthing. The size of hole, quantity of insecticide in the bag, and the walking speed of the attendants are important factors that affected the rate of application. One person applied insecticide in about 1 ha area per day.

The variation in the application rate was measured by collecting the Thimet dropped on 2 m long polythene sheets spread over the rows during the normal operation. The application rate varied from 8.14 to 29.56 kg/ha and the walking speed of the attendants from 5.14 to 8.31 km/h. The attendants were sometimes found almost running to accommodate the vigorous stream of insecticide coming out from the bag. While resuming the application after short breaks within the fields, the attendants were occasionally found con-

Acknowledgement: The author thanks Dr. B.B. Nagaich, Director, Central Potato Research Institute, Simla for encouragements and facilities. Thanks are also due to Mr. Rajinder Singh, Mr. Tirlochan Singh and Mr. Suraj Mistry, all technical staff, CPRS, Jalandhar for their assistance in fabrication and development work and to Mr. V. Singh, Scientist for suggestions from time to time.

fused about the rows last treated with the insecticide. Thus there was a possibility of some rows receiving double treatment and a few not having received the insecticide at all. The attendants were also found using their bare fingers to stop the flow of insecticide from the bag.

Design Considerations

The important considerations in the design and development of the insecticide applicators were: i) it should work as an attachment to the common equipment such as planter, fertilizer drill-cum-row marker and intercultivator of the potato crop; ii) the application rate of the insecticide should be easily adjustable from 10 to 20 kg/ha; iii) the variation in application rate should be within ±10% of the initial setting; iv) the insecticide may be discharged as continuous stream over the rows and should be mixed in the soil close to the seed to avoid its direct contact with the seed which reportedly affect germination; v) it should not require manual handling of the insecticide; vi) the spread of smell of the insecticide should be as low as practicable; and vii) the device should be simple, easy to attach and service, and perform consistently over extended period of operation.

Metering Mechanism

Development and construction

Preliminary trials for metering the insecticide were conducted on a device consisting of a vertical wooden disk with pockets revolved in a closed casing. The results were very encouraging and accordingly a hand-operated laboratory prototype of the metering mechanism for the insecticide was developed. It consisted of a cast iron disk of 93 mm diameter having 12 pockets

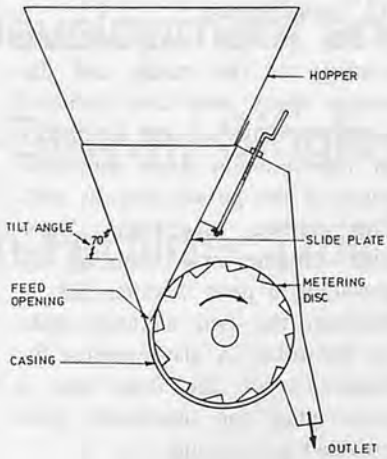

Fig. 1 Schematic Diagram of the Metering Mechanism for the Application of Granular Insecticide

on its periphery, a wooden vertical casing to hold the disk, a hopper to hold the insecticide, a slide-gate to vary the feed of insecticide to the pockets, a handle to drive the disk and discharge pipe including the chute over which insecticide spilled (**Fig. 1**). Each pocket of the disk when filled up to top contained about 0.45 g of Thimet. The pocket has gradual slope on one side and steep slope on the other side. The disk is so fitted into the casing that during operation, the filling as well as emptying of the pockets starts from the side of gradual slope. This gave better filling of pockets and relatively uniform dropping of insecticide. Later on an all steel 2-row prototype with two metering disks with a spacer of 15 mm in between was developed and mount-

Fig. 2 Close-up of the Granular Insecticide Applicator Attachment with the Potato Planter

ed on a rig for performance evaluation in laboratory. The disks of the prototype were driven by an electric motor of 1 440 rpm through a V-belt and a reduction gear box. The disk speed was changed by using suitable pulleys.

Performance

The performance of the prototypes of the metering mechanism was evaluated with dry sieved sand and Thimet for different disk speeds, feed openings, head of insecticide above the disk, and tilt angle of the casing. Results on the double disk prototype are given in **Table 1**. The flow of sand and Thimet was found fairly uniform. Maximum variation in the discharge rate of Thimet was within ±7.58% of the average discharge. The variations with sand were lower. The discharge rate increased to more than double by varying the feed opening alone. Thus the application rate could easily be

Table 1 Effect of Feed Opening and Disk Speed on Discharge of Thimet for Two-Disk Prototype

Disk speed (rpm)	Feed opening (mm)	Thimet collected (g/min)			Max. variation (%) from overall ave.	
		Ave. of 5 rep.		Overall ave.		
		LHS	RHS		(–)	(+)
19	3.5	35.88	34.48	35.18 (1.85)*	3.35	2.90
	9.0	47.94	48.02	47.98 (2.53)	0.38	0.67
	18.0	70.08	70.94	70.51 (3.71)	1.29	1.83
28	3.5	48.40	52.87	50.64 (1.81)	7.58	6.64
	9.0	70.57	71.19	70.88 (2.53)	1.24	1.58
	18.0	103.83	103.80	103.82 (3.71)	1.27	1.14
33	3.5	65.58	65.62	62.60 (1.90)	1.68	2.13
	9.0	84.16	86.60	85.38 (2.59)	2.79	2.25
	18.0	123.11	119.70	121.40 (3.67)	3.22	3.31

* Figures in parenthesis are Thimet dropped in g/rev. of the disk.

adjusted from 10 to 20 kg/ha by varying the feed opening. The effects of variation in disk speed (up to 33 rpm) and head of insecticide in the hopper were negligible. The discharge rate, however, increased by increasing the tilt angle of the casing. A tilt angle of 70° was found suitable.

The performance of the metering mechanism over extended periods of operation (25 h) in continuous cycles of 3 to 6 h each was found fairly consistent for disk speeds of 19, 28 and 33 rpm, and feed openings of 3.5 to 18 mm. No abnormality of any kind was observed either on the metering disk or inside the casing after 25 h of operation.

Insecticide Applicator Attachment

The insecticide applicator attachment with the slow speed (1.2 to 1.6 km/h) ring-feed type potato planter and high speed (4.5 to 7.2 km/h) fertilizer drill-cum-row marker were developed in 1978 and 1980, respectively. Similar attachment with the 3-row potato intercultivator-cum-top dresser was fabricated by a firm at Jalandhar in 1979 (3).

Construciton

The attachment comprised of 2 pieces of 2-row units fitted to the main frame of the planter/ferti-drill. The common bicycle chain and sprockets were used for power transmission to the rotor of the right side unit. The power was derived from the countershaft of the planter and the agitator shaft of the ferti-drill, both were driven by a land wheel. The speed ratio was 6:11 in the attachment with the planter and 1:1 with ferti-drill. The power to the left side unit was transmitted by connecting the rotor shaft of two units with a G.I. pipe of 12.7 mm diameter.

The patterns and aluminium castings of the casing and discharge spout were later prepared in 3-row units selected for utility in the common 3-row intercultivator of the potato crop as well. The castings used were 2-row unit (middle row dummy) by providing a plain wooden disk in between the two metering disks on the rotor. A glass window for inspection of the disks and a drain plug for insecticide were provided in the casing.

With the planter, two different arrangements were made for the placement of the insecticide. In the first arrangement, the insecticide was dropped in front of the furrow openers of the planter so that it scattered and mixed with the soil before placement of seed. In second arrangement the insecticide was dropped into the seed pipe of the planter with the presumption that it would mix with the soil at least partially during seed covering by the ridger bottoms of the planter. With the ferti-drills the insecticide was dropped at the rear most point of the fertilizer furrow openers.

Field performance

The two metering units were calibrated separately like a seed drill according to the procedure described in IS Test Code (1). The application rate was found adjustable from 10 to 20 kg/ha by varying the feed opening. No attendant was required during its operation except for pouring the insecticide into the hopper. The hoppers once filled lasted for about 1 h.

Mixing of the insecticide with the soil was better when dropped in front of the furrow opener than through the seed pipe of the planter. In the ferti-drill, the insecticide was found placed about 2 cm below the soil surface. There was, however, no effect of method of placement of insecticide on seed germination.

The attachment on the planter was used satisfactorily for the application of Thimet and also Forate at the rate of 15 kg/ha in 30 ha every year from 1978 to 1980 at Jalandhar. After a few hours of continuous operation, the attendants riding the planter, however, reported of slight uneasiness due to smelling of Thimet. The attendants were, therefore, replaced after every two hours interval.

The attachment on the ferti-drill worked quite satisfactorily for the application of Thimet at the rate of 15 kg/ha in about 50 ha each at Jalandhar and Daurala in Oct.-Nov., 1981. It was operated at 5 to 7 km/h forward speed covering about 5-6 ha/day which was sufficient for three planters to work simultaneously. Unlike the planter the attendants riding the ferti-drill worked continuously for the full day without any sense of uneasiness.

The insecticide applicator attachment with 3-row intercultivator-cum-top dresser has repeatedly been working satisfactorily for the application of Thimet at the recommended rate since 1979 (2).

REFERENCES

1. Anonymous, 1971. Indian Standard Test Code for Seed-cum-Fertilizer-Drill. 1 S: 6316-1971.
2. Personal discussions of Er. M. Shyam with Sh. R. R. Sondhi, Progressive Farmer, Fazalpore, Via Kartarpur, Jalandhar-144001, India.
3. Sehra Tractor and Motor Engng. Works, N.G. Road, Jalandhar-144001, India.
4. Shyam, Murari, Virendra Singh and Rajender Singh, 1981. Improved implements for the placement of fertilizers (Hindi). Kheti, January, 1981. ■■

Design, Development and Testing of a Bullock-Drawn, Single-Row Seed-Cum-Fertilizer Drill

by
D.N. Sharma
Assistant Agricultural Engineer
Department of Agricultural Engineering
Haryana Agricultural University
Hissar 125004, India

N.K. Bansal
Assistant Scientist (Agr. Engg.)
Department of Agricultural Engineering
Haryana Agricultural University
Hissar 125004, India

M.L. Jain
Professor and Head
Department of Agricultural Engineering
Haryana Agricultural University
Hissar 125004, India

Abstract

For mechanized sowing of any crops, a suitable sowing machine is vital as it places the seed and fertilizer in the zone of moisture and at desired depth. A single-row, seed-cum-fertilizer drill with combined furrow opener for seed and fertilizer, lugged drive wheel and separate boxes for seed and fertilizer has been designed, developed and tested. Trials were conducted at the farmer's fields in different villages and research farm of Haryana Agricultural University (HAU), Hissar to compare the performance of the drill with control, i.e., kera/pora method of sowing in wheat, cotton and gram crops. On an average, 195 to 224 seedlings/m^2 in wheat were obtained (depending upon seed rate) irrespective of variety used. The average increase in grain yield of wheat was 24.92% with the use of seed drill over control (kera). The drill was also capable of establishing 83 700 plants/ha in cotton crop which was higher than the desired plant population. It gave better germination in sowing of gram as compared to pora method resulting in an increase of 20% in yield over control (12.5 q/ha).

Introduction

The right placement of seed and application of basal dose of fertilizer help in achieving better yields which are directly affected by healthy germination, crop stand and plant population. Placement of fertilizer is very essential for optimum utilization. Sirohi (1980) reported that the germination of seed was uniform and two days quicker with the use of seed drill as compared with kera. Timeliness in sowing is another important factor as it helps in taking full advantage of the soil moisture. A study (Roy and Vishwanathan, 1977) has shown that the use of seed drill gives an increase of 12.5% in wheat yield and it reduces the time required for sowing by 40%. Of course, the sowing in time depends upon the size of drill. Besides, this recommended quantity of seed should be sown and proper inter-row spacing should be maintained. Ali this can be well accomplished with a seed-cum-fertilizer drill. Bahl et al (1980) reported an increase in wheat yield upto 15-20% by the use of seed-drills over traditional methods. Inspite of this, most of the farmers are not adopting these machines because of high cost and their lack of technical knowhow. They are still using traditional desi plough with kera/pora giving poor germination.

It was, therefore contemplated that a single-row, bullock-drawn seed-cum-fertilizer drill with smaller capacity but simple in construction and with low initial cost will find acceptance to a vast majority of farmers. It is in this context that a single-row, bullock-drawn seed-cum-fertilizer drill has been designed, developed and tested for sowing of wheat, gram and cotton. It has also been successfully demonstrated in many fields of the farmers.

Design considerations:

a. Low cost so that small farmers can afford it.
b. Suitability for different crops.
c. Simplicity in construction.
d. Ease of operation and adjustment.
e. Uniform placement of seed.
f. Arrangement for adjusting seed

rate.

g. Arrangement for uniform placement of required quantity of fertilizer.
h. Combined furrow opener for seed and fertilizer.
i. Suitable depth control mechanism.

Details of Construction

Frame – The frame was fabricated by welding 40x40x3mm mild steel angle iron pieces together (Figs. 1 and 2). To the rear end of the frame, the furrow opener is attached with the help of nuts and bolts and to the front end a wooden beam is attached for hitching the bullocks to the drill. It also supports ground wheel, seed and fertilizer boxes.

Ground Wheel – It is a 30 cm diameter lugged wheel made from 30x5 mm mild steel flat with 25 mm long lugs welded on it. The ground wheel is fitted on the left side of the frame with the help of

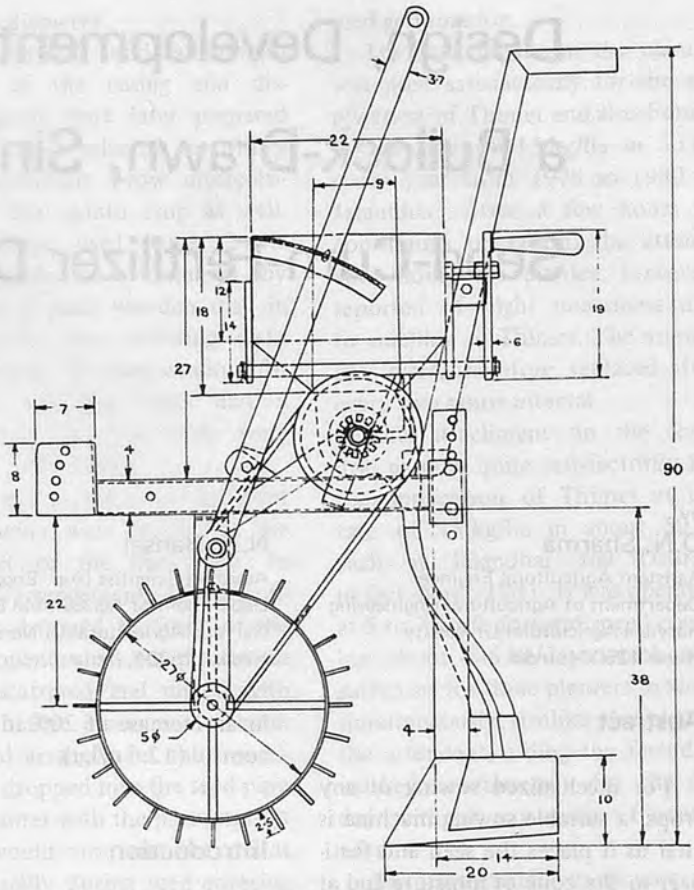

Fig. 1 Side view of single row seed-cum-fertilizer drill.

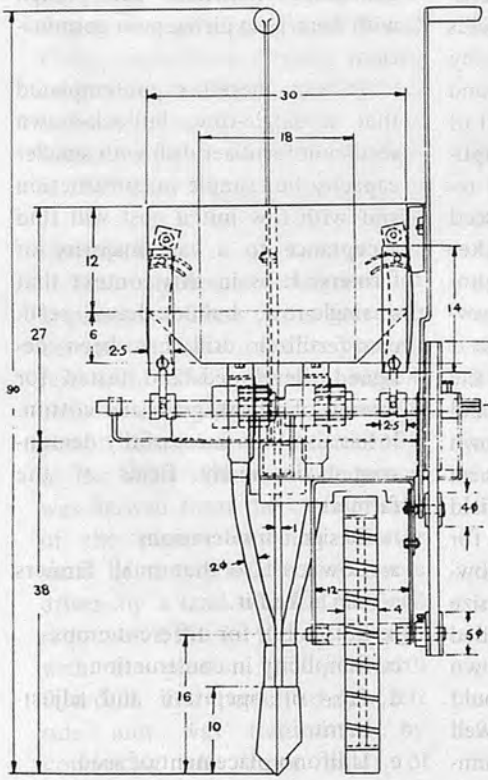

Fig. 2 Front elevation of single row seed-cum-fertilizer drill.

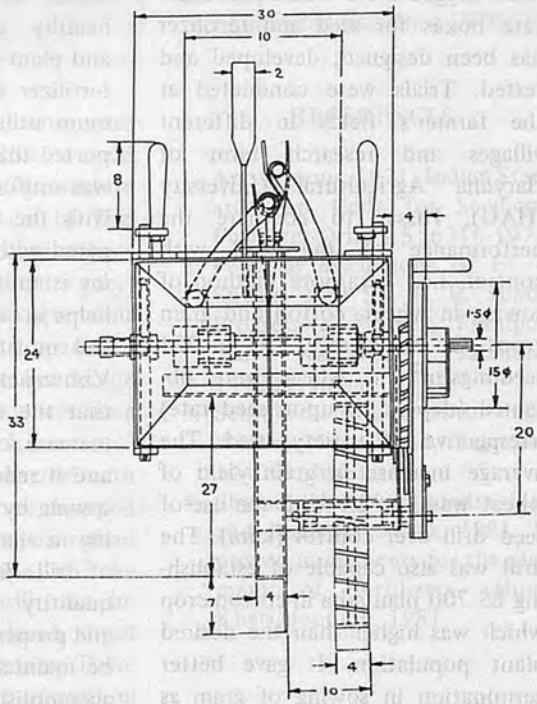

Fig. 3 Top plan of single row seed-cum-fertilizer drill.

supports. A 5 cm diameter V-pulley is fitted on one end of the shaft of the ground wheel for giving drive to the seed and fertilizer metering shaft through a V-belt pulley arrangement.

Furrow Opener – A combined furrow opener for seed and fertilizer was fabricated from 3 mm thick mild steel sheet. The shape of furrow opener (**Fig. 3**) is such that the fertilizer is placed about 2-2.5 cm to the side and below the seed and there is no clogging of tubes conveying seed or fertilizer. The depth of sowing can be adjusted according to the requirements as there are equally spaced holes provided on the frame as well as furrow openers for clamping these together.

Power Transmission System – Power from the ground wheel is transmitted through a V-belt pulley arrangement to the seed and fertilizer metering shafts (which are coupled through a slotted hollow bush). The belt can be tightened or loosened with the help of an idler provided in the system.

Seed and Fertilizer Boxes – The rectangular boxes, one for the seed (capacity 5 kg) and other for fertilizer (5 kg), fabricated from 20 gauge mild steel sheet are mounted on the frame with the help of supports.

Seed and Fertilizer Metering Mechanism – Separate fluted roller assemblies were provided to ensure uniform dropping of both seed and fertilizer. Two levers operating independently adjust the rate of application of seed and fertilizer.

Hitch and Beam – On the front side of the frame, arrangement for hitching the machine with the wooden beam has been provided. There are also adjustments by which depth of sowing can be varied at will. Besides, if a camel is to be used to operate the machine, the beam can be adjusted accordingly.

Performance Evaluation

Field trials were conducted on single-row, seed-cum-fertilizer drill vis-a-vis kera/pora methods at farmer's fields to study the effect of plant stand and the yield of wheat crop during 1980-81 and 1981-82. The varieties of wheat were WH-147, WH-157, and Sonalika. A uniform dose of 120 kg nitrogen and 60 kg superphosphate per ha was given to maintain the fertility status of the soil. Other cultural operations were given as and when required. The seed drill was calibrated in the field with the help of nomograph developed by Sharma and Bansal (1980). The seed rate was kept at 100-125 kg/ha as desired by the farmers.

The performance of the single-row seed-cum-fertilizer drill was compared with five other sowing machines in H-777 variety of cotton at the Research Farm, HAU, Hissar during 1980-81. A seed rate of 15 kg/ha (acid delinted seed) was used in all the treatments except in cotton planter (10 kg/ha). Data on seed germination and plant stand after thinning was recorded.

The drill was also tested and demonstrated for sowing of gram in comparison with pora method of sowing in the fields of farmer. The fields were prepared after pre-sowing irrigation and sowing was done on 6th Nov., 1981. Single superphosphate at the rate of 250 kg/ha was applied as basal dose and seed rate was 50 kg/ha in both cases.

Results and Discussion

The single-row, seed-cum-fertilizer drill was tested under late sown conditions (sown between the period Dec. 3 to Dec. 20, 1980) at five fields of farmers in comparison with kera method (**Table 1**). The germination was 224 seedlings/m^2 with the seed drill against 158 seedlings/m^2 obtained by the kera method. The increase in grain yield was 32.4% with the use of drill over traditional method i.e. kera (34.0 q/ha). Singh and Singh (1981) observed an increase of 17.3% in wheat yield using the "malviya" drill at the farmer's fields. This might be due to uniform germination, higher plant population and proper placement of fertilizer, specially the phosphatic type at the time of sowing.

Table 2 reveals the impact of seed-cum-fertilizer drill in wheat

Table 1 Effect of Seed-cum-Fertilizer Drill under Late Sown Condition at Farmer's Field (1980-81)

Treatment	Variety	Seed rate (kg/ha)	Germination/ m^2	Grain yield (q/ha)	Increase over control (%)
Kera (control)	WH-147	100.0	158±16.5	34.4	–
Single row seed-cum-fertilizer drill	Sonalika	125.0	224±12.5	45.0	32.35

Table 2 Performance of Single-row, Seed-cum-Fertilizer Drill in Wheat at Farmer's Field (1981-82)

Treatment	Variety	Seed rate (kg/ha)	Germination/ m^2	Grain yield (q/ha)	Increase over control (%)
Kera (control)	WH-147	100.0	139±16.5	37.5	–
	WH-157	125.0	145±13.2	35.0	–
Single row seed-cum-fertilizer drill	WH-147(2)	100.0	218±5.4	47.25	26.00
	WH-157(4)	125.0	195±3.8	40.75	16.43

Figures in parenthesis indicate the number of demonstrations.
Average yield = 44.0 q/ha; Overall increase = 21.2%.

Table 3 Effect of Sowing Implements on Cotton Plant Stand

Implement	Average Germination per m^2	Average Plant Population before Thinning (No. of plants per ha)	Average Plant Population after Thinning	
			(No. of plants per m^2)	(No. of plants per ha)
*Single row seed-cum-fertilizer drill (B.D.)	23.83	238 300	8.37	83 700
*Three row seed-cum-fertilizer drill (B.D.)	12.30	123 000	7.31	73 100
Tractor drawn seed-fertilizer drill (Sawstik)	13.65	1 365 000	6.18	61 800
Tractor drawn cotton planter (Escort)	6.33	63 300	4.36	43 600
Single row cotton drill (Pora)	3.76	376 000	3.33	33 300

*Developed in the Department of Agricultural Engineering, HAU.
Location: Research Area, Department of Agronomy, HAU; Date of sowing: Dec. 6, 1980; Variety: H-777 (acid-delinted); Seed rate: 15 kg/ha; Row to Row sowing: 60 cm; Recording of germination date before thinning: 80/6/20; Recording of plant stand date after thinning: 80/8/20.

crop at farmer's fields (1981-82). The varieties WH-147 and WH-157 were sown in eight farmers' fields. The germination was 195 and 218 seedlings/m^2 in WH-157 and WH-147, respectively, with drill while it was 145 and 139 seedlings/m^2, respectively, with the kera method.

Germination was uniform with the use of seed drill (**Table 2**). There was an increase of 16 to 26% (average increase 21.2%) in grain yield with the use of seed drill over control plots irrespective of variety used and field conditions. Sharma et al (1980) observed 19.1% increase in wheat yield with the use of seed-cum-fertilizer drill at farmer's fields under normal sown conditions. Singh and Chancellor (1977) observed up to 26% more yield of wheat by seed drills at the farmers' field.

Table 3 shows the effect of sowing mechanics on plant stand in cotton. Highest average germination (23.83 seedling/m^2) was observed with single-row seed-cum-fertilizer drill followed by tractor-drawn seed-cum-fertilizer drill (13.65 seedlings/m^2) and three-row, bullock-drawn seed-cum-fertilizer drill (12.3 seedling/m^2), respectively. The lowest germination was recorded in the single row cotton drill (3.76 seedling/m^2).

Plant population was recorded after proper thinning of the crop. Except for the cotton planter and single-row cotton drill, all the other machines gave plant population more than the desired density. This indicates that further thinning is required in these treatments in order to obtain plant stand (55 000/ha). Otherwise there will be reduction in yield. Though plant population with tractor-drawn planter was only 43 600/ha, its stand was quite uniform. The lowest plant stand 33 300/ha was obtained with the use of the single-row cotton drill because of improper placement of seed in the soil.

Test results of the single-row, seed-cum-fertilizer drill in gram are given in **Table 4**. Seed germination is higher (44±1.6 seedlings/m^2) and uniform when sown with the drill as compared to the pora method (23±5.8 seedlings/m^2). The yield parameters such as the like number of pods/m^2 and number of grains/pod are slightly better with the use of the seed drill. An increase of about 20% in grain yield over the control (12.5 q/ha) was recorded with the single-row seed-cum-fertilizer drill at the farmer's field. This may be due to proper placement of seed and fertilizer in lines resulting in uniform germination and higher plant population.

Table 4 Effect of Seed Drilling on Yield and Attributes

Unit: g

Attribute	Drill*	Pora**
Germination/m^2	44±1.6	23±5.8
Pods/m^2	571.2	470.7
No. of grains/pod	2.0	1.8
100 grain weight (g)	13.90	13.0
Grain yield (q/ha)	15.0	12.5
Percent increase over control	20.0	–

Variety: H-208; Date of sowing: 6th Nov., 1981; *Single row seed-cum-fertilizer drill; **Desi plough attached with funnel.

REFERENCES

1. Bahl, V.P.Sharma, D.N. and Jain, M.L. 1980. Design of single row bullock-drawn seed-cum-fertilizer drill. Indian Soc. Agric. Eng. New Delhi Paper No. 80-0106.
2. Sharma, D.N., Dhiman, S.D., Bansal, N.K. and Jain, M.L., 1981. Effect of seeding machinery on performance of wheat crop. Presented in first National Seminar on Wheat Agronomy held at IARI, New Delhi, 6-8th July.
3. Sharma, D.N. and Bansal, N.K. 1980. Now you won't wrong with your seed rate. Intensive Agric. 18(7). 11-12.
4. Singh, S.R. and Singh, Yashwant. 1981. Malviya multi farming machine. Indian Soc. Agric. Eng. Karnal, Haryana Paper No. 81-EMP-401.
5. Shirohi, B.S. 1980. Design parameters of manual operated seed-cum-fertilizer drill. Indian Soc. Agric. Eng. New Delhi. Paper No. 80-0161.
6. Roy, K. and Vishwanathan, K.N. 1977. Increased agricultural productivity through technology-A review. Proc. National Seminar on Technology for Agriculture Development. Chandigarh. Page 85-88.
7. Singh, Gajendra and Chancellor, W.J. 1977. Relationship between farm mechanization and crop yield in an Indian farming district. Proc. National Seminar on Technology for Agriculture Development, Chandigarh, Page 34-49. ■■

Accuracy of Measurement of Soil Water by Neutron Probe

by
Md. Abdur Rab
Lecturer
Department of Agricultural Engineering and Basic Engineering
Bangladesh Agricultural University
Mymensingh, Bangladesh

Abstract

Wheat growing lysimeter tanks were exposed to drought at various soil water levels. Neutron probe data were collected and pooled. The average standard error and confidence limits of neutron probe readings, soil water content and change in total soil water content for a 0-100 cm soil profile were computed. The confidence limit for change in total soil water content for a 0-100 cm soil profile was ±4.4 mm indicating that if this neutron probe is to be used for measurement of change in soil water content and finally to estimate the evapotranspiration for two to three days interval, this may give negative evapotranspiration, especially in Danish climate where daily evapotranspiration ranges from 3 to 5 mm during the summer period. For top soils, the neutron probe function was determined experimentally from periodic soil samples and neutron probe readings. The experimental regression equation was compared with the manufacturer's equation and it was found that any one of the two equations could be used to calculate the soil water content of top soils.

Introduction

Several researchers use soil water balance method for estimation of evapotranspiration for field crops (Mogensen, 1980; Rab, 1981 and others). The water balance in soil can be given by

rainfall + irrigation =
percolation + ΔW + ET

where, ΔW is the change in volume of water stored in the soil during some specified time period. Rainfall and irrigation could be measured easily. For experiments conducted in lysimeter tanks, percolation could be measured precisely and run-off could be controlled. Periodic sampling of volumetric soil water content by gravimetric, neutron probe or other methods permits estimation of ΔW. The neutron probe method is a rapid means of making *in situ* measurement of soil water from different soil depths (Michael, 1978). The measurements of the change in soil water content by neutron probe may reflect the estimation of evapotranspiration.

In the present experiment in wheat growing, lysimeter tanks were exposed to drought at various soil water levels, neutron probe readings were taken and the accuracy of measurement of soil water content was investigated. For top soils the neutron probe function was compared with gravimetric method.

Materials and Methods

The experiment was conducted in lysimeter tanks at the climate and water balance station "Hojbakkegard", situated about 20 km west of Copenhagen (55°40′N, 12°18′E; 28 m above sea level), Denmark.

Four sets of neutron probe data were collected (**Table 1**) from two wheat growing lysimeter tanks (2 data sets from fully irrigated and 2 data sets from drought tank).

In each tank, 32 neutron probe readings (counts/30 sec.) were taken at 50 cm depth from soil surface. After 16 readings the neutron probe was kept at rest for 20 min with power on. For each data set, the standard error of neutron probe reading (count/30 sec.) and soil water content (vol. %) were calculated by using the equation (Snedecor and Cochran, 1978):

$$S = \sqrt{(X-\bar{X})/(n-1)}$$

The pooled average standard error

Table 1 Neutron Probe Data for Calculating Confidence Limit for Neutron Probe Reading, Soil Water Content and Change in Total Soil Water Content

No. of Readings	Neutron Probe Reading Counts/30 s			
	Full irrigated lysimeter tank 1		Drought lysimeter tank 14	
	Data set no.			
	1	2	3	4
1	284	293	225	226
2	287	292	228	223
3	291	285	224	229
4	290	294	223	232
5	288	287	221	226
6	280	281	220	227
7	290	286	224	232
8	291	285	224	224
9	287	289	229	220
10	290	288	223	225
11	280	287	229	226
12	283	285	231	227
13	288	294	222	227
14	290	287	231	228
15	287	292	229	223
16	285	292	232	223
X	286.9	288.6	225.9	226.1
S	3.6	3.9	3.9	3.2

of neutron probe reading and soil water content were calculated by using the equation (Snedecor and Cochran, 1978):

$$S_X = \sqrt{[((n_1-1)\,S_1^2 + (n_2-1)\,S_2^2 + (n_3-1)\,S_3^2 + (n_4-1)\,S_4^2] / [(n_1+n_2+n_3+n_4-4)]}$$

where, S_X is the pooled average standard error; S_1, S_2, S_3, S_4 are the standard error for four data sets respectively.

From the pooled average the standard error of soil water content (vol. %), the standard error of soil water content in mm was calculated by using the equation:

$$S_{X.K} = Q\sqrt{S_X^2}$$

where, $S_{X.K}$ and S_X are the standard error of soil water content in mm and vol. %, respectively; and Q is the factor for converting vol. % to mm. The standard error of soil water content for a 0-100 cm soil profile was computed by using the equation:

$$S_T = \sqrt{(S_{10}^2 + S_{20}^2 + S_{30}^2 + S_{40}^2 + S_{50}^2 + S_{70}^2 + S_{90}^2)}$$

where, S_{10}, S_{20}, S_{30}, S_{40}, S_{50}, S_{70} and S_{90} are the standard error of soil water content in mm at 10, 20, 30, 40, 50, 70 and 90 cm soil depth, respectively.

The confidence limits for neutron probe reading and soil water content (vol. %) at any depth and total soil water content (mm) for 0-100 cm soil profile were calculated by using the equations:

$$\pm t_\alpha S_C\,;\ \pm t_\alpha S_V\,;\ \pm t_\alpha S_T$$

where, S_C, S_V and S_T are the pooled average standard error of neutron probe reading (counts/30 sec.), soil water content (vol %) and total soil water content (mm) for a 0-100 cm soil profile, respectively; t_α is the tabulated values from t-distribution at certain level of significance with particular degrees of freedom (Snedecor and Cochran, 1978). The standard error of change in total soil water content for a 0-100 cm soil profile, $S_{\Delta W}$ was calculated by using the equation:

$$S_{\Delta W} = \sqrt{(S_{T_1}^2 + S_{T_2}^2)}$$

where, S_T is defined before; Subscripts 1 and 2 refer to two successive measurements of soil water content. As standard error of total soil water content is similar for each measurement of each neutron probe, the above equation becomes

$$S_{\Delta W} = \sqrt{2S_T^2}$$

Finally, to determine the accuracy of change in total soil water content (mm) for a 0-100 cm soil profile (ΔW), the confidence limits with 95% and 99% probability levels were calculated by using the equation:

$$\pm t_\alpha S_{\Delta W}$$

To compare the neutron probe function for top soils with gravimetric method, soil samples were collected at various soil water content from 10 to 15 cm depth. Three samples were collected from each lysimeter tank. The samples were oven dried at 105°C for 24 hours and soil water content by volume percent was determined. Simultaneously neutron probe readings were taken at 10 cm depth in each lysimeter tank and soil water content by volume percent was calculated using the neutron probe function for top soils:

$Y = 0.0824X - 9.02$ (supplied by the manufacturer)

where, Y is the soil water content by vol. %, X is the neutron probe reading (counts/30 sec.) at 10 cm soil depth. The soil water content (vol. %) by gravimetric method and neutron probe readings were used to determine the regression equation:

$$Y_1 = a_1 + b_1 X_1$$

where, Y_1 is the soil water content (vol. %) by gravimetric method, X_1 is the neutron probe reading (counts/30 sec.). And also the regression equation:

$$Y_2 = c + d\,X_2$$

was developed from soil water content; in which Y_2 is the soil water content (vol. %) by gravimetric method, X_2 is the soil water

content (vol. %) by neutron probe method. Statistical tests were used to determine the relationship between soil water content computed by gravimetric and neutron probe method and to compare the above two equations.

Results and Discussion

The pooled average standard error and confidence limits of neutron probe reading, soil water content and change in total soil water content are given in **Table 2**. The confidence limits for soil water content at any depth with 95% and 99% probability were ±0.58 and ±0.80 vol. %, respectively. The confident limits for change in total soil water content (ΔW) for a 0-100 cm soil profile with 95% and 99% probability were ±3.2 and ±4.4 mm, respectively. Similar result was reported by Kristensen and Jensen (1975). They found the uncertainty of the neutron scattering method ±5 mm for a 0-150 cm soil layer.

The confidence limits for change in total soil water content indicate the degree of accuracy of estimation of evapotranspiration. The results also reveal that if this neutron probe is to be used for measurement of change in soil water content and finally to estimate evapotranspiration for two to three days interval, this may give negative evapotranspiration especially in Danish climate where daily evapotranspiration ranges from 3 to 5 mm during the summer period. These results were supported by Talukder (1981).

The regression equation of the soil water content determined by gravimetric method on neutron probe readings was:

$Y_1 = 0.0803X_1 - 6.4$

$Sb_1 = 0.0045$

Table 2 Standard Error and Confidence Limit of Neutron Probe Reading, Soil Water Content and Change in Total Soil Water Content

	Neutron probe reading, counts/30 s	Soil water content at any depth, vol.%	Total soil water content for a 0-100 cm soil profile, mm	Change in soil water content for 0-100 cm soil profile, mm
Standard error	3.65	0.29	1.13	1.59
Confident limit with 95% prob.	±7.5	±0.58	±2.3	±3.2
Confident limit with 99% prob.	±10.1	±0.80	±3.1	±4.4

where, Y_1 is the soil water content (vol. %) by gravimetric method, X_1 is the neutron probe reading in counts/30 s. The test of significance of regression coefficient 0.0803 showed, it is significantly (P = 0.01) different from horizontal line. The relation between soil water content determined by neutron probe and gravimetric method is shown in **Fig. 1**. The regression equation of soil water content determined by neutron probe method (Y_2) on soil water content by gravimetric (X_2) method was:

$Y_2 = 0.9704X_2 - 1.8$

$Sb_2 = 0.0687$, $r = 0.9707$

In testing the correlation between the soil water content determined by gravimetric and neutron probe method, the null hypothesis $p = 1$ was significantly (p = 0.01) accepted which indicates that there is a relationship between soil water content determined by gravimetric and neutron probe methods. The regression equations determined from experimental data and supplied by the manufacturer are shown in **Fig. 2**. The test of comparison of two regression equations are:

Y = 0.0824X-9.02 (supplied by the manufacturer) and

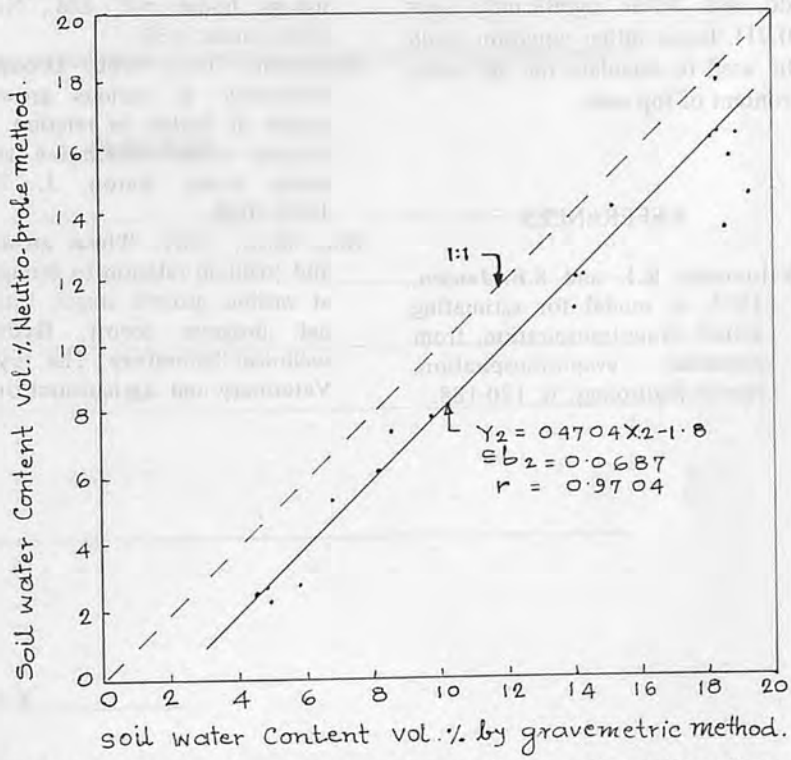

Fig. 1 Relationship between Soil Water Content Determined by Neutron-Probe and Gravimetric Methods

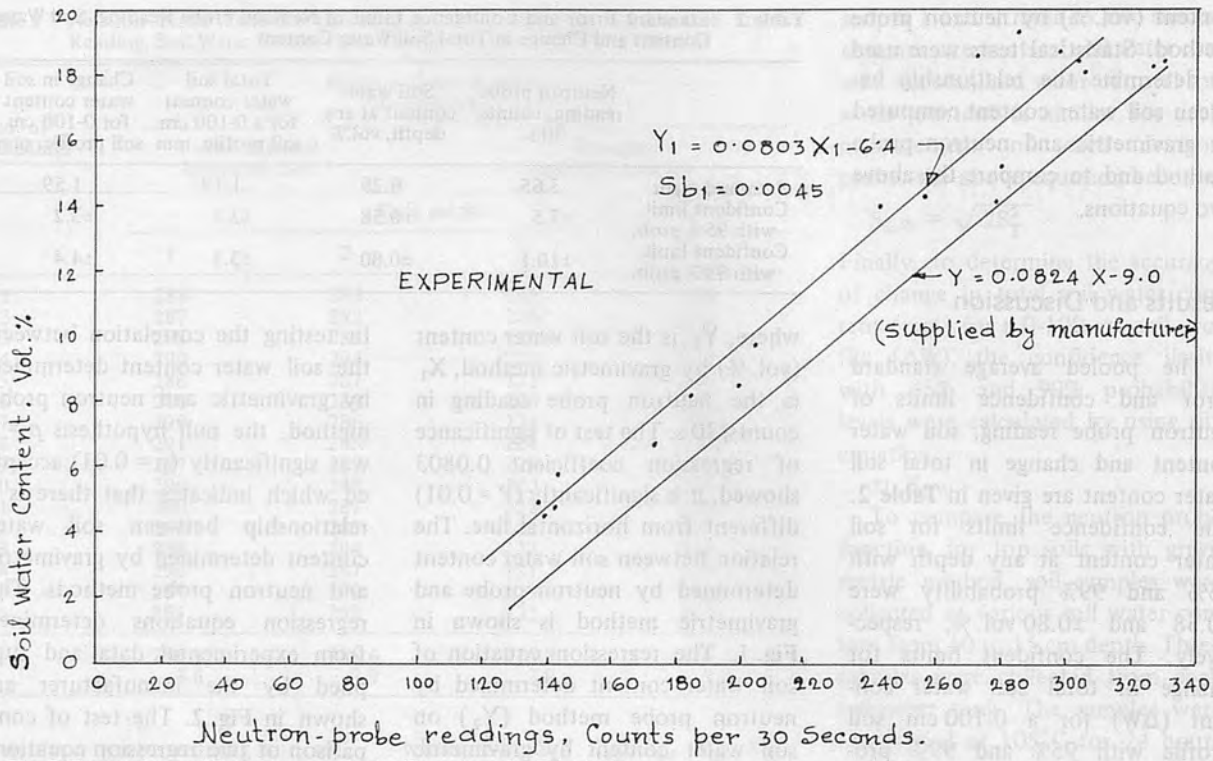

Fig. 2 Comparison of Two Neutron-Probe Functions for Top-Soils

$Y_1 = 0.0803X_1 - 6.4$ indicates that these two equations do not differ significantly ($p = 0.01$), hence either equation could be used to calculate the soil water content of top soils.

REFERENCES

Kristensen, K.J. and S.E. Jensen, 1975. A model for estimating actual evapotranspiration from potential evapotranspiration. Nordic Hydrology, 6: 170-188.

Michael, A.M., 1978. Irrigation Theory and Practice, Vikas publishing house pvt. Ltd., New Dehli, India, p.80.

Mogensen, O.V., 1980. Drought sensitivity at various growth stages of barley in relation to relative evapotranspiration and water stress. Agron. J. 72: 1033-1038.

Rab, M.A., 1981. Wheat growth and yield in relation to drought at various growth stages. Internal progress report, Hydrotechnical laboratory. The royal Veterinary and Agricultural University, Copenhagen, Denmark.

Snedecor, G.W. and W.G. Cochran, 1978. Statistical Methods, Sixth edition. The Iowa State University Press, Ames, Iowa, USA, p.593.

Talukder, M.S.U., 1981. Optimal irrigation time for wheat with application of limited quantities of water. Internal Report, Hydrotechnical laboratory, The Royal Veterinary and Agricultural University, Copenhagen, Denmark. ■■

1971-80 AMA Abstracts and Index Soon Available

As the AMA enters its 13th year of publication this year, the Editorial Staff deemed it appropriate to commemorate the event by publishing "A Decade of AMA Abstracts and Index" which is coming off the press in May, 1983 for only ¥2,000 a copy, including sea mail postage.

During the decade 1971-1980, more than a thousand articles were received by AMA from readers and co-editors. Over 600 of these contributions were published from which the abstracts and index in various aspects of agriculture and agricultural mechanization in developed and developing countries were arranged for use as a handy reference by students, government officials, researchers and academicians interested in agriculture and agricultural mechanization. For example, at a glance, the abstract and index tell about the content of the article, author and AMA issue number. The publication form is A4 size (18.5 cm x 21 cm) 75 pages.

A limited number of copies will be available by May, 1983 for which reason they will be sold on a first-come, first-served basis. In order that interested readers get their copies of the publication, it will be very useful for them (and convenient for the AMA Staff) to fill up the order form below and mail it to –

The Farm Machinery Industrial Research, Corp.
7,2-chome, Kanda, Nishikicho, Chiyoda-ku
Tokyo 101, Japan

☆☆

Order Form

Name: ______________________________

Firm: ______________________________

Designation: ______________________________

Address: ______________________________

Number of copies ordered: ______________________________

(Check one)

☐ Please invoice me/us.

☐ I/We enclose remittance for ¥ __________

STAMP

FARM MACHINERY INDUSTRIAL RESEARCH CORP.

7, 2-CHOME, KANDA NISHIKICHO, CHIYODA-KU
TOKYO, 101 JAPAN

1st FOLD HERE

2nd FOLD HERE

SUBSCRIPTION/ORDER FORM

AGRICULTURAL MECHANIZATION IN ASIA, AFRICA AND LATIN AMERICA (AMA)

Issued Quarterly

Subscription Rate (includes surface mail postage)

Annual (4 issues) ----------¥.6,000
Single copy ----------¥.1,700

Back Issues (1971−75, ¥.2,000 per copy)
(1976−77, ¥.1,200 per copy)
(1978−80, ¥.1,500 per copy)

☐Spring, 1971	☐Vol.7 No.2, Spring, 1976	☐Vol.9 No.4, Autumn, 1978
☐Vol.2 Autumn, 1971	☐Vol.7 No.3, Summer, 1976	☐Vol.10 No.1, Winter, 1979
☐Vol.3 No.1, 1972	☐Vol.7 No.4, Autumn, 1976	☐Vol.10 No.2, Spring, 1979
☐Vol.3 No.2, Summer, 1972	☐Vol.8 No.1, Winter, 1977	☐Vol.10 No.3, Summer, 1979
☐Vol.4 No.1, Spring, 1973	☐Vol.8 No.2, Spring, 1977	☐Vol.10 No.4, Autumn, 1979
☐Vol.4 No.2, Autumn, 1973	☐Vol.8 No.3, Summer, 1977	☐Vol.11 No.1, Winter, 1980
☐Vol.5 No.1, Summer, 1974	☐Vol.8 No.4, Autumn, 1977	☐Vol.11 No.2, Spring, 1980
☐Vol.6 No.1, Spring, 1975	☐Vol.9 No.1, Winter, 1978	☐Vol.11 No.3, Summer, 1980
☐Vol.6 No.2; Autumn, 1975	☐Vol.9 No.2, Spring, 1978	☐Vol.11 No.4, Autumn, 1980
☐Vol.7 No.1, Winter, 1976	☐Vol.9 No.3, Summer, 1978	

(Check issues and number of copies you wish to order)

Back Issues from 1981, ¥.1,700 per copy

Vol._____ No._____, _____ 19____, _____ copy/copies

(check one)

☐ Please invoice me/us

☐ I/We enclose remittance for ¥_____

****

Name: _____

Firm: _____

Position: _____

Address: _____

(block letters)

FARM MACHINERY INDUSTRIAL RESEARCH CORP.

7, 2-chome, Kanda Nishikicho, Chiyoda-ku,

Tokyo 101 Japan

Tel. (03)−291−3671~4, 5718

STAMP

FARM MACHINERY INDUSTRIAL RESEARCH CORP.

7, 2-CHOME, KANDA NISHIKICHO, CHIYODA-KU

TOKYO, 101 JAPAN

1st FOLD HERE

2nd FOLD HERE

Pneumatic Separator for Various Rice Fractions

by
P.K. Chattopadhyay
Assistant Professor
Post Harvest Technology Centre
Indian Institute of Technology
Kharagpur 721302, India

Prem Chand
Professor
Mechanical Engineering Department
Indian Institute of Technology
Kharagpur 731302, India

T.C. Mishra
Ex Graduate Student
Post Harvest Technology Centre
Indian Institute of Technology
Kharagpur 731302, India

N.D. Patil
Ex Grduate Student
Post Harvest Technology Centre
Indian Institute of Tehcnology
Kharagpur 731302, India

Introduction

Rice is the main cereal crop in India having the largest acreage (24% of the total cropped area) under it. India produces about 68 million t of rice annually. Approximate recoveries of the various products are 20% husk, 6 to 8% bran, 2% germ (embryo) and 70 to 72% milled rice.

The bran obtained in the modern rice mills after polishing the brown rice is mixed with germs and some fine broken rice particles. The effective separation of all these fractions is extremely important as the impurities pose many technical difficulties during the oil extraction from bran having 15 to 25% oil.

At present rice mills are not equipped with a separation device except sieving device where germs and brokens of almost similar sizes cannot be separated with the use of sieves. As such, germs which could otherwise be used for oil extraction and baby food preparations go with the brokens. In other words, germs containing about 25 to 30% oil and vitamins still remain under-utilized.

Various kinds of separators for different biological as well as other materials are available. Bolz, Subinskii, Gaudin, Gordon, Graves, Gregg, Henderson, Meisen, Perry, Rietema, Uhl and Williams have suggested various separation devices. Unfortunately, none of them deal with the special problems encountered in the separation or rice fractions.

In order to achieve separation of any two materials there must be found or produced in the individual units making up the mass some inherent property in relation to which these individual units differ. The fundamental properties commonly utilized in the process of separation are size, shape, length, weight, surface texture, electrical, magnetic and aerodynamic property.

Preliminary investigations indicated that except for the last one, all others might not work satisfactorily either for want of appreciable difference in physical properties or the prohibitive cost of the system involved. The separation based on the difference in the aerodynamic property is affected mainly due to differences in motion of the particles in the air.

The objectives of the work reported in this paper were; i) to determine some physical properties of rice bran, germs and brokens and ii) to develop, test and compare two separators (horizontal and vertical type).

Mixture Properties

Experiments were conducted to determine some physical properties of all the bran fractions (germs and brokens), some of which are listed in **Table 1**. Some of the methods used in determining the physical properties of the fractions are as follows:

Table 1 Physical Properties of Rice Fractions

Item	Unit	Brokens	Germs	Bran
Moisture content	(w.b.)	10.4	8.1	10.33
True density	g/cc	1.503	1.334	1.244
Fineness modulus	–	3.27	2.9755	1.9048
Volume surface mean dia (D_{VS})	cm	0.1082	0.0755	0.0272
Average particle diam. (D_{ave})	cm	0.0990	0.0810	0.0384
Mass mean diam. (D_W)	cm	0.1240	0.080	0.0310
Median diam. (D_{50})	cm	0.1100	0.088	0.0320
Surface area (A_W)				
Differential method	cm^2/g	50.8	81.6	234
Cumulative method	cm^2/g	51.5	83.4	246
Terminal velocity (experimental)	cm/s	405	328	159

Moisture Content – As germs and bran contain oil, they are susceptible to burn at high temperatures. Therefore, moisture boxes containing 10 g sample of bran and germs were kept in the oven at a temperature of 85°C. This temperature was maintained for 24 h, after that, it was raised to 105°C for 1 h. After drying the sample for 25 h, it was taken out from the oven and immediately transferred to the desiccator containing anhydrous calcium chloride so as to allow the absorption of water vapour and to prevent the moisture movement from the surrounding atmosphere. After 15 min, the samples were removed, weighed and the moisture content calculated.

The moisture content of paddy, brokens and husk were determined after keeping the samples for 72 h in a furnace whose temperature was already adjusted to 105 ± 2°C.

Specific Gravity or True Density – The Beckman Model 930 Air Comparison Pycnometer which measures the true volume rapidly and precisely was used. The weight of the sample was obtained beforehand. Thus, knowing the weight and the true volume of the sample, one can easily calculate the specific gravity or true density.

Size – The length (a), width (b) and thickness (c) of the sample were measured with the help of a portable microscope and the equivalent diameter was calculated by the equation

$$\text{Equivalent diameter (d)} = (abc)^{1/3} \quad (1)$$

Another method used for size measurement was sieve analysis. The Tyler's standard sieve set consisting of sieves of sizes BSS No. 6, 7, 8, 10, 14, 18, 20, 22, 25, 36, 44, 52, 300, and pan were used in the differential and cumulative analysis. An analysis was made after placing and measuring the samples collected at different sieves after shaking the stack mechanically in vibrator for 10 min.

Surface Area – Knowing the size of the particle, the surface area can be evaluated approximately, using differential analysis, by the relation

$$A_w = \frac{6\lambda\Delta\phi_1}{\rho_p D_1} + \frac{\rho\lambda\Delta\phi_2}{\rho_p D_2} + \ldots \frac{6\lambda\Delta\phi_n}{\rho_p D_n} = \frac{6\lambda}{\rho_p}\sum_{n=1}^{n}\frac{\Delta\phi_n}{D_n} \quad (2)$$

where the subscripts, 1 . . . . n, refer to the individual screen increments, n is the number of screen; D_n is the arithmetic average of the screen openings through which particle passes and on which it is retained; λ is shape factor; and ϕ_n is mass fraction of the total sample that is retained by screen n.

If cumulative analysis is used, the surface area can be determined by

$$A_w = \frac{6\lambda}{\rho_p}\int_0^{1.0}\frac{d\phi}{D_p} \quad (3)$$

The above integration was conducted graphically.

Average Particle Size – Three different ways were used to determine the average particle size of a mixture of particles.

The volume-surface mean diameter, D_{vs} is defined by

$$D_{vs} = \frac{6\lambda}{A_w \rho_p} \quad (4)$$

The median diameter is that which divides the entire number of particles into two equal populations.

The mass mean diameter is defined by

$$D_w = \int_0^{1.0} D_p \, d\phi \quad (5)$$

From the fineness modulus of mixture, the average particle size of mixture can be calculated by

$$D = 0.0041\,(2)^{F.M.} \quad (6)$$

Where F.M. was calculated by taking the sum of the weight fractions retained above each sieve devided by 100.

Terminal Velocity – The terminal velocity of the particle was estimated by determining the air velocity at which the particle remained suspended in a vertical glass tube through which the air was allowed to flow.

Experimental Set-up

Horizontal Set-up – When two particles having different aerodynamic properties are allowed to move in an expansion chamber, the particle with small terminal velocity travels longer distance than that with larger terminal velocity. Two outlets at suitable points will allow such particles to be deposited.

The details of the horizontal set-up are given in **Fig. 1**. The air required for conveyance of the mixture is supplied by a blower (A) with a capacity of 8.5 m^3/min and is able to develop maximum pressure of 500 mm water gauge. It is driven by a 2 HP motor. The air is supplied to a G.I. pipe of 3.75 cm diam. through a control valve (C). The feed hopper (D) receives the materials from the main hopper and discharges it into the conveyance pipe through the mixing nozzle (E). The mixing nozzle is shown in **Fig. 2** in detail. By this arrangement, the air velocity at the feeding point was increased which created sufficient suction and facilitated the entry of materials from the feed hopper to the main conveyance pipe.

The mixture from the mixing nozzle (E) comes to the expansion chamber (G) which consists of two parts. The top portion is a pipe (30 cm long and 6 cm diam.) which is slotted length-wise at the base after threading the two ends. A trapezoidal hopper was brazed with the cut portion of the pipe. The

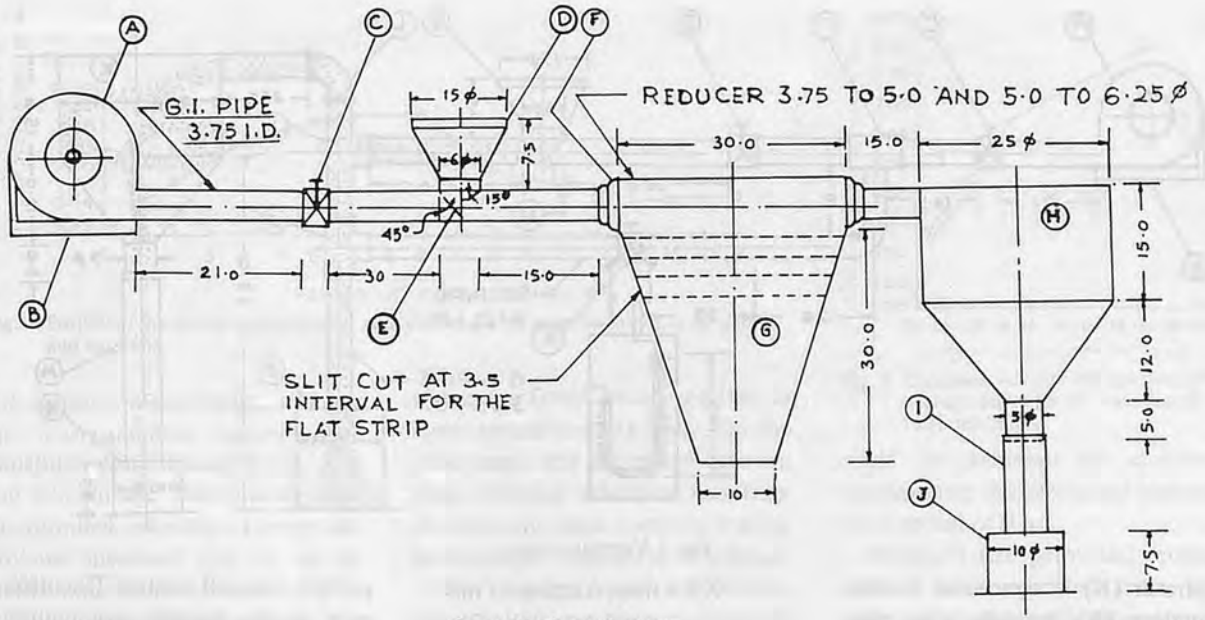

Fig. 1 Horizontal set-up.

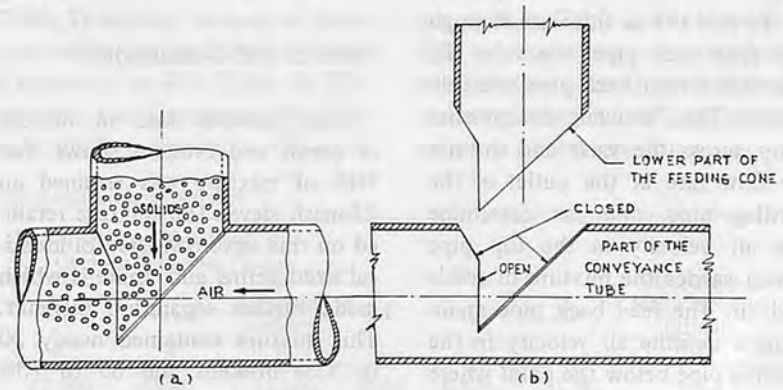

Fig. 2 Mixing nozzle.

pipe was connected to the conveyance pipe by putting two (3.75 to 5 cm and 5 to 6 cm) reducer sockets (F). This is again connected to the cyclone separator (H) which is of 25 cm diam. at the top and conical bottom. The discharge end of the cyclone separator is connected to a container (J) through a hose pipe (I) of 5 cm diam.

Before feeding the materials into the hopper, one blower was started and the velocity in the pipe line was adjusted to approximately 175 cm/s. As the mixture was fed into the hopper it was observed that even the finer particles settled in the expansion chamber. This is due to the large expansion area available in the expansion chamber and reattachment phenomenon. In order to reduce the volume of the expansion chamber, a flat strip (**Fig. 1**) was inserted from one side and the experiment was repeated. This certainly improved the performance. The strip was then kept at various heights and it was found that there was a particular height at which the system gave the best performance. The performance index was calculated after sampling the output from the cyclone separator and expansion chamber. The optimum height was 28.75 cm from base at which the performance index was 31.3%.

Vertical Set-up – When two particles with different aerodynamic properties are pushed into a vertical settling chamber and if the air velocity in the chamber is kept slightly more than the terminal velocity of the higher particle, the lighter particle is carried up in the stream of air whereas the heavier particle falls down in another container. This is the basic principle of the vertical set-up. However, there are many other good features of this set-up. One can set the velocity of air in the settling chamber.

The details of the vertical set-up are shown in **Fig. 3**. The air supply unit (A), the feeding device (G), the gate valve (C), and the cyclone separator (K) are similar to those used in the horizontal set-up. The conveyance pipe consists of 3.75 cm diam. G.I. pipe with a gate valve (D) fitted in the line to control the air flow. This is connected to the settling chamber (G) through a tee joint (I). Another pipe with a valve (E) at the centre is connected across the two ends of the conveyance pipe. The settling chamber (O) is fitted at the bottom of the settling pipe and the other side of the settling pipe is connected to a cyclone separator (K) by a 90° elbow (L). The end of the cyclone

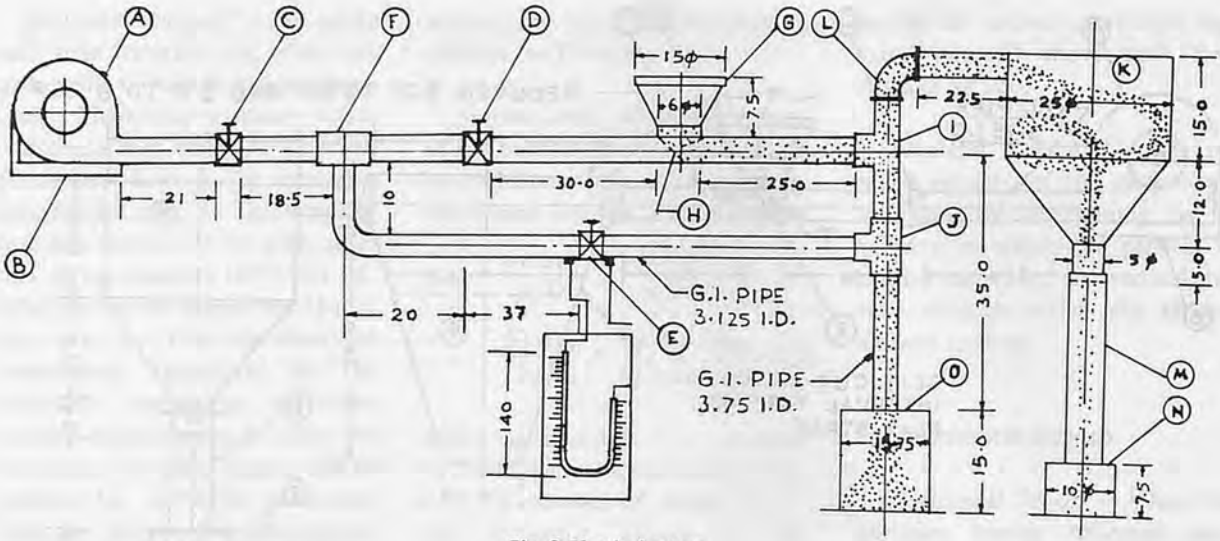

Fig. 3 Vertical set-up.

separator (K) is connected to the container (N) through hose pipe (M).

To find the air flow rate through the feed back pipe, the valve (E) across the feed back pipe was calibrated. Thus knowing the pressure drop across the valve and the net air flow rate at the outlet of the settling pipe, one can determine the air velocity in the top pipe which carries the mixture of solids and air. The feed back pipe maintains a definite air velocity in the settling pipe below the point where the main conveyance pipe meets the settling pipe. Different velocity combinations through valves (D) and (E) were tried. A pilot tube was used to determine the air velocity at the outlet of the settling pipe.

The solids collected in the settling chamber and at the base of cyclone separator were sampled to obtain the amount of individual items on both sides and performance calculated using equations proposed by McCabe according to which

$$E = \frac{(XF\text{-}XB)\,(XD\text{-}XF)\,XD\,(1\text{-}XB)}{(XD\text{-}XB)^2\,(1\text{-}XF)\,XF}$$

where XF = mass fraction of material A in feed

XD = mass fraction of material A in overflow

XB = mass fraction of material A in underflow

Results and Discussions

Sieve analysis data on mixture of germs and brokens shows that 50% of mixture was retained on 25-mesh sieve. The mixture retained on this sieve consisted of identical sized germs and brokens which made further separation difficult. This mixture contained nearly 30 to 35% brokens and 65 to 70% germs. Therefore, for the separation test the samples of germs and brokens mixture were prepared with 35% brokens and the rest germs. In case of bran sieve analysis 60% material was retained on sieves 44 and 52 and nearly 40% was retained in the 100-mesh sieve.

The average particle diameters (D_{ave}) based on the fineness modulus for brokens, germs and bran (**Table 1**) indicate that the average size of brokens was 22% greater than germs whereas the average size of bran particle was 53% less than germs. Median diameters (D_{50}), for brokens, germs and bran (**Table 1**) which divide equally the sample clearly gave an idea that even though the germs and brokens mixture was retained on the 25-mesh sieve, the variation in their particle size still existed. The difference in the particle size reduced the separation efficiency.

The terminal velocities of the brokens, germs and bran were determined both theoretically as well as experimentally. The experimentally determined values were found to vary between 379 and 424 cm/sec for brokens, 326 to 330 cm/sec for germs and 146 to 186 cm/sec for bran, whereas their corresponding theoretically calculated values were 435, 398 and 171 cm/sec, respectively. These differences in the values may be due to the approximate nature of equation used for determining the drag coefficient in the terminal velocity equation. However, the difference is within acceptable limit.

The results of moisture conditioning of the mixture of brokens and germs indicate that an increase in moisture content decreases their specific gravities. The relative difference between their specific gravities was highest at about 9 h of moisture conditioning as shown in **Fig. 4**. The difference between specific gravities of germs and brokens at initial moisture content was 0.169 but increased to 0.1880 during 9 h of moisture conditioing.

The terminal velocities at initial moisture content of germs (8.1%) and brokens (10.4%) were 328 and

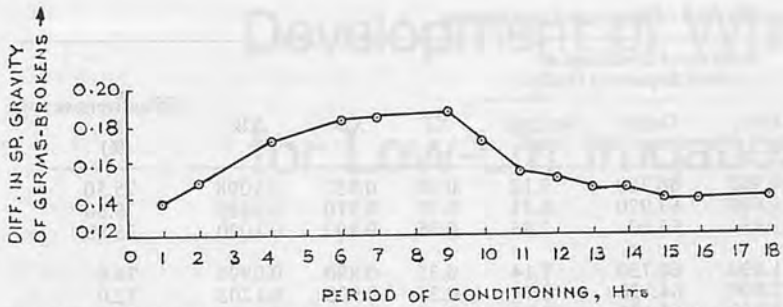

Fig. 4 Period of moisture conditioning and difference in specific gravities of germs and brokens.

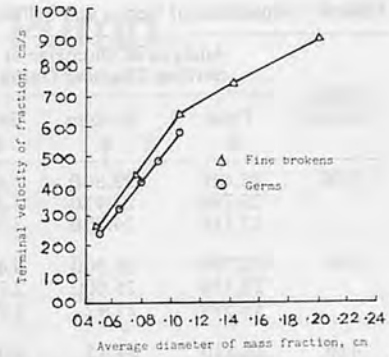

Fig. 5 Terminal velocity of fraction and average diameter of mass fraction (differential).

405 cm/sec, respectively, whereas the corresponding values after moisture conditioning were 362 and 423 cm/sec. This indicates that the terminal velocities of germs and brokens increased due to an increase in moisture content.

The relationship between the terminal velocities of mass fractions of germs and brokens and their corresponding diameters based on the differential sieve analysis is shown in **Fig. 5**. The difference between their terminal velocities was insignificant which resulted in lower separation efficiency. On the other hand, the difference between their terminal velocities was large at higher moisture contents leading to increased separation efficiency.

The average separation efficiency at initial moisture contents of germs and brokens was nearly 67% (**Table 3**) whereas in case of moisture conditioned germs and brokens it increased to 76% (**Table 4**). This indicates that approximately 8 to 10% higher separation efficiency could be achieved by moisture conditioning the germs and brokens for a period of 9 h.

Identical size germ and broken mixture was separated from the bran with pneumatic separator at initial moisture content. The results are given in **Table 2**. The combination of conveyance and feedback velocities was so adjusted that an outlet velocity of 273 cm/sec resulted in a good separation.

Table 2 Separation of Raw Rice Bran from Germs and Brokens Mixture

Outlet velocity cm/sec	Analysis of Discharge of Settling Chamber Outlet: Total g	Germs and brokens g	Bran g	Analysis of Discharge at Cyclone Separator Outlet: Total g	Bran g	Germs and brokens g	XF	XD	XB	Effectiveness McCabe Smith formula (%)
266	30.100	27.900	1.200	67.900	55.80	12.100	0.40	0.926	0.1782	63.2
	29.960	28.000	1.960	68.300	56.30	12.000	0.40	0.936	0.1785	66.7
	28.760	26.600	2.160	68.150	55.10	13.60	0.40	0.925	0.1980	61.8
	27.460	25.700	1.760	71.260	56.96	14.30	0.40	0.936	0.2440	60.8
273	35.100	33.260	1.840	61.450	54.700	6.750	0.40	0.947	0.1100	79.6
	34.160	32.700	1.460	63.040	55.740	7.300	0.40	0.960	0.1160	79.0
	34.740	32.680	2.060	62.040	54.600	7.440	0.40	0.943	0.1266	76.5
	34.360	32.260	2.100	61.890	54.140	7.750	0.40	0.940	0.1255	76.5
279	33.160	29.900	3.260	66.700	56.700	10.000	0.40	0.905	0.1500	71.0
	33.900	29.700	4.200	66.860	55.460	10.40	0.40	0.884	0.1555	72.5
	34.960	31.300	3.660	64.200	55.500	8.70	0.40	0.895	0.1355	73.0
	31.620	29.960	3.660	65.360	55.300	10.06	0.40	0.947	0.1540	71.5

Table 3 Separation of Germs and Brokens Mixture at Initial Moisture Content

Outlet velocity	Analysis of Discharge at Settling Chamber Outlet: Total g	Brokens g	Germs g	Analysis of Discharge at Cyclone Separator Outlet: Total g	Germs g	Brokens g	XF	XD	XB	Effectiveness McCabe Smith formula (%)
330	31.280	25.60	5.680	68.720	59.800	8.92	0.35	0.816	0.1295	67.6
	32.200	26.90	6.200	67.800	59.120	8.68	0.35	0.807	0.1280	67.9
332	30.180	24.40	5.780	69.820	61.320	8.50	0.35	0.810	0.1220	69.0
	32.460	25.96	6.500	67.450	59.220	8.32	0.35	0.800	0.1232	68.2
372	30.220	25.60	4.620	69.780	60.080	9.70	0.35	0.846	0.1390	67.2
	33.860	28.60	5.260	66.140	56.690	9.45	0.35	0.845	0.1428	66.0
376	40.060	31.20	8.860	59.940	52.280	7.66	0.35	0.780	0.1280	64.0
	37.800	28.80	9.000	62.200	53.960	8.24	0.35	0.762	0.1324	65.3

Moisture content (wet base): Germs – 8.1%, Brokens – 10.4%

Table 4 Separation of Germs and Brokens Mixture after 9 h of Moisture Conditioning

Outlet velocity	Analysis of Discharge at Settling Chamber Outlet			Analysis of Discharge at Cyclone Separator Outlet			XF	XD	XB	Effectiveness, E (%)
	Total g	Brokens g	Germs g	Total g	Germs g	Brokens g				
376	25.410	23.800	1.610	74.960	66.780	8.18	0.35	0.937	0.1098	75.50
	25.740	23.420	2.320	74.680	67.970	6.71	0.35	0.910	0.6885	79.80
	27.710	24.700	3.000	73.05	65.60	7.45	0.35	0.892	0.1020	75.80
381	28.700	25.300	3.40	71.890	64.750	7.14	0.35	0.880	0.0993	74.0
	23.730	25.000	2.73	72.890	64.120	8.77	0.35	0.903	0.1203	72.0
	23.340	21.42	1.92	77.310	68.170	9.14	0.35	0.918	0.1180	73.0
416	28.510	24.45	4.06	71.900	63.670	8.23	0.35	0.858	0.0886	77.00
	34.900	30.00	4.90	65.480	60.860	4.62	0.35	0.860	0.0706	80.30
	31.900	27.20	4.70	68.490	62.790	5.70	0.35	0.852	0.0834	77.50
418	36.800	30.70	6.80	63.850	58.650	5.20	0.35	0.815	0.0814	76.3
	23.420	20.80	2.62	77.25	68.250	9.00	0.35	0.889	0.1165	73.0
	25.611	23.00	2.611	75.03	66.690	8.34	0.35	0.890	0.1110	74.2
420	19.360	17.500	1.86	81.310	71.810	9.50	0.35	0.904	0.1170	71.6
	24.400	21.300	3.10	76.170	67.040	9.13	0.35	0.873	0.1200	71.5
	24.600	22.000	2.60	76.050	66.480	9.57	0.35	0.894	0.1256	70.9

The separation of germs from brokens at initial moisture content tests data are tabulated in **Table 3**. The outlet velocity of 332 cm/sec corresponding to the proper combination of conveyance and feedback velocities resulted in highest separation efficiency.

In the case of moisture conditioned germs and brokens, the mixture separation outlet velocity of 416 cm/sec gave the highest separation efficiency as shown in **Table 4**.

Of the two separators fabricated, the performance of the vertical type was far better than that of the horizontal type. This is due to the fact that there is a possibility of improvement in the fabrication of the horizontal set-up. Moreover, there are many flexibilities for controlling the air velocity in the vertical set-up.

In the vertical set-up, there are two valves: one in the main conveyance pipe and other in the feed back pipe to control the air velocities. The main purpose of the feed back pipe is to provide a uniform air velocity in the vertical pipe. However, this velocity should not be so much as to carry even the brokens to the cyclone separator end and should not be so low that the germs also get deposited in the settling chamber.

It is obvious that complete separation is impossible in one stage because of dispersion in size of the particles. However, the performance tests appear to give very encouraging results to think of a prototype on similar lines.

REFERENCES

1. Bolz, H.A.; Hagemann, G.E. Material Handling Hand Book, Ronald Press Co., N.Y., 1958.
2. Dubinskii, M.G. Theor. Foundations in Chemical Engg., 1968, 2, 79.
3. Gaudin, A.M. Principles of Mineral Dressing, Tata McGraw Hill Pub. Co. Ltd. Bombay, 1972.
4. Gordon, G.; Peisakhov, I. Dust Collection and Gas Cleaning, MIR Pub., Moscow, 1972.
5. Graves, R.A. Reichert Cone Separator and Australian Innovation, Aust. Mining Congr. J., 1973, 59, 24.
6. Gress, B.R.; Law, A.G.; Virdi, S.S.; Ballis, J.S. Seed Processing, Mississipi State University, 1970.
7. Henderson, S.M.; Perry, R.L. Agricultural Process Engineering, Second Edition, 1968.
8. Meisen, A. The Separation of Micron Size Particles From Air by Diffusion Process. The Canadian J. of Chem. Engg., 1971, 49, 449.
9. Perry, R.H. Chemical Engrs' Hand Book, International Students Edition, 1972.
10. Rietema, K.; Verver, C.G. Cyclones in Industry, Elsevier Pub. Co., 1961.
11. Uhl, J.B.; Lamp, B.J. Pneumatic separation of grain and straw mixtures. Trans. ASAE 9 (2) 1966, 244.
12. Williams, J.C. Course notes on Particle Size Measurement and Surface Area Determination, Post Graduate School of Powder Tech., University of Bradford, 1971.
13. McCabe, W.L.; Smith, J.C. Unit Operation of Chemical Engg. McGraw Hill Book Co., 1956.

Development of Wheel Pump for Low-Lift Irrigation

by
Choudhury Md. Amiruddin Khan
Assistant Professor
Department of Irrigation and Water Management
Bangladesh Agricultural University
Mymensingh, Bangladesh

Abstract

A manually operated wheel pump of 5 different sizes were developed at the Bangladesh Agricultural University for low-lift irrigation. The sizes were 8.9, 9.3, 10.8, 12.0 and 13.0 cm. The pumps were tested at different suction lifts of up to 5.48 m. The discharge capacities of the smallest and the largest sizes ranged from 21.1 to 74.7 and 44.0 to 137.4 ℓ/min, respectively, at suction lifts of 1.29 to 5.48 m. The capacities of the remaining sizes were in between these two ranges. The power required for operation were within the range of power that can be developed by a healthy man. The pump is simple and cheap, and can be fabricated locally. It is suitable for small and fragmented land holdings.

Introduction

The development of irrigation facilities for meeting the water needs of crops growing during the dry season is crucial in Bangladesh if grain production is to be substantially increased. At present, only about 15% of the cultivable land in the country is supplied with irrigation water using both modern and traditional techniques with a view to meeting full or partial water demand. Sixty percent of the total irrigated land in the country is supplied with irrigation water by manual pumping devices from surface of underground sources of water. On the basis of the manufacturing facilities, cost, socio-economic conditions of farmers, availability of spare parts, repair and maintenance facilities and sources of water, manually operated low-lifting devices are still considered as the main machines for irrigation.

Large-capacity, deep and shallow tubewells now used in Bangladesh are very expensive and they become frequently inoperative due to scarcity of fuel supply, spare parts and sudden mechanical disorders. In most cases, the irrigation coverage is very low and is far from expectation. Several factors such as failure of pumps, poor maintenance of water distribution system, poor location of pump and inefficient layout of canals, absence of water controlling and measuring devices, inadequate servicing system, non-availability of spare parts and socio-economic problems of farmers are associated with the low-irrigation coverage of these modern pumps (Bhuiyan, 1977). Moreover, the cost of production per unit area is increasing day by day with the rise of fuel and oil prices.

In order to overcome the difficulties associated with the modern pumps, several organizations directed their efforts at developing low cost manually operated pumps. The Rangpur-Dinajpur Rehabilitation Service (RDRS) introduced a pump discharging 13,608 ℓ/h of water, but the lift was only 1 m. Since the pump is made of wood, its life is short. The Bangladesh Rice Research Institute (BRRI) developed a two-man operated diaphragm pump. It requires 0.32 to 0.54 HP. for operating the pump at suction lifts 0.91 to 6.09 m (Baqui, 1980). A healthy person can develop only 0.10 HP. So, it is sometimes very difficult for the two men to operate the pump concinuously for a long time.

Considering the lift, discharge capacities, cost, ease of operation, and durabilities of the pumps so far developed, the project was undertaken to minimize these defects and to develop a pump suitable for Bangladesh farmers.

Acknowledgement: The author is particularly indebted to the Bangladesh Agricultural Research Council (BARC) for funding the project and to Dr. M.A. Mannan, Member Director (S&I), BARC for his continuous encouragement and suggestions.

The Model

Wheel pump of 5 different sizes were made: 8.9, 9.3, 10.8, 12 and 13 cm. The size indicates the diameter of the cylinder used. A sectional view of 10.8 cm wheel pump is shown in **Fig. 1**. A and B are two cylinders resting on a concrete block and are connected by means of 3.8 cm PVC pipe. An outlet is fitted in the connecting pipe. Two check valves C and D are placed at the bottom of the cylinders E and F and two plungers connected with the crank-shaft by means of connecting rods G and H. The crank-shaft provides two steps. The length of each step is 11.4 cm and thus the stroke length becomes 22.8 cm. The two ends of the shaft are introduced into two ball bearings and fitted with wooden supports. A wheel of 56 cm diameter is welded with one end of the shaft. A handle is fixed with the wheel.

In fabrication, more attention was given to reducing the cost. As such the cylinders of two different materials were used for comparing the cost. The PVC cylinder was used in 8.9, 10.8 and 13 cm wheel pumps, while galvanized iron sheet were used in the others. Similar type of plunger as used in No. 6 hand pump were used in 8.9 and 9.3 cm wheel pumps. For the other pumps, a special type of plunger was used in order to reduce the cost. The plunger was made by using a piece of 16 gauge metal sheet and a piece of leather. The diameters of the sheet and leather were made almost equal to the inside diameter of the cylinder. After perforating the sheet a connected rod was welded with it and then the piece of leather was placed on the top side of the sheet. Three different types of outlet were used (**Figs. 2 to 4**).

Operation

The operation of the pump is simple. **Figs. 2 to 4** show the actual operating features. The clockwise or anti-clockwise rotation of the wheel causes the plungers to move inward and outward inside the cylinder. If a plunger moves inward then at the same time the other plunger moves outward and vice-versa. When a plunger moves outward it creates a vacuum in the cylinder and draws water from the sump and water above the plunger discharges through the outlet at the same time. The pump can also be operated by to-and-fro rotation of the wheel as shown in **Fig. 4**.

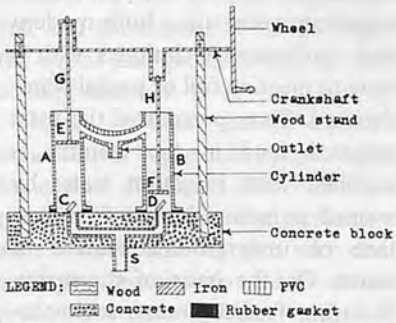

Fig. 1 Sectional view of a wheel pump (10.8 cm diam.)

Fig. 2 Wheel pump (9.3 cm diam.) in operation.

Test of Pumps

All the wheel pumps were tested at different suction lifts. They were placed in the pump test bed with different arrangements suitable for individual pump so as to make it convenient to discharge water into a drum. The system was tested to check any leakage. Time to fill the drum and time loss between two consecutive readings were noted. All pumps were tested at 1.29, 2.07, 2.97, 3.65 and 5.48 m suction lifts. Data gathered from the test are presented in **Table 1**.

Fig. 3 Wheel pump (10.8 cm diam.) in operation.

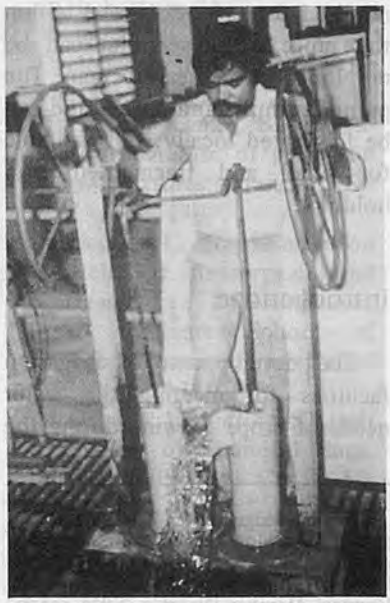

Fig. 4 Wheel pump (13 cm diam.) in operation.

Table 1 Wheel Pump Performance Test Data

Size of wheel pump	Suction Lift (m)	Net Average discharge (ℓ/min)	Average coefficient of discharge	Horse Power required* ($x10^{-1}$)
8.9 cm				
	1.29	74.7	0.85	0.28
	2.07	57.7	0.66	0.29
	2.97	46.8	0.52	0.32
	3.65	38.8	0.44	0.34
	5.48	21.1	0.24	0.35
9.3 cm				
	1.29	79.9	0.87	0.28
	2.07	72.3	0.79	0.38
	2.97	67.2	0.73	0.49
	3.65	65.9	0.71	0.54
	5.48	60.0	0.68	0.79
10.8 cm				
	1.29	108.0	0.85	0.45
	2.07	79.5	0.63	0.44
	2.97	56.0	0.44	0.39
	3.65	43.5	0.34	0.37
	5.48	22.0	0.17	0.29
12.0 cm				
	1.29	114.5	0.86	0.54
	2.07	87.0	0.65	0.51
	2.97	67.0	0.48	0.48
	3.65	51.1	0.38	0.44
	5.48	30.5	0.23	0.39
13.0 cm				
	1.29	137.4	0.87	0.55
	2.07	106.0	0.67	0.56
	2.97	83.3	0.53	0.57
	3.65	70.0	0.44	0.58
	5.48	44.0	0.30	0.60

* Horse power = QH/76, where Q = discharge in litres per second; H = total head in meters = suction lift + head losses due to friction, fittings, bends, and entrance condition.

Results and Discussion

Performance Characteristics – Head-discharge relationship of different pumps were made by plotting the graphs with the net average discharge (ℓ/min) as abscissa and the total head (m) as ordinate (Fig. 5). The average discharge was obtained by dividing the quantity of water discharged during the pumping time. The total head includes the suction lifts and all possible losses of head. The losses of head may occur in a pump due to friction, fittings such as elbow, tee and socket, entrance conditions, bend, enlargement and contraction.

For all pumps, it was observed that there existed an inverse relationship between head and discharge. An increase in total head resulted in a decrease in discharge. The nature of the curve of the wheel pumps is more or less similar except the 9.3 cm wheel pump which shows good result both at lower and higher heads. If the plunger of this type is used in other pumps, similar result can be expected.

Ergonomics of Operation – The time and ease of operation greatly affect the discharge of manual water lifts. The pump should be such that an operator can operate it continuously for a considerable span of time with ease. A healthy person can generate up to 0.10 HP. From Table 1, it is seen that the HP required to drive all wheel pumps are less than 0.10 HP each. During operation it was found that a healthy operator can operate the wheel pumps for a long time continuously without applying much physical effort. This is due to the use of wheel which makes the operation very light. As the flow through the suction pipe is continuous, the inertia of the column of water helps in reducing the total force.

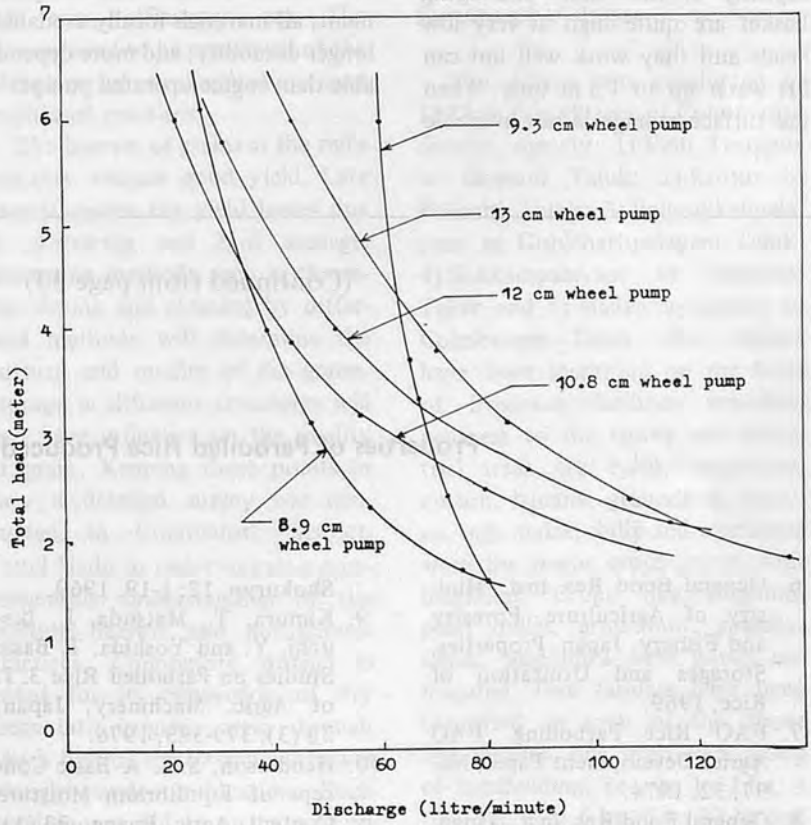

Fig. 5 Head-discharge relationship.

Cost of Operation – In practice, a farmer who operates a small farm looks for the cheapest pump that can provide a satisfactory amount of discharge at different heads and one that hardly requires any maintenance. The estimated manufacturing costs of the wheel pumps studied were: 8.9 cm, Tk 526; 9.3 cm, Tk. 290; 10.8 cm, Tk. 515; 12.0 cm, Tk. 308; and 13.0 cm, Tk. 687.

The 9.3 and 12.0 cm wheel pumps are cheaper. Their cylinders are made of G.I. sheets. The PVC cylinder is expensive and requires such fittings as elbow, socket, tee and PVC sheet. For example, for a 13.0 cm wheel pump, the cost of fittings and cylinders were Tk. 261 and 142, respectively which can be reduced to a great extent if the cylinder were made of G.I. plain sheet.

Suitability – The discharge capacity of the "don" and swing basket are quite high at very low heads and they work well but can lift water up to 1.5 m only. When the surface storage is not available and the lift is more than 1.5 m, the only alternative is to lift the water by means of pumps. The wheel pumps can be used to lift water from both the ground and surface sources.

About 60% of the Bangladesh farmers operate about 3-acre farm each. Their economic conditions limit the use of engine-operated pumps. Moreover, their lands are scattered in various areas due to fragmentation. Therefore, manual water lifts are more practical for their use.

The wheel pump has the following advantages over the engine operated pump: Low investment, low operational and maintenance costs, easy operation and transportation, can be reparied and maintained even by an unskilled farmer, can be owned individually by small farmers, simple to manufacture, farmers can save the operating cost by providing their labour, labour intensive and provides facilities for labour employment, all materials locally available, longer durability, and more dependable than engine operated pumps.

Recommendations

The following are recommended for the improvement of the performance of the wheel pump and for the reduction of the manufacturing cost:

1. Similar type of plunger as used in No. 6 hand pump is recommended for use in wheel pump in order to get high discharges both at lower and higher suction lifts.
2. In order to reduce the manufacturing cost, galvanized plain sheet cylinder should be used.
3. Outlets used in 9.3 and 13.0 cm wheel pump are recommended for use in other pumps.

REFERENCES

1. Baqui, M.A. (1980). Development of diaphragm pump for low-lift irrigation, AMA, Vol. XI, No. 1, pp.43-46.
2. Bhuiyan, S.I. (1977). Evaluation of constraints to efficient water utilization in small scale irrigation schemes in Bangladesh. A paper presented at the Saturday seminar, IRRI, March 19, 1977.

(Continued from page 33)

Properties of Parboiled Rice Produced from . . .

6. General Food Res. Inst., Ministry of Agriculture, Forestry and Fishery, Japan. Properties, Storages and Utilization of Rice, 1969.
7. FAO Rice Parboiling. FAO Agric. Development Paper, No. 97; 32, 1974.
8. General Food Res. Inst., Japan. Rice Starches and Properties. Shokuryo, 12; 1-19, 1969.
9. Kimura, T., Matsuda, J., Ikeuchi, Y. and Yoshida, T. Basic Studies on Parboiled Rice 3. J. of Agric. Machinery, Japan, 38 (3); 379-383, 1976.
10. Henderson, S.M. A Basic Concept of Equilibrium Moisture Content. Agric. Engng., 33 (1); 29-32, 1952.
11. Kimura, T. and Masuda, Y. Equilibrium Moisture Content of Rough Rice Determined by Rapid Method. J. of Soc. Agric. Machinery Kokkaido-Sec., Japan, 20; 90-95, 1979.
12. Hanta, Y. Equilibrium Moisture Content of Rice 1. Proc. Crop Science, Japan, 35; 38-42, 1966.

Survey on Traditional Methods of Harvest and Post-Harvest Practices

by
K. V. Selvaraj
Agronomist
Post-Harvest Technology Scheme
Tamil Nadu Agricultural University
Coimbatore 641003, India

V. Subramanian
Biochemist
International Crops Research Institute for the Semi-Arid Tropics
ICRISAT Patancheru P. O. 502324
Andhra Pradesh, India

Abstract

A survey was conducted in five villages of Coimbatore district (India) to gather information on crop harvest and post-harvest methods followed. The problems faced in harvesting, drying, storage and marketing are enumerated. The possibility of mechanization of various operations and thus minimising the losses of grains is discussed.

Introduction

The breakthrough in crop production during recent years in India reflects the technological development on the farm. The increase in area planted to high yielding varieties was more than proportional to the area under cultivation, particularly for rice (George and Choukidar, 1973). With the increasing intensive agriculture and labour management problems, some operations like harvesting, threshing and drying needs to be more mechanized. Very little micro level data is available on the mechanization in India, which are mostly qualitative in nature. The increased production created a positive demand for efficient harvesting and post-harvest equipments, not excluding the marketing operations. Minimizing the incidence of losses of grain at various stages is important. The post-harvest losses account for 9.33% (Neelakanta, 1972), which involve both qualitative and quantitative losses. It is important to identify the deficiencies and suitable technology be involved for minimizing such losses. The use of machinery by farmers for the above operations rest on several factors like cost, efficiency, etc. The farmers need to be convinced of the advantage of mechanization over traditional practices.

The harvest of grains at the right maturity ensures good yield. Late harvest causes the yield losses due to shattering and bird damage. Processing methods such as threshing, drying and cleaning by different methods will determine the outturn and quality of the grains. Storage in different structures will also have influence on the quality of grain. Keeping these points in view a detailed survey was conducted in Coimbatore district, Tamil Nadu in order to gain a comprehensive understanding of the existing harvest and post-harvest practices. Coimbatore district is noted for its conversion of dry areas into irrigable areas through which half of the district's area was brought under cultivation. Such development led to an increase in the cotton-based industry in the district as well as in the state of Tamil Nadu. The survey was aimed at collection of information on post-harvest methods that are being followed in the villages and to suggest the possibility of improvement with advanced technology, including mechanization of the operations.

Survey of Villages

The survey was conducted in 1977 in five villages of Coimbatore district, namely; 1) Velli Tiruppur in Bhavani Taluk; 2) Kottur in Pollachi Taluk; 3) Polavakkalipalayam in Gobichettipalayam Taluk, 4) Sukkampalayam in Palladam Taluk and 5) Madvarrayapuram in Coimbatore Taluk. The villages have been identified on the basis of irrigation facilities available, nearness to the towns and industrial areas, etc. Paddy, sugarcane, cotton, banana, groundnut, tobacco, ragi, maize, chilly and vegetables were the major crops grown with irrigation. Crops like sorghum, pearl millet, groundnut, gingelly, samai, pigeonpea were grown unirrigated. Five farmers have been identified in each of the above five villages, one from each group of landholding, i.e., up to 1 ha, 1 to 2 ha, 2 to 5 ha, 5 to 10 ha and above 10 ha. In each village, infor-

mation on the total geographical area, cultivated area, major crops grown, area under irrigation, number of wells and other irrigation sources for farming etc. have been gathered using a standard questionnaire. Besides, information on post harvest practices such as stage of harvest and harvesting method, drying to desired moisture level and method of drying, threshing method and its efficiency, storage method and its duration and markting through local village market or through marketing societies were also gathered.

Discussion

Based on the information collected from the survey, a classification of farm holdings, with their limitations, etc. is given below.

Holdings less than 1 ha – There is no uniformity in the crops grown by the farmers in various villages. Farmers grow crops according to their choice, resource and available irrigation facilities. Most of the farmers under this category own mainly drylands and, therefore, their net annual income is also low, ranging from US$70 to US$148.

Holdings 1-2 ha – In this category, the farmers raise long term crops such as sugarcane and turmeric. Almost all the farmers are served by good irrigation facilities and the wells are fitted with electric motor pumps. In this group the annual income realized by the farmers from the land is higher than the small holdings: from US$ 380 to US$670.

Holdings 2-5 ha 5-10 ha and above – The farmers in this category grow remunerative crops like cotton, groundnut, sugarcane, turmeric, tobacco and fodder sorghum, maize, etc. Two farmers were cultivating cut flowers (Crossandra). Since market facilities are available for them they are able to sell the product easily. Though growing flowers is highly remunerative, all the farmers cannot adopt flowers cultivation due to lack of marketing facilities. Two farmers were raising vegetables such as tomato and brinjal. The vegetables are required to be disposed off to the market within a short period and the transport to the daily market is an important problem at times. The total net annual income realized by the above category of farmer ranges from $445 to $1 520, $540 to $1 710 and $635 to $ 2 910 in the case of holdings 2-5, 5-10 ha and above, depending upon the proportion of irrigated and unirrigated lands they cultivate.

Use of Machinery for Crop Cultivation

In each area, crops were cultivated based on the suitability of the soil and agroclimatic conditions, availability of irrigation water, etc. The farmers also give consideration for the anticipated market price, besides the other factors mentioned above. The labour availability during peak cropping seasons is one of the main constraints. Therefore, sometimes changes in the cropping pattern are followed by cultivating crops such as tapioca, banana, etc. which require less labour. Even though irrigation facilities are available, and the short-term crops such as paddy, groundnut, maize etc., are considered to be remunerative, growing such crops leads to poor income due to the high labour input and expenditure on pest management.

Tractors and other agricultural machinery, even if available in the village on hire-basis, are not fully utilized. The farmers prefer to use their own work animals for all the agricultural operations. Distance from the town or national highway has no perceptible influence on the farmers. With regard to the use of machinery as a labour saving device the farmers are prepared to face even the acute labour scarcity instead of using big machinery requiring large capital investment. The farmers still use only the traditional implements. Usually the labourers bring their own tools for field operations.

It is interesting to note that of the 25 farmers contacted in the different villages, all but one of the farmers had electric motor pump sets.

The farmers who possess large holding engage tractors for ploughing and puddling garden lands and wetlands. Plant protection equipments such as sprayers and dusters are invariably used by all the farmers to spray and dust plant protection chemicals. Normally the cotton growing farmers own power sprayers and the other engage sprayers and dusters on hire basis. One or two large farmers use even the groudnut digger, hand operated groundnut sheller and chaff cutter in their farms.

Harvest and Post-Harvest Operations

In general, all the crops are harvested after the grains are dried in the field. This leads to shattering of grains are at harvest. Harvesting of paddy, sorghum, millet etc. is mostly done manually using sickles. After harvest, threshing also is done within a day or two later. Normally threshing of paddy is carried out by beating the sheaves with hand followed by making the farm animals (bullocks) to walk over, so that all grains are removed from the sheaves. Then the grain is winnowed and dried to the desired moisture level. In crops like ragi, pearl millet, maize and sorghum, the earheads are removed and

dried in the sun for 3-4 days. After adequate drying, the earheads are threshed. Many farmers hire LCT threshers since the use of cattle and human labourers for threshing and winnowing consumes more time and labour.

The cleaned product are dried and marketed. Samai (Panicum miliare) and horsegram are harvested as it is (with the whole plant) and heaped for about 10 to 15 days in the threshing yard. This allows little after-ripening of grain and then dried in the sun to the desired moisture for marketing.

Only for the two crops (chilly and turmeric), do farmers find some difficulty for drying since the product have to be dried for 8 to 12 days. High humid condition and rainy or cloudy days cause hindrance in the drying operation. Under such situations, the farmers feel the need for mechanical drying. However, they do not have the intention of buying a drier with high initial investment since the machinery may be kept unused during most part of the year. Sun drying is the general practice adopted for drying all the crops. The cost of sun drying per hectare of product (1 500 to 5 000 kg/ha) ranged from $1.5 to $3.1 for all the crops except for turmeric and chilly wherein the cost of drying goes up to $15 and $10, respectively.

Storage

Most of the farmers market their grains immediately after drying. Only a few farmers, store the product like tobacco, cotton, etc., which are sold when the market price is good. Normally the farmers store these product in a room (part of the house). The grains are normally stored in gunny bags and the usual storage time is about one season.

Marketing Operations

Of the 25 farmers, two have crushed their sugarcane for making jaggery (brown sugar) and are selling in the market. These two farmers incurred loss due to their own crushing, since this operation involved considerable expenditure and the jaggery price in the market was comparatively low in that year.

Almost all the farmers maintain their own bullocks and country carts for transporting materials to the markets. If the commodities like sugarcane, turmeric, etc. require to be transported to distant places, they engage lorry or tractor with trailer for transport. All the agricultural products are sold in the local weekly market (shandy) except crops like tobacco, cotton and turmeric.

Conclusions

The survey is aimed at identifying the problems of harvest and post-harvest practices. The information gathered will be useful for micro-level planning in various parts of India so that efforts can be made to adopt appropriate technology that will be within the reach of the farmers. In India adoption of modern techniques has been inadequate and post-harvest losses are substantial every year (Pingale, 1971). It is necessary to introduce mechanization for the various operations, which can be developed depending on the requirements to suit the conditions of the farmers. For handling these operations, help from the local cooperative societies or agro-industries corporation may be sought by the farmers for providing services at reduced cost. Thus to match with increase in production of food grains, harvest and post-harvest operations needs to be considered very important, as 'A grain saved is a grain produced'.

REFERENCE

1. George, P.S. and Choukidar, V.V. (1973). Dynamics of the paddy-rice system in India. CMA Monograph No. 42, Indian Institute of Management, Ahmedabad.
2. Neelakanta, J. (1972). Post-harvest technology of food grains-problems and perspective. Proceedings of the Seminar on Post-harvest technology of cereals and pulses, New Delhi, pp.22-25.
3. Pingale, S.V. (1971). Scientific storage of food grains. Proceedings of the Symposium on Science and India's Food Problem. Indian Council of Agricultural Research, New Delhi, pp.456-60.

Status of Selected Tillage Implements on Progressive Farms in Pakistan

by
Muhammad Afzal
Seniror Research Officer
Agricultural Machinery Division
National Agricultural Research Centre
P.O. National Institute of Health
Islamabad, Pakistan

Usman Mustafa
Research Officer
Agricultural Machinery Division
National Agricultural Research Centre
P.O. National Institute of Health
Islamabad, Pakistan

Tanvir Ahmad
Research Officer
Agricultural Machinery Division
National Agricultural Research Centre
P.O. National Institute of Health
Islamabad, Pakistan

Abstract

A survey of progressive farms was conducted in early 1982 in three provinces of Pakistan (Punjab, Sind and Baluchistan) about the status of tillage implements. The results indicate the farmers' lack of knowledge and poor possession of the implements. The knowledge and possession were in linear correlation (r=0.52). High price, poor cost-benefit ratio, lack of extension efforts and farmers' lack of initiative were the major reasons responsible for not owning major tillage implements except for the spring loaded tine cultivators which were in abundance. The disc harrow was the most common implement possessed by 63% of the farmers and knowledge about rotary cultivator was the highest (84%) whether or not available with them.

Introduction

Tillage is of prime importance which has direct influence on crop yields. Tillage required 86.3% of tractor hours in Sind Province against 3.03% on sowing and 10.6% on harvesting and threshing on progressive farms[1]. Conventional tillage also required higher tractor power and energy. Moreover, a variety of tillage implements and their combinations existed to obtain a desired seed bed.

Due to lack of research done in the past on the optimum use of tillage implements on different soils, climatic conditions and crops, there appeared to be a lack of knowledge on the proper use of tillage implements in Pakistan. This view has also been expressed by Chaudhary[2] et al and Clarke[3] in their reports.

A questionnaire on some basic aspects of tillage implements was also included in an on-going extensive survey on agricultural mechanization. The questionnaire was aimed at tractor owners (progressive farmers) who were randomly selected in three provinces, excluding North West Frontier Province. A total of 19 progressive farmers (10 from Punjab, 7 from Sind and 2 from Baluchistan), in addition to other farmers included in the major survey, were interviewed at their farms. The main objectives of the survey were to ascertain the possession of implements, farmers' knowledge about them, preference and undesirability towards, especially, tine type cultivator which is common.

Results and Discussions

The overall results of the survey are summarized under subheads: possession and knowledge of tillage implements, farmers not possessing all or any of the five selected implements, farmers response for lack of owning implements, and reasons for not owning implements.

About 63% of the progressive farmers interviewed owned disc harrow, 42% owned ploughs (mould board and disc plow), 32% rotary cultivator and 26% subsoiler.

The majority (84%) reported being aware of the benefits of using the rotary cultivator; 79% were familiar with the disc-harrow and

Table 1 Percentage Distribution of Farmers' Possession and Knowledge of Five Selected Implements.

Implements	Possession		Knowledge	
	Nos.	Percent	Nos.	Percent
Mould board plough	(8)	42.1	(15)	78.9
Disc plough	(8)	42.1	(12)	63.1
Disc harrow	(12)	63.1	(15)	78.9
Rotary cultivator	(6)	31.6	(16)	84.2
Sub-soiler	(5)	26.3	(12)	63.1
Average	(4)	21.0	(11)	57.9

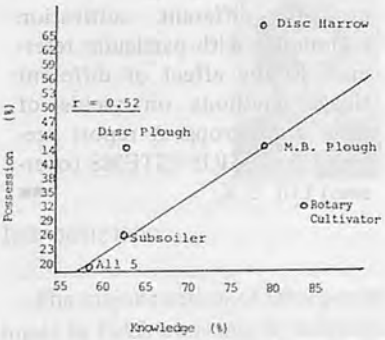

Fig. 1 Scatter diagram and correlation line (knowledge vs possession) for various tillage implements.

mold board plough; and about 60% were knowledgeable about all these farm implements.

A low positive (r = 0.52) linear correlation was found between the knowledge and possession of various tillage implements by the progressive farmers (Fig. 1).

The farmers were asked to pinpoint three out of eleven reasons, due to which they lack possession of implements. Table 2 shows the percentage distribution of the respondent farmers.

Table 3 shows that high price was the major reason (32%) why the farmers did not own any tillage implement. Poor cost-benefit ratio was the next reason in magnitude (18%), while 14% farmers indicated lack of extension services and a similar percentage did not feel the need for owning any implement.

Tine Type Cultivator

Table 4 indicates that the majority of the farmers did not find the tine type cultivator undesirable

Table 2 Farmers' Response for Not Possessing Implements (Reasoning)

No. of Reasons	Percent distribution
No reason	6.7
One reason	33.3
Two reasons	26.7
Three reasons	33.3

Table 3 Percentage of Respondent Farmers Against Reasons for Owning Implements

Reasons	Percent distribution
High price	32.1
Don't provide best cost benefit ratio	17.8
Lack of extension efforts	14.3
Don't need the implement/s	14.3
High power requirements	7.1
Lack of availability	7.1
Lack of familiarity with operation	3.6
Never seen the implement/s	3.6
Lack of marketing efforts	–
Difficult to operate	–
Lack of training to operate	–
Lack of repair and maintenance facilities	–

(53%), 32% gave one reason for its undesirability; 11% two, and 5% advanced three reasons. None of the farmers gave more than three reasons. Fig. 2 illustrates the relationship of reasons and the farmers, i.e., there was a dearth of knowledge on the undesirable features of tine type cultivator. The percentage steadily dropped with the increase in number of reasons.

Table 5 shows that 23% of the farmers pointed mechanical problems while 77% indicated soil related problems.

Table 4 Farmers' Response to the Question on Tine Type Cultivator

Response	Percent distribution	
No reply	42.1	52.6
Don't know	10.5	
One reason	31.6	
Two reasons	10.5	
Three reasons	5.3	
Four reasons	–	

Table 5 Undesirable Features Associated with Tine Type Cultivator

Item	Percent distribution
Mechanical	
Limited depth of operation	15.4
Difficult to penetrate	7.7
	23.1
Soil	
Does not invert the soil	23.1
Does not pulverise the soil	15.4
Does not mix the soil	15.4
Leaves bigger clods	7.7
Creates hard pan	7.7
Soil moisture is lost	7.7
	76.9
Total	100.0

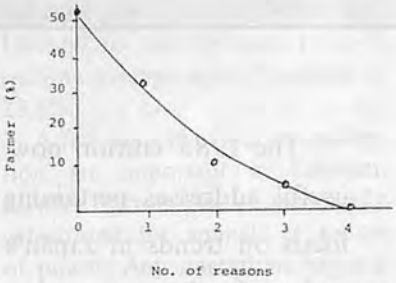

Fig. 2 Reasons advanced by farmers indicating undesirable features of tine type cultivator.

Conclusions

1. The results of the survey show that the possession of tillage implements by progressive farmers was correlated (r = 0.52) to their knowledge of these implements. Thus, an increase in knowledge

might produce a positive effect on their possession by farmers.

2. Only about one-third of the farmers gave the required three reasons for not possessing an implement. On the other hand, the response towards pinpointing the problems with the tine type cultivator was poor, majority of the farmers (53%) gave no reason, while 5% gave three reasons, against the required five reasons. It shows that there was a general lack of knowledge with the farmers about why they owned a tine type cultivator and what they do not possess all or any of the five tillage implements discussed.

High price was a major factor cited by a third of all the farmers for not possessing tillage implements other than cultivators. Poor cost-benefit ratio, lack of extension services, and farmer's lack of initiative to own any were also pointed out by the farmers.

The disc harrow was the most common implement: 63% of the farmers owned it. Their knowledge about the rotary cultivator was highest (81%) of the farmers interviewed.

REFERENCES

1. Devrajani, B.T. 1980. Economics of mechanisation under diversified farming (small and large farms) Proc. of Ist Annual Convention, PSAE.
2. Chaudhary, A.D., Hussain, K.A., Khan, A.S., 1982, comparative study of different mechanised cultivation techniques; A report on ADBP Project. University of Agriculture, Faisalabad.
3. Clarke, L.J., 1981. A National experimental programme to evaluate different cultivation techniques with particular reference to the effect of different tillage methods on yields of food grain crops. A report prepared by AGRISYSTEMS (overseas) Ltd. U.K. ■■

1983 EDITION

FARM MACHINERY YEARBOOK

The 1983 edition now available has 227 pages of the latest comments, statistics and useful addresses pertaining to agricultural mechanization in Japan. The commentaries focus on trends in Japan's agricultural development and agricultural machinery industry and production and results of farm machinery research efforts.

The statistical information pertains to agriculture, in general, and agricultural mechanization, in particular. The yearbook also contains addresses and references of administrative authorities, experiment stations, farm machinery manufacturers and foreign address of use to importers and exporters.

It measures 18.0 cm x 26.5 cm in hard cover and sells for ¥9,300 (sea mail) and ¥11,000 (air mail).

SHIN-NORINSHA Co., Ltd.

7, 2-chome, Kanda Nishikicho, Chiyodaku, Tokyo 101 Japan

Implications of Farm Mechanization for Employment, Productivity and Income

by
Bashir Ahmad
Assistant Professor
Department of Farm Management
University of Agriculture
Faisalabad, Pakistan

Introduction

The major portion of farm power input in Pakistan is met by animals. Animal traction is particularly advantageous in providing the power required for some basic reasons. Firstly, the cost of animals and associated implements is small and within the financial capacity of most of the farmers. Secondly, the majority of Pakistani farmers are small operators and individualistic by nature. A pair of bullocks as traction unit, therefore, suits small holdings in the country. Thirdly, they cost little in terms of foreign exchange. Draught animals are raised locally and the implements drawn by bullocks are also manufactured locally. Fourthly, bullocks are more dependable sources of power as the chances of break down in bullock power are much less than for tractors. Fifthly, comparatively less know-how is required in the maintenance and use of bullocks as compared to tractors.

On the other hand, there are many disadvantages in the use of bullocks for cultivation. Firstly, draft power available from animals is essentially limited. Therefore, the bullocks are comparatively inefficient for farm operations like deep plowing, subsoiling, rotary cultivating, etc. Secondly, many farm operations cannot be timely performed with bullocks such as plowing after rain, sowing of cotton after wheat, sowing of wheat after cotton, etc. Thirdly, there is always an element of wastage of bullock energy which most often is to be used in pairs and has to be fed invariably throughout the year. Fourthly, certain drudgery is also attached to farming with bullocks. Finally, some valuable land has to be wasted for growing fodders as feed for bullocks.

Efforts to intensify agricultural production require the introduction of improved farm equipment as well as an increase in the total availability and utilization of energy or power per unit area. It is often said that tractor cultivation will improve cropping patterns and bring higher yields and cropping intensity through improved soil and seed bed preparation and timely planting than cultivation by bullocks. The tractors are helpful in better soil and water conservation, plowing in green manure more effectively, together with the opportunity they provide to reduce the drudgery of heavy labor. They also provide necessary power for deep plowing, subsoiling and rotary cultivating operations which is usually beyond the capacity of animals. Furthermore, these operations can be performed timely by tractors at high speed which is of critical importance in areas where yields depend on limited and uncertain rainfall.

Due to these and other advantages, the number of tractors increased in the developing countries, especially in the past few years after the green revolution. For example, the tractor population in Pakistan rose from 21,534 units in 1968-69 to 103 029 units 1978-79 with an average annual increase of 23.5%.

A few aspects of tractor cultivation are important in Pakistan. Firstly, tractors can be technically substituted for animals as source of power. Any operations which a tractor with its implements can perform is also feasible by a combination of animal power, animal drawn implements and manual labor. Secondly, by replacing draught animals, tractorisation frees fodder acreage which would otherwise be needed for draught animals. Thirdly, tractor causes displacement of labor as it involves the substitution of capital for labor.

These two techniques of production along with their implements have their own merits and demerits. A few studies have been undertaken

Acknowledgement: The author is grateful to Mr. Muhammad Aslam, Department of Agriculture Economics, for helpful suggestions.

in Pakistan to assess the impact of tractorization of employment, productivity and income. But little up-to-date information is available about the real impact on cropping patterns, labor use, bullock labor input, yields, costs and net benefits to the cultivators on tractor and bullock farms. The present study is an effort in this direction.

Methodology

The study was conducted in the Multan Zone comprising of Multan, Vehari, Bahawalpur, Bahawalnaghar, Rahim Yar Khan and Muzaffargarh districts. The area of this zone is a nearly level plane. The climate is arid, sub-tropical, continental. The summer is very hot and winter is very cold. The mean maximum temperatue is 14° – 43°C and the mean minimum temperature is 5.5° –7°C. The mean annual rainfall is 200 mm. The soil is haplic yermosols type (6).

Sampling

Sampling was not possible because of time and financial constraints in surverying all farms in the Multan zone. The study was, therefore, confined to six villages of Burewala tehsil. These villages represent an average condition for the production of crops. Selection of villages was made after consultation with the agricultural officers and farmers. In all, there were 599 holdings in these villages. A random sample representing 27% of the population was drawn for detailed investigation. In all 150 cases were selected: 134 bullock farms and 16 tractor farms.

Data Collection

For the collection of data, a comprehensive interview schedule was made which was revised after pretesting. Raw data collected were later tabulated and analysed.

Results and Discussion

Cropping Patterns

Table 1 shows the cropping patterns followed on bullock and tractor farms. Food crops, including wheat, rice and maize collectively covered 44.7% and 38.0% on bullock and tractor farms, respectively. Wheat is the principal food crop accounting for 38.4% and 33.6% on these farms. Rice and maize constituted 2.8% and 3.5% on bullock and 2.6% 1.8% on tractor farms.

Both kharif and rabi fodders occupied 18.7% and 11.8% of the total cropped area on bullock and tractor farms respectively.

Cash crops, incluidng cotton, sugarcane and other crops occupied 36.7% and 50.2% of the total cropped area on bullock farms and tractor farms, respectively. Among these, cotton (28.2%) was the most important cash crop followed by sugarcane (7.2%) and other crops (1.4%) on bullock farms. Cotton (32.5%) was also the most important cash crop followed by other crops (14.0%) and sugarcane (3.8%) on tractor farms. Tractor farms were evidently devoting more area to cash crops and less area to food and fodder crops as compared to bullock farms. The results reported by Ali (2) and Ahmad (1) coincide more or less with the findings of the present study.

Table 1 Cropping Patterns for Bullock and Tractor Farms Unit: %

Item	Bullock farm	Tractor farm
Good grains		
Wheat	38.42	33.61
Rice	2.77	2.59
Maize	3.50	1.78
Sub-total	44.69	37.98
Fodders		
Kharif fodder	9.81	6.56
Rabi fodder	8.84	5.24
Sub-total	18.65	11.80
Cash crops		
Cotton	28.15	32.46
Sugarcane	7.15	3.77
Others	1.36	13.99
Sub-toal	36.66	50.22
Grand total:	100.00	100.00

Yield Rates

The yields of major crops achieved on bullock farms and tractor farms are given in **Table 2**. Per acre yields of wheat, rice, maize, cotton and sugarcane on tractor farms were higher than that of bullock farms by 23.6, 14.5, 11.8, 30.69 and 16.7% respectively. Higher yield on tractor farms might be due to greater use of fertilizer and irrigation water as compared to bullock farms in addition to tractorisation.

Fertilizer Use

Table 3 shows the value of fertilizer applied per acre to major crops on bullock and tractor farms. Tractor farms spent 41.5% more per cropped acre than on bullock farms. Fertilizer cost was higher by 10.5 to 67.2% for various crops on tractor farms.

Water Use

The quantity of water applied per acre to different crops is shown

Table 2 Yield per Acre Unit: Maund

Crops	Bullock farms	Tractor farms
Wheat	26.72	33.04
Rice	22.00	25.20
Maize	14.31	16.00
Cotton	9.97	13.03
Sugarcane	348.51	407.02

Table 3 Fetilizer Cost Per Acre on Different Crops Unit: Rupee

Crops	Bullock farms	Tractor farms
Cotton	91.75	119.20
Sugarcane	100.68	111.58
Rice	96.68	130.93
Maize	91.14	152.00
Wheat	132.32	193.74
Kharif fodder	48.87	65.43
Rabi fodder	55.10	78.10
Average per Acre	100.75	142.91

in Table 4. The amount of water applied per acre was higher for all the major crops with the exception of kharif fodder on tractor farms. The overall water use per cropped acre was higher by 10.04% on tractor farms than on bullock farms.

Table 4 Use of Water for Various Crops

Unit: Acre inche

Crops	Bullock Farms			Tractor Farms		
	Canal	Tubewell	Total	Canal	Tubewell	Total
Cotton	13.59	2.70	16.29	12.36	7.38	19.74
Sugarcane	39.84	8.10	47.95	41.01	13.65	54.66
Rice	25.77	6.96	32.37	30.21	23.13	53.34
Maize	16.11	2.73	18.84	16.17	4.26	20.43
Wheat	15.96	3.63	19.59	17.58	6.33	23.91
Kharif fodder	18.12	3.48	21.60	15.60	1.53	17.13
Rabi fodder	37.56	6.99	44.55	40.50	11.25	51.75
Average perAcre	18.91	3.93	22.84	17.87	7.34	25.21

Human Labor

The overall labor employment per cropped acre was 200.7 h and 161.0 h on bullock and tractor farms, respectively (Table 5). Thus, human labor employed by tractor farms on per cropped acre basis is less than that employed by bullock farms by 19.8%. The use of permanent labor (i.e., family labor and permanent hired labor) was 48% less on tractor farms as compared to bullock farms. These results are consistent with the findings of a NCAER study conducted in Andhra Pradesh, Haryana, Panjab and Uttar Pradesh (5). However, the use of casual hired labor was higher by 80.5% on tractor farms than on bullock farms. Similar results were reported by Khlon in Punjab (4). Thus with tractorization the demand for casual hired labor increased while the employment of permanent labor declined in crop production activities.

Table 5 Human Labor Input per Acre for Various Crops

Unit: hour

Crop	Bullock Farms			Tractor Farms		
	Permanent labor	Casual hired labor	Total	Permanent labor	Casual hired labor	Total
Cotton	142.00	65.53	207.53	60.40	131.06	191.46
Sugarcane	526.24	80.34	606.58	580.97	95.28	676.25
Rice	143.03	91.18	234.21	81.93	130.99	212.92
Maize	188.73	15.95	204.68	149.48	18.67	168.15
Wheat	131.39	41.72	173.11	57.04	54.77	111.81
Kharif fodder	66.43	–	66.43	23.34	–	23.34
Rabi fodder	91.31	–	91.31	57.07	–	57.07
Average perAcre	156.47	44.23	200.70	81.12	79.85	160.97

Animal Labor

The per acre animal labour input on bullock and tractor farms is shown in Table 6. The overall employment of draught animals per cropped acre amounted to 66.0 and 9.9 bullock pair hours on bullock farms and tractor farms, respectively. The reduction in the use of draught animals on tractor farms was mainly due to the relatively less need for animal power for plowing, planking and other operations which are mainly performed with tractors on tractor farms. The use of animal labor per acre for various major crops was also lower on tractor farms than bullock farms.

Table 6 Bullock Use per Acre for Various Crops

Unit: Pair hours

Crops	Bullock farms	Tractor farms
Cotton	53.63	4.54
Sugarcane	194.68	166.26
Rice	61.33	6.32
Maize	53.94	2.82
Wheat	70.93	4.11
Kharif fodder	42.13	0.89
Rabi fodder	49.74	6.97
Average per Acre	66.03	8.88

Net Returns

The gross income and total cost per farm acre were higher by 37.5% and 10.3% on tractor farms as compared to bullock farms (Table 7) The net was Rs.329.42 per farm acre on bullock farms and Rs.152.31 on tractor farms. Thus the bullock farms were operating under loss and were covering their variable costs and part of fixed cost of family labour and bullock labour, etc.

Table 7 Net Returns per Farm Acre on Bullock and Tractor Farms

Unit: Rupee

Item	Bullock farms	Tractor farms
Gross income	1 899.80	2 611.29
Costs:		
Labor input	636.88	477.94
Capital input	899.49	1 109.41
Land input	692.85	871.63
Total costs	2 229.22	2 458.98
Net returns	(–) 329.42	152.31

Summary

The study was conducted with a view to making an economic comparison of bullock and tractor farming. For this purpose the Burewala tehsil of the Vehari District was selected. Sixteen tractor farms and 134 bullock farms were selected from six villages for detailed investigation. A comprehensive interview schedule was used for collecting data.

The tractor farms allocated more area to cash crops as compared to bullock farms where food crops (44.5%) and fodder crops (18.7%) were occupying larger areas. The

yield per acre of all the major crops was higher on tractor farms than on bullock farms. Higher yield rates were the result of greater use of water and fertilizer, in addition to tractorisation of these farms.

Total human labor input per cropped acre was less by 19.8% on tractor farms as compared to bullock farms. However, the use of casual hired labor was higher by 80.5% on tractor farms than on bullock farms. The overall employment of draught animals per cropped acre was lower by 91.9% on tractor farms than on bullock farms. The reduction in the use of draught animals on tractor farms was mainly due to lower use of animals power for plowing, planking operations, etc, on these farms.

The gross income and total cost per farm acre were higher by 37.5% and 10.3% on tractor farms as compared to bullock farm. The income was negative (Rs.329.42) on bullock farms but positive (Rs.152.31) on tractor farms.

REFERENCES

1. Ahmad, B. "Bullock Farming Vs. Tractor Farming" Agricultural Mechanization in Asia, Vol.x., No.3, Summer 1979.
2. Ali, S. "Economics of Mechanized Farming Versus Bullock Farming in Lyallpur except Lyallpur Tehsil", M.Sc. Agri., Thesis, WPAU, Lyallpur, 1965.
3. Government of Pakistan "Agricultural Statistics of Pakistan", Ministry of Food, Agricultural and Cooperatives, Food and Agriculture Division Planning Unit, Islamabad, 1979.
4. Kahlon, A.S. "Impact of Mechanization on Punjab Agriculture with Special Reference to Tractorization", Department of Economics and Rural Sociology, Punjab Agricultural University, Ludhiana, India, 1972.
5. National Council of Applied Economic Research. "Implications of Tractorization for Farm Employment Productivity and Income Volume II" Bharat Mudrana Laya, Naveen Shahadara, Dehli-110032, India, 1980.
6. Rafiq, M. "Crop Ecological Zones of Nine Countries of the Near East Region", Food and Agriculture Organization of the United Nations, Rome 1976. ■■

Is your Agricultural Machinery Industry faced with problems of development and growth?

We can provide you with know-how to help your company and industry develop and grow.

Specific Information Service.

Statistics, Product Information, Patents, Test & Research Data, References and Directory.

Survey & Research.

Marketing Research, Forecasting on Economic, Technical, Supply, Demand, etc. and Dealer Search.

System Development.

Design of Developing System on New Products: from Ideas to Marketing.

Consultation.

Policy Making, Management Improvement, New Development of Organizations, Motivation.

Seminars & Meeting.

New Project & Up-to-date Subjects.

Publication Activities.

Basic, Production and Sales Statistics for Agricultural Machinery, etc.

FARM MACHINERY INDUSTRIAL RESEARCH CORP.

7-2 Kanda Nishikicho, Chiyoda-ku, Tokyo, Japan (Tel. 03/291-5717~8, 3671~4)

Performance Study of a Solar Cooker

by
Kedar N. Nag
Dean, College of Technical and Agricultural Engineering
University of Udaipur
Udaipur, India

A.N. Mathur
Research Engineer, College of Technical and Agricultural Engineering
University of Udaipur
Udaipur, India

Abstract

A box-type solar cooker known as 'Udaipur Cooker' with metallised polyester reflector on both sides of box has been fabricated which costs $6.5 less than box-type solar cooker with flat collector sides. The collector of both cookers is made of 24G aluminium sheets painted black. The temperature of Udaipur cooker was 15° to 17° higher than that of the flat side box cooker with and without food material. The maximum temperature during the month of August was 104°C in Udaipur Cooker in comparison with 87.5°C in the box-type cooker.

Introduction

The present energy crises has drawn attention towards the development of non-conventional domestic appliances working on solar energy. Efforts are being made to use solar energy for space heating, cooking, farm processing, drying and water heating purposes. It is now established that this inexhaustible source of energy can meet our demand in domestic sector without adversely effecting our environment. The development of low cost solar cell will also reduce commercial fuel consumption in industrial sector.

In India cooking and water heating consume 43% of the total domestic energy. A recent survey of a rural area of Karnataka State has shown that the domestic sector alone consumes 87% of energy which comprises mostly of fuel wood, cowdung, farm waste and oil. The urban areas of Delhi, Bombay and Calcutta consume 66% commercial energy for domestic use whereas other rural and urban areas consume between 12-19%. It is estimated that with present rate of energy consumption, India's forest resources which are estimated to be 141 million tonnes will disappear before 2000 A.D. Table 1 shows India's energy consumption pattern for the last two decades.

The forest conservation programme has reduced pilferage in fuel wood, reducing its consumption of commercial fuel and farm waste. The national programme on biogas has to a great extent reduced the use of dung cake as fuel in socially well off rural community, which has not increased during the last decade.

In order to reduce the use of commercial fuel in urban areas, the technology to harness part of the solar energy through the use of solar cookers and water heaters has been developed.

Method and Materials

The popularisation of the solar-based domestic equipments will depend on some of the constraints: sociological, technological, political and economical. Normally it takes about a decade to shift from one

Table 1 Energy Requirement in Domestic Sector (Kilo metric ton of coal replacement)

	1960/1	1970/1	1975/6	1980/1
Commercial Energy				
Petroleum products	12.9	28.0	41.0	66.0
Coal and coke	2.8	9.2	20.0	28.0
Electricity	1.5	5.1	8.0	14.0
Sub-total	17.2	42.3	69.0	103.0
Non-Commercial Energy				
Fuel wood and charcoal	95.3	115.7	124.0	125.0
Dung cakes	21.6	24.0	25.0	25.0
Farm waste	29.2	43.0	50.0	59.0
Sub-total	−146.2	182.7	199.0	209.0
Grand total	163.3	255.0	268.0	317.0

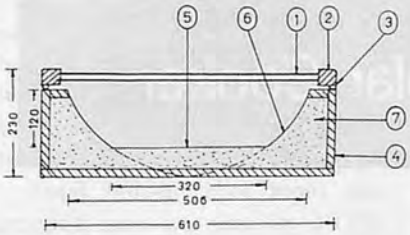

Fig. 1 Udaipur solar cooker (sectional view).

Name of parts: 1–Double glass cover, 2–Top cover, 3–Rubber strip, 4–Outside box, 5–Flat plate collector, 6–Parabolic reflector, 7–Paddy husk.

source of energy to another source. The solar energy has a variety of low-temperature applications and the solar cooker is one of them. It is essentially made of blackened metallic surface called collector with a suitable support and cover. The solar radiations are trapped in closed spaces through a double-glass cover and absorbed by the collector.

The different types of solar cookers developed in India have been tested at the Central Arid Zone Research Institute, Jodhpur and their comparative performance has also been studied. It is reported that the reflector type of cookers are better than simple box type. The conventional box-type cooker with double glass cover attained a temperature of 90°C in winter and 150°C in summer.

The 'Udaipur Cooker' is made of flat plate collector of 24G aluminium sheet coated with black board paint. The metallized polyester film (90% reflectivity) pasted on parabolic hard board have been provided on two side walls to reflect solar radiation on container to increase the heat supply. The focus of parabolic reflector is at the centre of the "Collector". The double glass cover reduces the heat convection losses due to wind velocity. The outer box made of wood is painted with best quality enamel paint. Rubber strip seals are provided at the lid of the cooker. The insulation material provided between the collector surface and outer wooden box checks the back flow of absorbed energy. Rice husk insulation is used.

Results and Discussion

A comparative study of a box-type cooker with black side walls and the Udaipur Cooker was made. The maximum temperature attained in the Udaipur Cooker was 93°C during winter which is 15°C higher than that of identical cooker without reflector (Table 2).

Table 2 Comparative Study of Udaipur Cooker and Box-Type Cooker

Time	Temperature °C		
	Ambient	Box type without myler	Cooker with myler
9 00		18	18
10 00	19.5°C	52	63
11 00	23.0°C	70	87
12 00	24.4°C	76	89
13 00	25.0°C	78	89
14 00	24.6°C	73	84
15 00	25.9°C	64	74
16 00	25.5°C	50	58
17 00	24.9°C	45	51

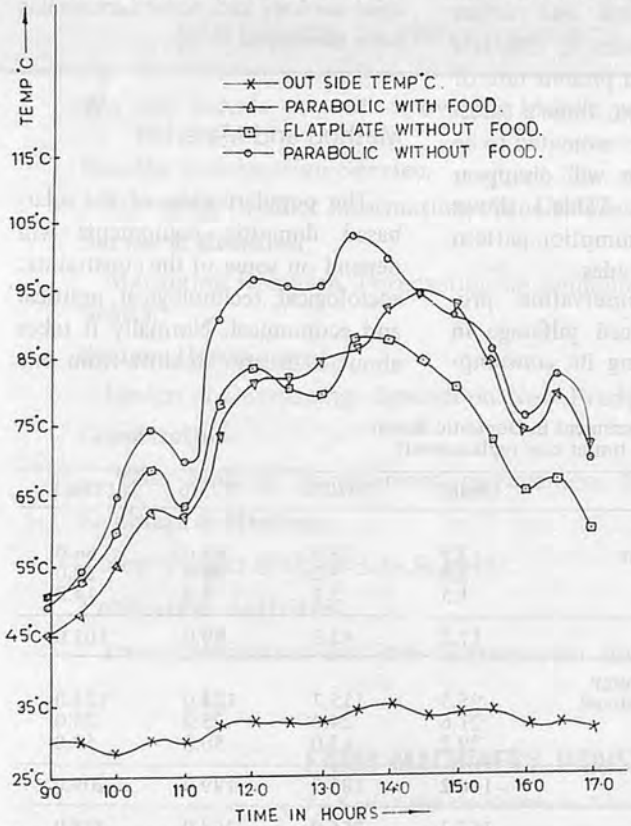

Fig. 2 Performance of solar cookers (without food).

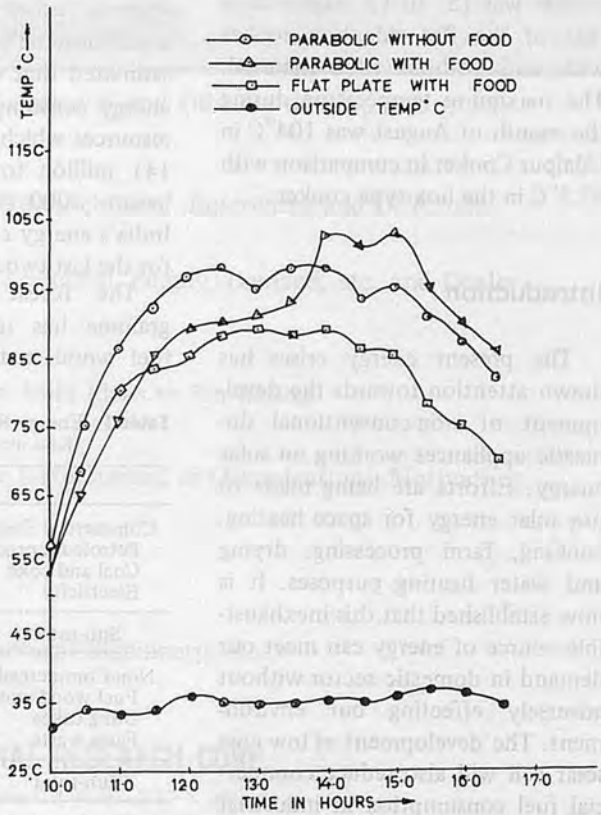

Fig. 3 Performance of both the solar cookers (with food).

Fig. 2 shows that the temperature achieved in August in Udaipur Cooker was 104°C and in box type cooker is 87.5°C at no load.

Table 3 gives the temperature distribution of both cookers with food materials. The temperature of the box type cooker was higher during initial warning period because of heat absorbed by side walls also. The maximum temperature reached with food materials in the box type cooker was 89°C only whereas in the Udaipur Cooker it was 103°C. The temperature reached in the cookers depended on ambient temperature (Fig. 3).

Table 4 shows the temperatures of both cookers with food materials as load. The temperature of the Udaipur Cooker was 8°C higher than flat, side-walled cooker. The maximum difference was 11°C and 17°C observed with and without food materials, respectively.

The quality of food cooked was satisfactory, tasty and nutritionally rich as cooking takes place at low temperature.

The cost of the Udaipur Cooker was $6.5 cheaper than the box type cooker.

Table 3 Comparative Temperature of Two Types of Solar Cookers with Load

Time (h)	Outside (Temp. °C)	Humidity (%)	Parabolic no load (Temp. °C)	Parbolic with load (Temp. °C)	Flat plate with load (Temp. °C)
9 45	29.00	60	50.00	46.00	47.00
10 30	34.50	58	75.00	65.00	68.00
11 30	34.00	55	92.00	85.00	83.00
12 30	35.00	51	98.00	90.00	88.00
13 30	35.00	50	98.00	93.00	88.00
14 30	35.00	49	93.50	101.00	86.00
15 30	37.00	49	91.00	95.00	78.00
16 30	34.50	50	82.00	86.00	70.00

Mean wind velocity: 7.8 kmph; Sunshine hours: 9.4 hrs.

Table 4 Comparative of Temperature of Two Types of Cookers with Load put at 11 am

Time (h)	Outside (Temp. °C)	Humidity (%)	Prarabolic with load (Temp. °C)	Flat plate with load (Temp. °C)	Parabolic no load (Temp. °C)
11.30	31.50	61	72.00	67.00	77.00
12.00	32.50	60	72.00	71.50	85.00
13.00	33.00	56	75.00	68.00	80.00
13.30	32.50	58	70.00	62.00	70.00

Mean wind velocity: 7.5 kmph; Sunshine hours: 3.7 hrs

Conclusions

A simple and cheap solar cooker which can be fabricated by rural artisans in India has been developed. The maximum temperature reached with food material was 101°C with ambient temperature of 35°C, and relative humidity of 49%. The maximum temperature depends on atmospheric condition and intensity of solar radiations. The higher temperature reached in Udaipur Cooker is due to absorption of reflected radiation.

REFERENCES

1. Goswami Anant and Pareekh Kiran – 'Design Development and Study of a Solar Cooker, a B.E.(Ag.) thesis report.
2. Rajvanshi A.K. 'Gareloo upyog ke liye Saur Chullah' (Solar Cooker for Domestic application) Journal of the Institution of Engineers (I) Hindi Section Vol. 62 Part HI-1.
3. Annual Report of a Coordinated Research Programme On 'Operational Research in Solar Energy Utilisation in Agriculture' a USDA-ICAR project, Udaipur Centre for period Feb. 1, 1981 to Jan. 31, 1982.
4. Keshkari Chaman – Energy Resources Demand and Conservation, Tata McGraw Hill Publishing Co. Ltd., New Delhi, 1975.

Stabilization of Rice Bran by Conduction and Humid Heat Treatments

by
A. Chakraverty
Assistant Professor
Post Harvest Technology Centre
Indian Institute of Technology
Kharagpur 721302, India

N.C. Patel
Agricultural Engineer
Agricultural Engineering Section
Jyoti Ltd
Baroda, Gujarat, India

Abstract

The effects of conduction and humid heat treatments of raw rice bran at various temperatures for different times in a steam jacketed cylindrical stabilizer were studied. The results on stabilization show that the bran stabilized by conduction heat treatment at a temperature of 95°C for 20 min could be stored safely in sealed polythene bag at room temperature for 42 days with FFA content below 5% and the bran stabilized by humid heat treatment at 100°C for 20 min could be stored for 34 days with FFA content within 5%.

Introduction

Rice bran, with an annual production of 3.36 million t approximately, represents a potential source for extraction of high quality edible oil in India[1]. Owing to the problems in the production of pure raw rice bran and storage of fatty raw rice bran with low free fatty acid (FFA) content only 17% of the bran available is processed annually for oil extraction. It is well known that raw rice bran deteriorates at a fast rate during storage because of the hydrolysis of oils by the action of an enzyme (lipase) which is inherently present in it. Refining of crude oil for edible grade oil is considered to be uneconomical if its FFA content exceeds 10%[2]. As most of the rice mills in India are scattered, the collection and transportation of bran from different rice mills to oil extraction plants may take 15-30 days which is sufficient to increase FFA content above 10%. Therefore, unless the lipase is inactivated by stabilization of rice bran in the mill site it cannot be stored for 30 days with FFA content below 10%.

Loeb et al[3] studied the effects of (i) storage at low temperatures and low relative humidities; (ii) convection drying at temperatures of 70°, 85°, 100° and 110°C for various periods upto 5 h on the formation of FFA in rice bran during storage. The raw bran samples dried from 12.9 to 2.3% moisture content at 100°C for 2-3 h were stored safely for 125 days with FFA contents at about 5%.

Viraktamath and Desikachar[2] developed an electrically - heated, jacketed, closed revolving drum type stabilizer. The rice bran was heated by conduction under sealed condition at 110° - 115°C for 5 min. The bran thus treated could be stored for 3 months at 37°C and 70% relative humidity.

Though several researchers[1-5] studied the effects of different process variables on the formation of FFA and also developed some stabilizers, yet no efficient stabilizer is commercially available in India. Therefore, a project on stabilization of rice bran has been undertaken with the following objectives:

i) To develop a cylindrical steam jacketed conduction type rice bran stabilizer for condution and humid heat treatments;
ii) To determine the effects of various treatment temperatures and times on the formation of FFA in the treated bran during storage at room temperature; and
iii) To determine the optimum time and temperature for conduction and humid heat treatments in the stabilizer developed.

Materials and Methods

The rice bran stabilizer of 0.5 t/day capacity developed at PHTC, IIT, Kharagpur is shown in **Fig. 1**. It consists of a feed hopper, a screw conveyor, a cylindrical steam jacketed dryer fitted inside with rotary agitator, power transmission system and supporting structure. The inclination of the cylindrical dryer can be adjusted and is generally kept at 3° with the horizontal.

The bran from the hopper is uniformly fed by the screw conveyor to the inlet of the dryer and is then allowed to pass through the dryer. While passing through the steam jacketed and internally agitated dryer, the bran is dried to the desired moisture content by direct conduction heating of the inner surface of the cylindrical dryer.

The bran and dryer surface temperatures were measured by a mercury thermometer and a copper-constantan thermocouples, respectively. The moisture contents of the bran were measured by oven drying method (100° ± 2°C) and were expressed on dry basis only. The FFA contents of the bran were measured by the standard AOAC method[6]. All data shown in different figures are the average of three replications.

The raw rice bran was stabilized in the stabilizer by two methods, namely; dry conduction heat treatment and humid heat treatment. In the conduction heat treatment, raw bran was heated and dried in the steam jacketed dryer at each of the temperatures of 82°, 90° and 95°C for 5, 10, 15 and 20 min. The treated bran samples were then cooled in desiccators and stored in sealed polythene bags at room temperature for FFA, oil and moisture contents analyses.

In humid heat treatment, raw rice bran was heated in the dryer under air-tight condition at temperatures of 92° and 100°C for 5, 10, 15 and 20 min. During this treatment, the bran moisture was vaporised into the closed inner drying chamber making its environment humid. During humid heat treatments bran was agitated and uniformly heated inside the dryer. The treated bran was then exposed to atmosphere and cooled for sometime and then stored as above for FFA analysis.

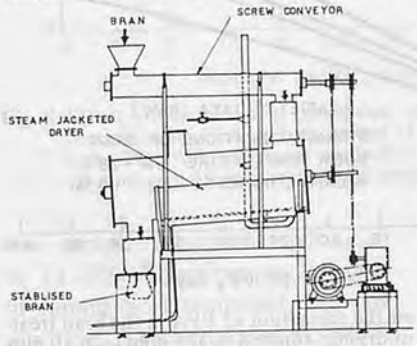

Fig. 1 Rice bran stabilizer.

Results and Discussion

Fig. 2 shows the relationship between the rise of bran temperature and conduction heating time at jacketed steam pressures of 0.6, 0.8 and 1.0 kg/cm² (gauge). It indicates that almost maximum bran temperatures of 82°, 90° and 95°C corresponding to the above pressures were attained within 10 min which revealed the effectiveness of the conduction heating type of stabilizer.

Figs. 3 and **4** show the conduction drying characteristics of bran at 82°C under falling-rate period. The effects of different temperatures on the rate of formation of FFA in treated bran during storage are shown in **Fig. 5**, including the rate of FFA formation during storage at room temperature which decreased as the treatment temperature of bran increased. It also clearly indicates that the rice bran is to be treated at a minimum temperature of 80° – 82°C for sufficient time for stabilization.

Figs. 6 and **7** show the effects of bran temperatures of 90° and 95°C on the formation of FFA in treated bran during storage. The FFA contents of bran treated at 90°C for 5, 10, 15 and 20 min increased from 1.76 to 5.78, 5.49, 5.43 and 4.74%, respectively, while the FFA contents of bran treated at 95°C for 5, 10, 15 and 20 min increased from 1.76 to 5.62, 5.23, 4.95 and 4.44%, respectively, after

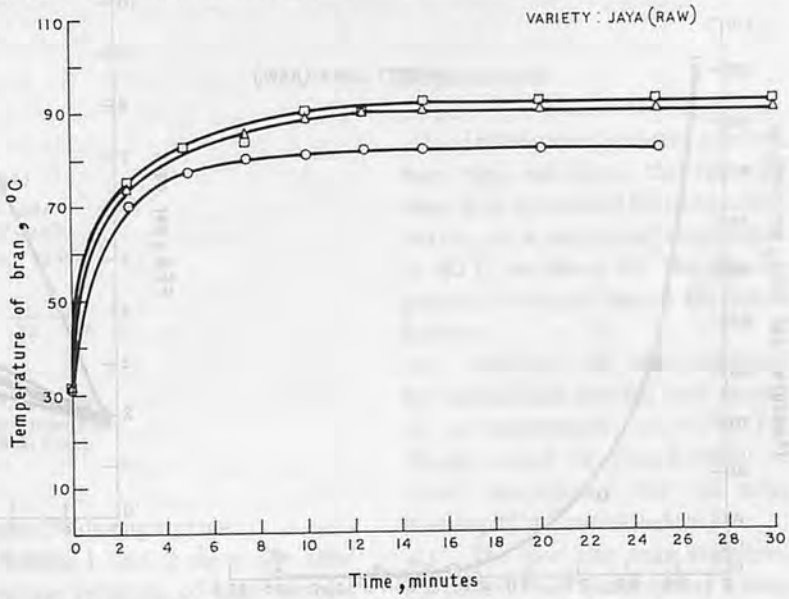

Fig. 2 Rise in temperature of bran with the conduction drying time at steam pressures of 1.0kg/cm² (-□-), 0.8kg/cm² (-△-) and 0.6kg/cm² (-○-) gauge.

42 days of storage. In the case of control sample, the FFA content was increased from 1.76 to 10.68% for the same period of storage. Thus rice bran treated at 90° to 95°C for 15-20 min in the conduction heating type stabilizer could be stored for 42 days keeping the FFA content below 5%.

Fig. 8 and 9 show the effects of humid heat treatments of bran at 92°C and 100°C on the formation of FFA in treated bran during storage. Fig. 8 and 9 indicate that the FFA contents of bran treated at 92°C for 5, 10, 15 and 20 min increased from 2.26 to 7.54, 7.29 and 5.16%, respectively, whereas the FFA contents of bran treated at 100°C for 5, 10, 15 and 20 min increased from 2.26 to 7.87, 7.02, 5.72 and 5.07%, respectively, during 39 days of storage. During 34 days, the FFA content of the con-

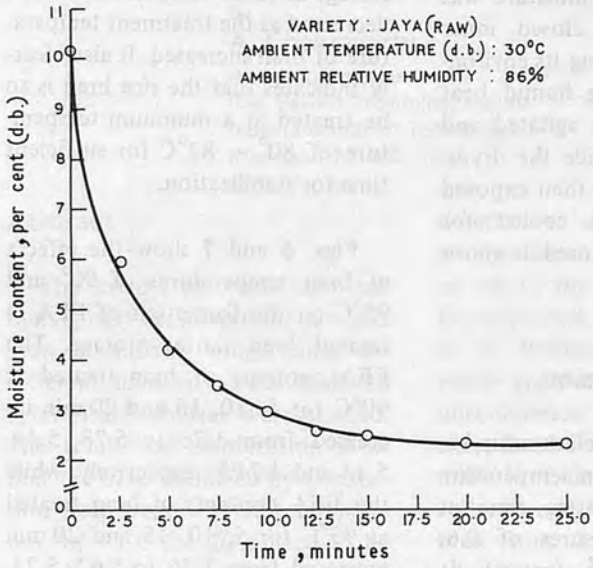

Fig. 3 Moisture content of bran vs drying time for conduction heating at 82°C.

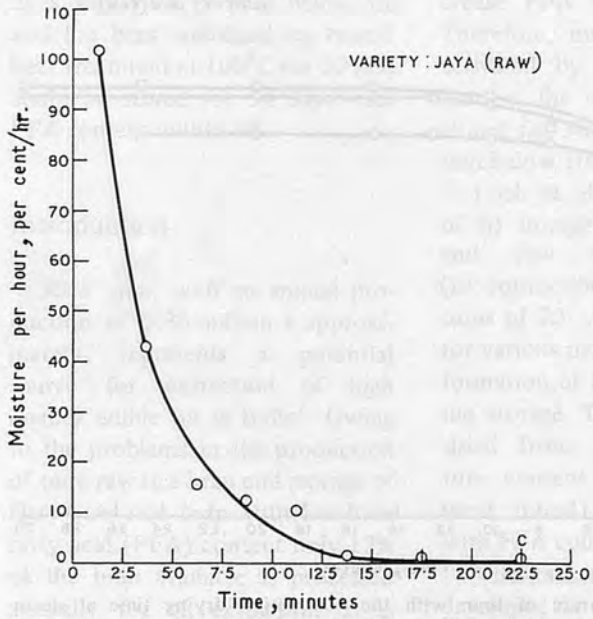

Fig. 4 Drying rate vs time for bran heated at 82°C.

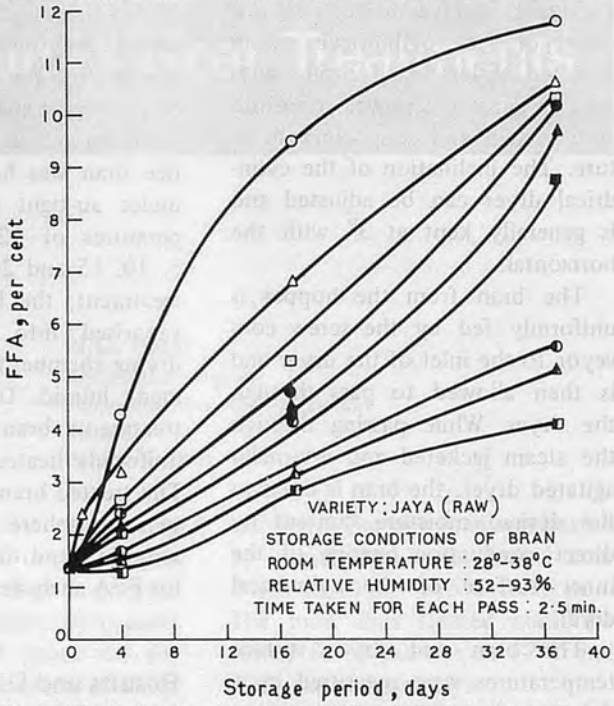

Fig. 5 Effect of storage on the formation of FFA in treated bran stored at room temperature. Time and temperature of drying: control(-○-); after 1st pass, 70°C(-△-); after 2nd pass, 77°C(-□-); after 3rd pass, 80°C(-●-); after 4th pass, 81°C(-▲-); after 5th pass, 82°C(-■-); 5 min, 82°C( ); 10 min, 82°C( ) and 15 min, 82°C( ).

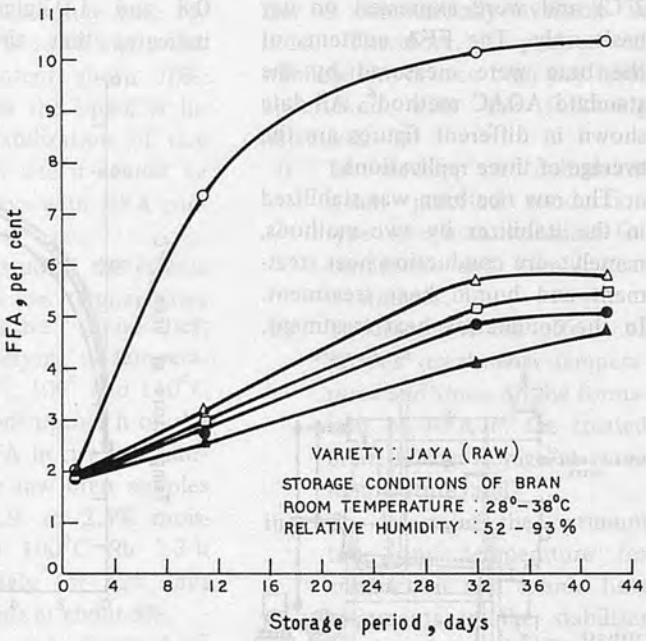

Fig. 6 Effect of storage on the formation of FFA in the bran treated at 90°C. Time of drying: control(-○-); 5 min(-△-); 10 min (-□-); 15 min(-●-) and 20 min(-▲-).

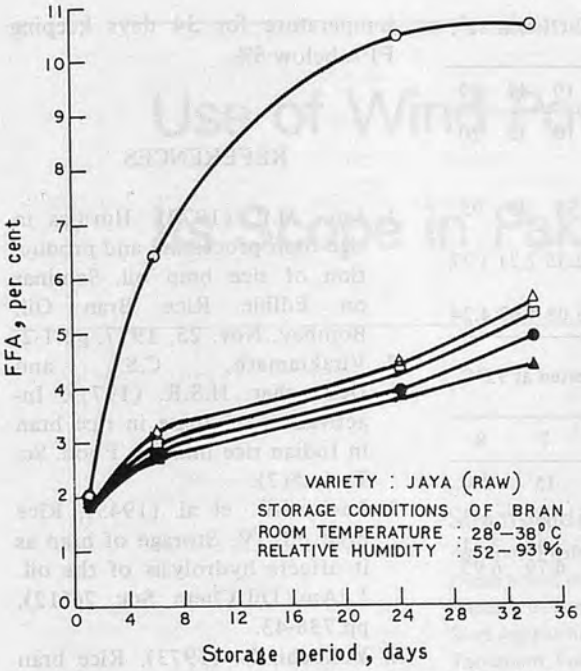

Fig. 7 Effect of storage on the formation of FFA in the bran treated at 95°C. Time of drying: control(-o-); 5 min(-△-); 10 min(-□-); 15 min(-●-) and 20 min(-▲-).

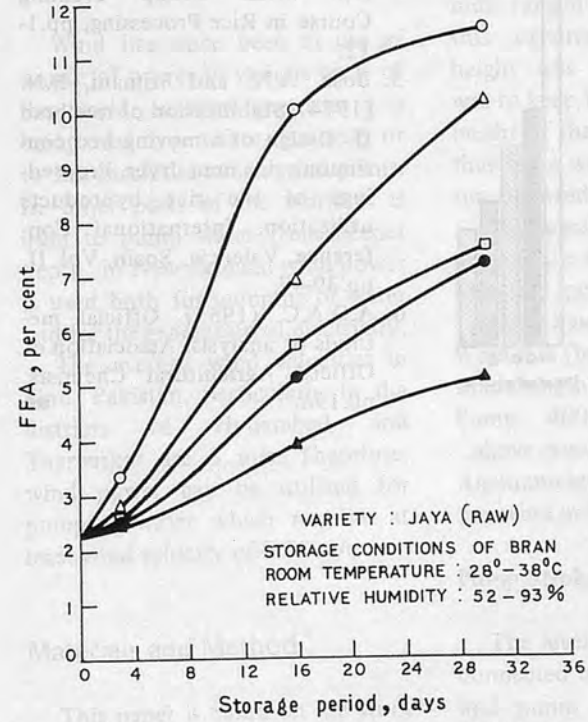

Fig. 8 Effect of humid heat treatment at 92°C on the formation of FFA in bran stored at room temperature. Time of treatment: control(-o-); 5 min (-△-); 10 min(-□-); 15 min(-●-) and 20 min(-▲-).

trol sample increased from 2.26 to 11.27%. Therefore, in the case of humid heat treatment, the raw rice bran is to be treated at 100°C for 20 min to keep the FFA level below 5% during storage.

Tables 1 and 2 show the final moisture contents of bran samples immediately after different heat treatments and different storage

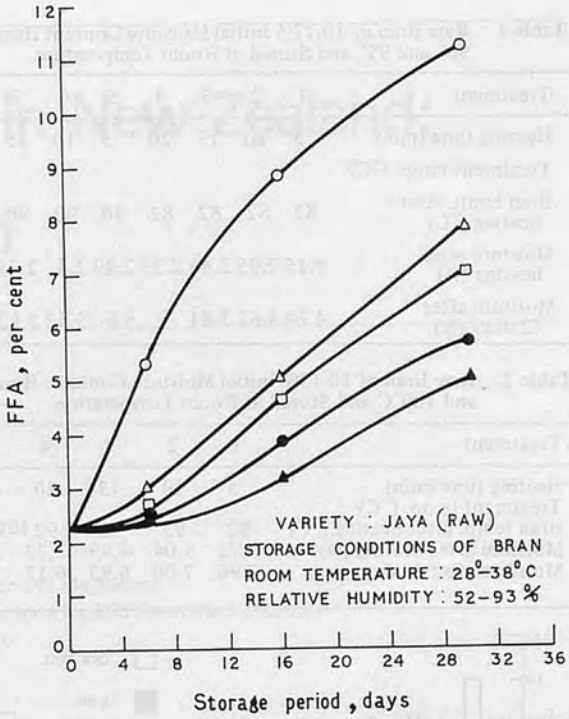

Fig. 9 Effect of humid heat treatment at 100°C on the formation of FFA in bran stored at room temperature. Time of treatment: control(-o-o-); 5 min (-△-△-); 10 min(-□-□-);15 min (-●-●-) and 20 min (-▲-▲-).

periods.

The comparison between dry conduction heat and humid heat treatments is shown in Fig. 10. Fig. 10 reveals that within the limits of the present study the conduction heat treatment is preferred to humid heat treatment.

Conclusions

i) In the steam jacketed conduction type stabilizer, the raw rice bran is to be treated by conduction heating at a minimum temperature of 80°C or above for the desired period (5 min or more) for stabilization;

ii) The raw rice bran stabilized by conduction heating and drying at a temperature of 95°C for 20 min could be stored safely at room temperature for 42 days keeping FFA content below 5%.

iii) The raw rice bran stabilized by humid heat treatment at a temperature of 100°C for 20 min could be stored safely at room

Table 1 Raw Bran of 10.17% Initial Moisture Content Heated by Conduction at 82°, 90° and 95° and Stored at Room Temperature

Treatment	1	2	3	4	5	6	7	8	9	10	11	12
Heating time (min)	5	10	15	20	5	10	15	20	5	10	15	20
Treatment temp. (°C)												
Bran temp. after heating (°C)	82	82	82	82	90	90	90	90	95	95	95	95
Moisture after heating (%)	4.15	2.95	2.46	2.33	2.49	2.4	2.35	2.29	2.39	2.35	2.21	1.77
Moisture after 42 days (%)	4.74	4.67	3.84	–	5.6	5.52	5.42	5.3	5.25	5.08	4.67	4.24

Table 2 Raw Bran of 10.13% Initial Moisture Content, Humid Heat Treated at 92°C and 100°C and Stored at Room Temperature

Treatment	1	2	3	4	5	6	7	8
Heating time (min)	5	10	15	20	5	10	15	20
Treatment temp. (°C)								
Bran temp. after heating (°C)	92	92	92	92	97	97	97	97
Moisture after heating (%)	5.73	5.04	4.99	3.73	5.26	4.93	3.83	3.41
Moisture after 34 days (%)	7.96	7.00	6.93	6.12	7.8	6.9	6.79	6.93

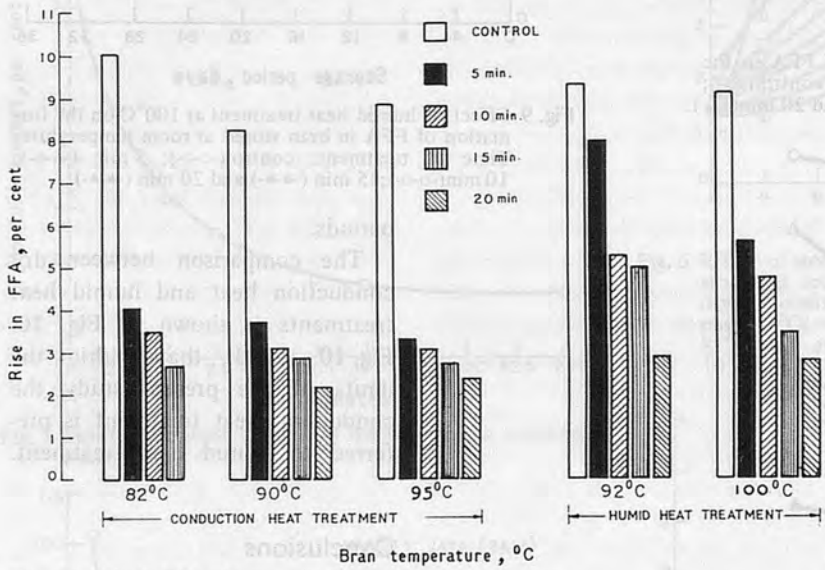

Fig. 10 Rise in FFA of bran samples after 30 days of storage.

temperature for 34 days keeping FFA below 5%.

REFERENCES

1. Jaju, M.P. (1977). Hurdles in rice bran processing and production of rice bran oil. Seminar on Edible Rice Bran Oil, Bombay, Nov. 25, 1977, pp.1-2.
2. Viraktamath, C.S. and Desikachar. H.S.R. (1971). Inactivation of lipase in rice bran in Indian rice mills. J. Food. Sc. Tech. 8(2).
3. Loeb, J.R. et al. (1949). Rice bran oil. IV. Storage of bran as it affects hydrolysis of the oil. J. Am. Oil Chem. Soc. 26(12), pp.738-43.
4. Yokochi, K. (1973). Rice bran processing for the production of rice bran oil and rice bran protein meal. Group Training Course in Rice Processing, pp.1-12.
5. Bose, A.N. and Srimani, B.N. (1974). Stabilization of rice bran II. Design of a moving bed continuous rice bran dryer. Proceedings of the rice byproducts utilization. International Conference, Valencia, Spain, Vol. II. pp.39-47.
6. A.O.A.C. (1965). Official methods of analysis. Association of Official Agricultural Chemists. pp.196.

Use of Wind Power in New Zealand: Its Scope in Pakistan

by
Shamsuddin A. Mahar
Assistant Professor
Department of Farm Power and Machinery
Faculty of Agricultural Engineering and Farm Mechanization
Sind Agriculture University
Tandojam, Pakistan

Introduction

Wind has since been in use as source of power in various parts of the world. In some countries it is being used to generate electricity or to run machines which grind grams. In other parts of the world it is used to pump water from deeper depth. In New Zealand wind power is used both for pumping of water and for the generation of electricity.

The average wind velocities in Sind, Pakistan, particularly in the districts of Hyderabad and Tharparkar are 3 m/s. Therefore, wind power can be utilized for pumping water which requires at least wind velocity of 0.76 m/s.

Materials and Method

This paper is based on the work done during 1976-78 for pumping water. The experiment was conducted at Lincoln College, Canterburry, New Zealand.

Generally, wind mills are erected on a steel frame or on a wooden frame but in this case a concrete pole was used which was stronger and cheaper than steel or wooden frame. The height of these wind mills ranged from 2 to 3 m. But in this experiment the wind mill height was 10.5 m. The purpose was to keep the wind mill above the height of the trees and buildings so that more wind could be utilized to run the wind mill at a greater speed.

The specifications of the various parts of the wind mill (Fig. 1) are:

Concrete pole: 10.5 m with 1.8 m ground base.
Wind mill (body): 1.34 m
Blade length: 300 mm
Pump: 400 mm (placed 200 mm above ground level)
Anemometer at the same height as wind mill.

Pump Stroke Adjustment

The level arm was 455 mm long, connected with mill rod on one end and pump rod at the other. A movable pivot joint was provided to adjust pump stroke.

Karachi, Hyderabad, part of Nawabshah and Tharparkar districts of Sind province are in the velocity wind zone. In Hyderabad, Nawabshah and Tharaparkar districts canal water is available but not in abundance to meet the crop requirements even at 100% cropping intensity. The major part of Tharparkar district is not under canal irrigation but is rainfed desert with sand dunes. People have to wait for rain even to satisfy their domestic and livestock water requirements. In areas where open wells are dug, a

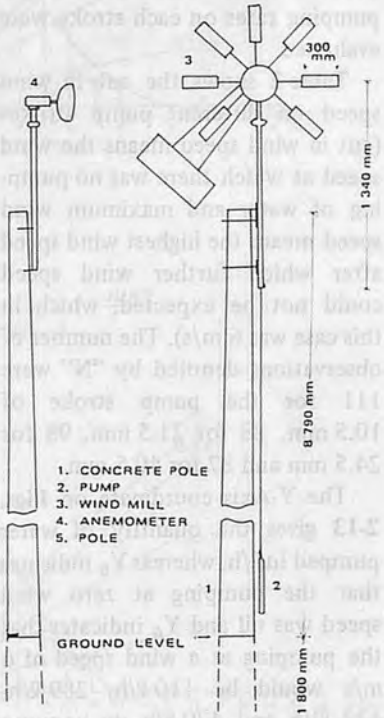

Fig. 1 General view of the experimental wind mill

lot of labour is required to take water out of wells. Therefore, it seems better and quite reasonable to installl wind mills in these areas.

The main objective of this experiment was to determine the relationship between hourly wind speed and water pump and compare the performance and output of the system in New Zealand and Pakistan. The hourly wind records also gave the nature and fluctuations of wind speed during each hour. This provided an opportunity to carry out further study on the reliability and the power in wind from different directions.

Results and Discussion

From the locally available data for Christchurch, New Zealand, a Weibull Model of wind speed frequency curve for every month as shown in **Figs. 2-13** was drawn. From the observations as shown in **Table 1** the total number of hours wind availability in a particular month was also calculated and the pumping rates on each stroke were evaluated.

Table 2 shows the cut in wind speed on different pump strokes (cut in wind speed means the wind speed at which there was no pumping of water and maximum wind speed means the highest wind speed after which further wind speed could not be expected, which in this case was 6 m/s). The number of observations denoted by "N" were 111 for the pump stroke of 10.5 mm, 88 for 21.5 mm, 98 for 24.5 mm and 87 for 40.5 mm.

The Y-Axis coordinate on **Figs. 2-13** gives the quantity of water pumped in ℓ/h, whereas Y_0 indicates that the pumping at zero wind speed was nil and Y_6 indicates that the pumping at a wind speed of 6 m/s would be 110 ℓ/h, 289 ℓ/h, 422 ℓl/h and 470 ℓ/h on a pump stroke of 10.5 mm, 21.5 mm, 24.5 mm and 40.5 mm, respectively.

Table 1 Number of Hours and Pumping Rates of Wind Mill per Month — Unit: h

Month	No. of Hours	Pumping Rates (Litres) 10.5 mm Stroke	21 mm Stroke	24.5 mm Stroke	40.5 mm Stroke
January	100	11 000	28 900	42 200	47 000
February	84	8 480	24 515	35 515	39 870
March	79	8 679	22 802	33 295	37 083
April	74	8 129	21 357	31 185	34 733
May	76	8 426	22 137	32 325	36 002
June	68	7 491	19 680	28 738	32 007
July	69-30	7 645	20 085	29 329	32 665
August	72-18	7 953	20 894	30 510	33 981
September	78-18	8 613	22 628	33 042	36 801
October	79-30	8 745	22 975.5	33 549	37 365
November	76-18	8 393	22 050.7	32 198.6	35 861
December	86-18	9 493	24 940	36 410	40 561
Total	943.12	113 047	272 964.2	39 896.6	443 829

Table 2 Cut in Wind Speed and Constants for Equation of Straight Line — Unit: m/s

Wind Speed	Pump Stroke 10.5 mm	21.5 mm	24.5 mm	40.5 mm
Cut in wind speed	0.76	0.97	0.80	0.64
Maximum wind speed	6	6	6	6
No. of observations (N)	111	88	98	87
Y_0	0	0	0	0
Y_6	110 ℓ/h	289 ℓ/h	422 ℓ/h	470 ℓ/h
A_0	16.21	56.7	65.15	56.23
A_1	21.81	57.7	81.27	87.73
Coefficient of correlation (γ)	0.77	0.48	0.73	0.59

"A_0" and "A_1" are the constants for the euation of a straight line and "γ" is the coefficient of correlation. On the basis of the coefficient of correlation, the test of significance denoted by "t" for various pump strokes was determined which shows whether the pump stroke and wind speed had some significant relation or not.

The quantity of water pumped on a particular stroke could be calculated by the equation:

$$Y = A_0 + A_1 b$$

where A_0 and A_1, are the constants and b is the wind speed in m/s.

Test of Significance (t):

Pump stroke 10.5 mm, N = 111

$$t = \gamma\sqrt{(N-2)/(1-\gamma^2)}$$
$$= 0.77\sqrt{(111-2)/1-0.6)}$$
$$= 12.705$$

P has value less than 0.001. The value is significant.

Pump stroke 21.5 mm, N = 88

$$t = \gamma\sqrt{(N-2)/(1-\gamma^2)}$$
$$= 0.48\sqrt{(88-2)/(1-0.23)}$$
$$= 10.21$$

P has value less than 0.001. The value is significant.

Pump stroke 24.5 mm, N = 98

$$t = \gamma\sqrt{(N-2)/(1-\gamma^2)}$$
$$= 0.8\sqrt{(98-2)/(1-0.53)}$$
$$= 30.40$$

P has values less than 0.001. The value is significant.

Pump stroke 40.5 mm, N = 87

$$t = \sqrt{(N-2)/(1-\gamma^2)}$$
$$= 0.59\sqrt{(87-2)/(1-0.48)}$$
$$= 7.54$$

P has value less than 0.001. The value is significant.

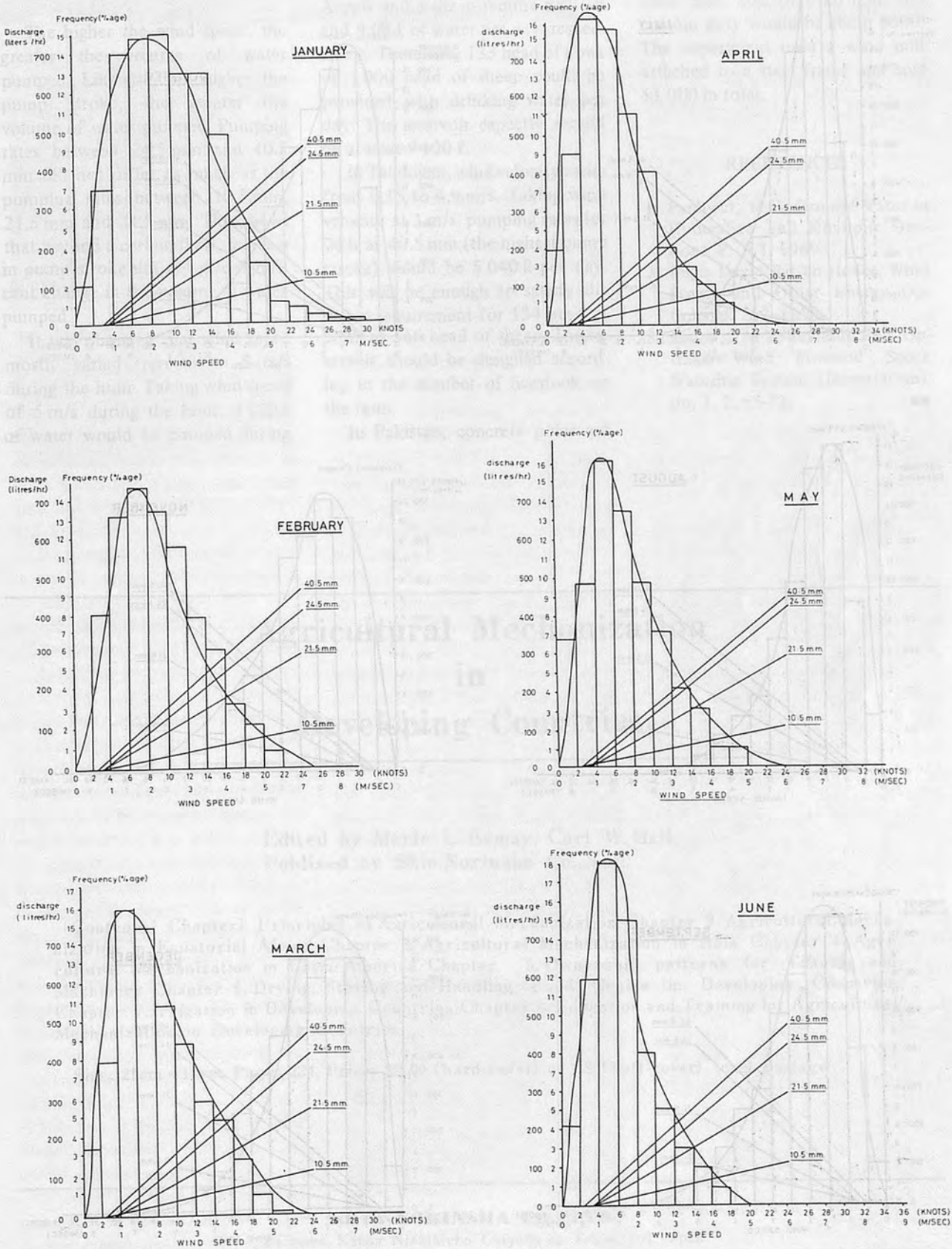

Figs. 2-7 Weibull model of monthly wind speed frequency curve for January-June

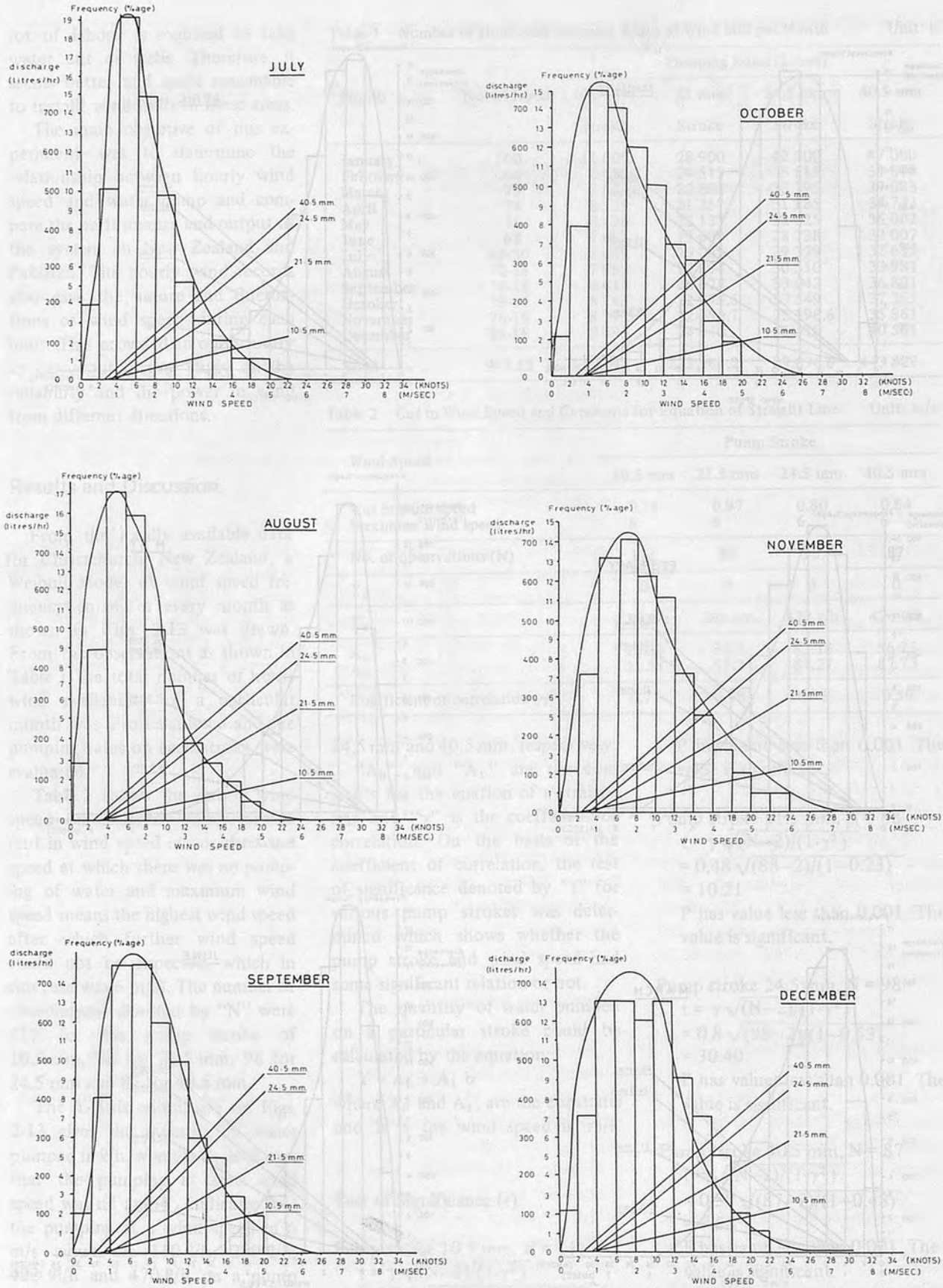

Figs. 8-13 Weibull model of monthly wind speed frequency curve for July-December

Conclusions

The higher the wind speed, the greater the volume of water pumped. Likewise, the higher the pump stroke, the greater the volume of water pumped. Pumping rates between 24.5 mm and 40.5 mm did not differ as much as the pumping rates between 10.5 mm, 21.5 mm and 24.5 mm. This shows that beyond a certain limit, increase in pump stroke did not give significant change in the volume of water pumped.

It was observed that wind speed mostly varied from 3 to 5 m/s during the hour. Taking wind speed of 5 m/s during the hour, 9 120 ℓ of water would be pumped during 24 h on a pump stoke of 40.5 mm. A cow and a sheep require 68.15 ℓ and 9.08 ℓ of water per day, respectively. Therefore, 133 head of cows or 1 000 head of sheep could be pvovided with drinking water per day. The reservoir capacity should be at least 9 120 ℓ.

In Tandojam, wind velocity varies from 0.15 to 4.9 m/s. Taking wind velocity at 3 m/s, pumping rates for 24 h at 40.5 mm (the highest pump stroke) would be 5 040 ℓ per day. This will be enough to satisfy the water requirement for 134 head of cows or 566 head of sheep. The reservoir should be designed according to the number of livestock on the farm.

In Pakistan, concrete poles are available locally. The cost of a concrete pole, cost of wind mill, and custom duty would be about $500. The experiment used a wind mill attached to a steel frame and cost $1 000 in total.

REFERENCES

1. Panhwar, M.H, Ground water in Hyderabad and Khairpur Divisions. P. 261, 1969.
2. Inglis David Ritten House, Wind Power and Other Energy Options, p. 267, 1978.
3. Mahar, A. Shamasuddin, Optimal Wind Powered Stock Watering System (Dissertation). pp. 1, 2, 65-72.

Agricultural Mechanization in Developing Countries

Edited by Merle L. Esmay, Carl W. Hall
Publised by Shin-Norinsha Co., Ltd.

〔Contents〕 Chapterl. Principles of Agricultural Mechanization. Chapter 2. Agricultural Mechanization in Equatorial Africa. Chapter 3. Agricultural Mechanization in Asia. Chapter 4. Agricultural Mechanization in Latin America. Chapter 5. Ownership patterns for Tractor and Machinery. Chapter 6. Drying, Storing and Handling Food Grains in Developing Countries. Chapter 7. Irrigation in Developing Countries. Chapter 8. Education and Training for Agricuitural Mechanization in Developing Countries.

Size: 21cm×15cm, Page: 234, Price: $9.00 (hard-cover) or 5$ (Soft-cover)...excl. postage

SHIN-NORINSHA CO., LTD.
7, 2-Chome, Kanda Nishikicho Chiyoda-ku Tokyo, 101 Japan

NEWS

Agri-tech International 84
September 12-24, 1984, Louisville, USA

Agri-tech International is America's first true international agricultural exposition designed specifically to present to the manufacturer, distributor and dealer the latest technology and innovative products available to the farming industry.

For shortliners and major producers seeking a positive response to today's tougher world trading conditions, Agri-tech International presents a new marketing opportunity.

Louisville,Kentucky, at the centre of the world's largest market for farm machinery, has been chosen for its long and close association with the US farm industry.

The Exhibits:

High technology and equipment, much of it new to the U.S. farm industry. Products will major on cost and labour saving equipment and services. Product sectors will include:

Equipment and services for: Food grains, feed crops, sorghum, grasses, soy beans; Fruits, citrus and soft; Livestock husbandry; Specialist crops (grapes, rice, peanuts, cotton); Primary food processing (including drying, storage, handling); Agricultural chemicals and fertilisers; Irrigation, water management; General services (accountancy software, analysis, management techniques); Plant and machinery in general.

For further information contact:
Agri-tech International 84
11 Manchester Square
London W1M5AB
United Kingdom

SIMA
March 6-13, 1983, Paris/France

The 54th International Exhibition of Farm Machinery (SIMA) was held in Paris.

With a wide choice of equipment: under 2 300 trademarks originating from 30 countries, almost 20 000 machines and items of equipment are exhibited covering all types of use, all requirements for all countries.

Farmers, technicians, dealers, industrialists, teachers and researchers thus form a universal symposium where the latest progress in agronomy, the latest requirements of users are all discussed.

The exhibition will also include: The 15th international exhibition of mechanised gardening equipment. In 1983 there will be many novelties amongst the 3 000 items of equipment for activities ranging from gardening and horticulture to the creation of green spaces and the maintenance of the landscape.

This year's medal-winning machines (three gold, eight silver and twelve noteworthy) were selected by the Committee to Encourage Technical Research.

Gold Medal Winning Machines at 54th SIMA are as follows:

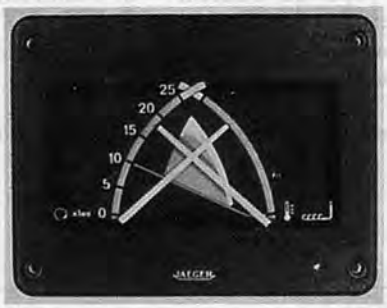

No. 1 Economic Operational Indicator for a Diesel Engine by Renault Agriculture

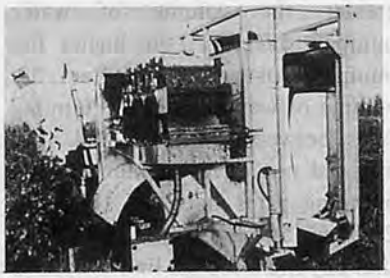

No. 2 Press/Dryer Fitted to a Vintaging Machine by Ets Dagnaud Motoculture Service

No. 3 Light Branch Shaker for Olive Gathering by Pellenc & Motte (Ets)

The Verona FIERAGRICOLE Fair
March 12-20, 1983, Verona/Italy

The Verona FIERAGRICOLA Fair was established in 1898. It is held for 8 days in March and so far about 500 000 visitors from all over the world have inspected the latest developments in all aspects of agriculture and livestock rearing.

The fact that the Fair takes place in the "heartland" of one of the world's most noteworthy agricultural areas, namely the Po valley in Northern Italy, where highly mechanized modern agricultural methods give one of the best yields per hectare in the world, gives this enormous display of machines and products from all the major production areas in Europe and elsewhere its character of authentic world showcase for the agriculture of the Mediterranean basin.

It has 300,000 m^2 of stands and more than 2 000 exhibitors, including all the "household" names from

Verona Fairgrounds

Italy and abroad.

The Verona FIERAGRICOLA Fair is an ideal meeting place for growers and producers. Here they can obtain a full and up-to-date picture of both present and future agricultural trends.

The Trade sections

- Farming foodstuff products;
- Seeds, nursery, flower growing and greenhouse goods;
- Prefabricated products for rural buildings;
- Machines and tools for working terrain, including fertilization, seeding, plant cultivation and protection, harvesting, primary processing, grading and preserving farm products, machinery for lifting and transporting loads;
- Materials and products for livestock breeding establishments, livestock, poultry and rabbit breeding systems;
- Feeds, additives, veterinary products;
- International cattle sheep, goat and swine markets.

Regional Workshop for Agricultural Machinery Manufacturers' Association

Aug. 23-28, 1982, Lahore/Pakistan

The Agricultural Machinery Division (AMD) of PARC in collaboration with the Regional Network for Agricultural Machinery (RNAM) arranged a Regional Workshop for Agricultural Machinery Manufacturers' Association during the period August 23-28, 1982, at the Pakistan Administrative Staff College, Lahore.

The workshop was inaugurated by Lt. Gen. Saeed Qadir, the Federal Minister for Railways and Production. A total of 14 foreign delegates from the Economic and Social Commission for Asia and the Pacific (ESCAP), the RNAM, United Nations Industrial Development Organization (UNIDO), the United Nations Development program (UNDP), India, Indonesia, the Philippines, Sri Lanka and Thailand participated in the workshop. There were 125 local participants who attended the inaugural session of the workshop. In the inaugural session, Dr. Zia ur Rahman, Project Director, AMD welcomed the participants. Dr. H.G.R. Reddy presented a message of Mr. S.A.M.S. Kibria, Executive Secretary of ESCAP. The Chief Guest highlighted the importance of farm mechanization and need of promoting local manufacturing of farm machines in the participating countries. The honourable minister also inaugurated the display of locally manufactured farm machines.

RNAM was established in 1978 under the ESCAP, an agency of the United Nations (UN). There are eight participating countries in RNAM namely: India; Indonesia; Iran; Pakistan; Philippines; Republic of Korea; Sri Lanka; and Thailand. The main objective of RNAM is the promotion of local manufacturing of farm machinery with the available indigenous resources in the participating countries. The RNAM had successfully completed its phase which ended on December 31, 1982. The AMD has been nominated as the National Institute to coordinate RNAM activities in Pakistan during the 2nd phase (Jan. 82 to Dec. 84) of the RNAM project.

Dr. Zia ur Rahman, Project Director, AMD and Mr. Ceferino L. Follosco, RNAM Consultant, were elected as Chairman and Vice-Chairman, respectively, for the technical sessions of the workshop. There were 3 such technical sessions and one concluding session. These were attended by 70 participants including the Regional delegates. Mr. C.S. Sridharan from RNAM presented the Regional Status of Farm Machinery Manufacturing in the RNAM countries. Mr. Follosco presented a situation paper on promotion of local manufacture of agricultural machinery. The country reports of India, Indonesia, Pakistan, Philippines, Sri Lanka & Thailand were presented by the Agricultural Machinery Manufacturers' Representatives of these countries. Mr. Amir H. Khokhar, Managing Director, Aerodynamical Technico, Lahore, presented the country report for Pakistan. There were 5 other papers presented by the local participants on various aspects of farm machinery design, manufacture and marketing.

The participants visited Millat Tractors Ltd., Ittefaq Brothers Ltd.; and the Pakistan Engineering Company (PECO) Ltd., in Lahore, and were also taken to Faisalabad to visit the University of Agriculture and a local farm machinery manufacturing firm, M/S Rachna Industries Ltd., on Samundri Road.

In the concluding session, the participants reviewed the draft of the report of the Regional Workshop of Agricultural Machinery Manufacturers' Association. The draft was approved by the partici-

pants with some amendments. The workshop was concluded on August 28, 1982, with the following general recommendations for all the RNAM countries:

1. Raw material depots should be established at various levels, stocked with alloys of steel, aluminium, copper and appropriate steel sections.
2. More training institutions should be established throughout the countries to train operators, mechanics, middle level technical supervisors, engineers and farmers.
3. To encourage better quality, national level testing and certification should be carried out and certificate seals of satisfactory performance should be issued.
4. In order to carry out mechanization studies on scientific lines in relation to different crops and soils conditions, more mechanization research centres should be established.
5. To encourage local production of farm machinery, import should be limited only to those machines which cannot be manufactured within a reasonable time in the country.
6. Census of agricultural machinery should be carried out in RNAM countries every 5 years.
7. Trade Journals/Newsletters etc. containing business information should be published by the manufacturers' associations.
8. In order to improve the quality of implements, prize awards schemes should be organized for:
   a) New designs
   b) Modified prototypes
   c) Commercial machines, et.

The following recommendation were adopted for Pakistan specifically:

1. The Government should subsidise the sale of implements, excluding tine type cultivator, to popularise them. Farmer's shows should also be organised to demonstrate to the farmers the benefits of agricultural machines.
2. RNAM should collect information on precision land levelling from its member countries for use in Pakistan.
3. Agro-service centres/custom hiring centres should be established at tehsil levels to rent costly equipment like harvesters, disc harrows, mould board plows, disc plows, disc harrow, rotary cultivator, land levellers, sprayers, etc which individual farmers cannot afford to purchase.
4. Low interest loans to agricultural machinery manufacturers' at 5 to 6% interest rate should be provided by the financial institutions.
5. Agricultural implements manufacturing industries should be encouraged and promoted in Sind, Baluchistan and NWFP.
6. Research and development (R & D) activities in all the provinces should be encouraged and necessary facilities provided by the provincial Governments.
7. Local agricultural machinery manufacturers' association should be more active. Efforts should also be made to establish agricultural machinery manufacturers association at the provincial level. The national association should be revitalized.

The proceedings of the workshop will be obtained by writing at the following address:

Agricultural Machinery Division, National Agricultural Research Centre, P.O. National Institute of Health, Islamabad, Pakistan. ■■

ERRATA

Vol. XIV, No. 1, Winter, 1983

Design of a Simple, Low-Lift, Wind-Powered Pump for Rural Use in Thailand; by Desa Ahmed, p.20.

The title should read: Design of a Simple, Low-Lift, Wind-Powered Pump for Rural Use in Malaysia.

Vol. XIII, No. 4, Autumn, 1982

Energy Use for Crop Production in Bangladesh; by N.N. Sarker and S.M. Farouk, p.71.

The footnote should read: This paper was presented at the Science Conference at BARI, Joydevpur, Dhaka, February 7-11, 1982.

On-Farm Irrigation Water Management Problems

(Bangladesh)

This document reports the findings and conclusions of a field research project into the on-farm water management problems of three irrigation schemes in Mymensingh District of Bangladesh. The research was undertaken by a multidisciplinary team including staff and students from Bangladesh Agricultural University under the leadership of Prof. Biswas, and financed by the Ford Foundation. The field studies were conducted in 1980 and 1981; and the papers were presented, at the Workshop on On-Farm Water Management Problems, held at the Institute of Nuclear Agriculture, Bangladesh Agricultural University, on 17th and 18th of December, 1981.

The conclusion of the workshop was that institutional constraints and the poor layout, construction and maintenance and consequent water losses in the canal system are major causes of low productivity on the three studied irrigation schemes. Preliminary Cost-Benefit ratios indicate that provided insitutional constraints are overcome the suggested low-cost lining materials may generate reasonable economic returns in terms of increased yields and/or increased irrigated acreage consequent on water loss reduction. These technologies should be tested in the field and suggestions are made in the Recommendations and Action Plan to this effect.

Size: 23.5 x 16.5 cm, 144pp.

Soft cover, Price US$5.00

Published 1982 by the Bureau of Socioeconomic Research and Training, Bangladesh Agricultural University, Mymensingh, Bangladesh.

Directory of Italian Farm Machinery Manufacturers

(Italy)

The latest edition of the Directory of Italian agricultural machinery manufacturers, which Unacoma has formulated and is pleased to present to Italian and foreign businessmen and dealers, continues the tradition which has, in the past, met with the appreciation of those concerned with agricultural mechanization.

It is a proof of the serious research and information activities carried out by the Association in an attempt to promote widespread knowledge of the above sector of Italian production.

This production which, as can be clearly seen by the dimensions and content of this Directory, now covers all the possible requirements, in terms of technologically advanced mechanization, of a modern agricultural concern, for every type of cultivation, whether herbaceous or arboreal,mediterranean or otherwise.

Size: 28.5 x 21 cm, 760pp

Paper cover

Published 1982 by UNACOMA (Italian Farm Machinery Manufactures Association)
Via L. Spallanzani, 22-A-00161 Roma, Italy

Farm Mechanization in Japan — Agriculture, Asia Special Issue No. 13—

(Japan)

The objective of this publication is to disseminate the knowledge regarding farm mechanizaiton in Japan on the whole to those who have deeply commited themselves to agricultural production in overseas countries. The plan is most opportune and will be of great value for deepening understanding of the involved people of the development of the agricultural mechanization of our country.

Japanese farm machinery makers have exerted all possible efforts in the exploitation and improvement of such machines as demanded for higher productivity, primarily for rice crops. Today the farm mechanization in Japan has already reached to the extent where farmers are freed from the hard and heavy physical labour involved in rice planting and harvesting, etc. through the efficient use of farm machines. The manufacturers are now engaged in the development and improvement of farm machinery for upland crops such as wheat, soybean crops, or for soil conservation measures, which are considered essential for smooth operation of reorganization projects for paddy rice field utilization, which has been set out by the Government as one of the national schemes.

The industrial community of farm machinery manufacturers has kept supplying farm machines, the means of agricultural production, to many overseas countries, in the hope that they may contribute to raising the standard of agricultural production in each country. The publication of this special issue will help the people abroad to have a better understanding and recognition of the advance of the agricultural mechanization in Japan. This publication will be fully utilized as material in establishing policies for higher agricultural production in other countries.

Size: 25.5 x 18 cm, 244pp.

Paper cover, Price US$55.00

BOOK REVIEW

Published 1982 by The Association of Agricultural Relations in Asia
202 Yamanote House, 21-3, Yoyogi 1-chome, Shibuya-ku, Tokyo, Japan.

Multiple Cropping and Tropical Farming Systems

(Philippines)

by Willen C. Beets, ADB Agronomist, Manila, Philippines

Recently there has been an increasing interest in the role of multiple cropping systems in tropical agricultural development. It is now generally recognized that multiple cropping can be an important way of increasing the productivity of tropical farming systems.

This book brings together relevant research and development strategies for integrated multiple cropping systems throughout the tropical world. The aim of the book is to describe the history, agronomy, crop husbandry, management economics and planning of those multiple cropping systems which are presently practiced or feasible. Included are special sections on plant interrelationships and competition as well as on economic and social aspects of multiple cropping. For the readers who do not have an agricultural background, the more general problems of tropical farming systems are discussed and attention is given to the economics of the rural developing tropics. Special technical and socio-economic problems connected with low level technology farming are also considered.

Chapters:

The different multiple cropping systems, The history of multiple cropping, Agro-technical characteristics, Economic and social aspect, Plant interrelationships and competition, Design of suitable farming systems, Farming systems research,

170 pages,

Available from:

Information Publications Pte. Ltd., 02-06 1st Floor, Dei-fu Industrial building, 24 New Industrial road, Singapore.

Small Farm Weed Control
– An Annotated Bibliography –

(U.K.)

Compiled and edited by J.A.F. Compton

Small-scale farmers, who form the vast majority of agriculturalists in developing countries, have received increasing attention from the agricultural research community in recent years. With the emphasis on raising the production of small farms has come a recognition that weed control stands as one of the most important factors determining small farm yields. Research in this field has burgeoned; as an illustration, 189 of the 298 references cited in this bibliography were published after the beginning of 1976.

This bibliography was initiated by the Weed Control Working Group of the Intermediate Technology Development Group (ITDG) as part of the ITDG agriculture programme. It represents the first attempt to compile literature describing appropriate technologies for the control of weeds on small farms. It does not pretend to include all the relevant literature on the subject (this is an impossible claim for any bibliography); rather, its purpose is to guide the reader through the range of weed control techniques that have been documented and to indicate the scientific workers and institutions currently active in this field of research.

It is increasingly recognized that weed control techniques for the small farm cannot be studied in isolation, but must be seen and studied as an integral part of the farming system. Besides providing information on low-cost tools and techniques for weed control, it is hoped that the references in the bibliography may provide the reader with insights into the kinds of social, economic and environmental factors which influence the choice of techniques to use, as well as demonstrating some of the methods used to study the relationship of weed control to other aspects of small-scale farming systems.

Size: 28 x 21.5 cm, 174pp.

Paper cover, Price US$10.00

Published January 1982 by Intermediate Technology Publications, ltd
9 King Street
London WC2E 8HN, U.K. ■■

A NOTE TO AMA CONTRIBUTORS

The Editorial Staff of the AMA requests contributors of articles for publication to observe the following editorial policy and guidelines in order to improve communication and to facilitate the editorial process :

Criteria for Article Selection

Priority in the selection of articles for publication is given to those that –

a. are written in the English language ;
b. are relevant to the promotion of agricultural mechanization, particularly for the developing countries ;
c. have not been previously published elsewhere, or, if previously published are supported by a copyright permission ;
d. deal with practical and adoptable innovations by small farmers with a minimum of complicated formulas, theories and schematic diagrams ;
e. have a 50 to 100-word abstract, preferably preceding the main body of the article ;
f. are typewritten, double-spaced, about 4,000 words (approximately equivalent to 8 pages of AMA-size paper) ; and those that
g. are supported by authentic sources, reference or bibliography.

Rejected/Accepted Articles

a. As a rule, articles that are not chosen for AMA publication are not returned unless the writer(s) asks for their return and are covered with adequate postage stamps. At the earliest time possible, the writer(s) is advised whether the article is rejected or accepted.
b. When an article is accepted but requires revision/modification, the details will be indicated in the return reply from the AMA Chief Editor in which case such revision/modification must be completed and returned to AMA within three months from the date of receipt from the Editorial Staff.
c. "The AMA does not pay for articles published. However, the writers are given collectively 5 free copies (one copy air-mailed and 4 copies sent by surface/sea mail) of the AMA issue wherein their articles are published. In addition, a single writer is given 25 off-prints of the article and plural writers are given 35 off-prints (also sent by surface/sea mail)"

Procedure

a. Articles for publication (original and one-copy) must be sent to AMA through the Co-operating Editor in the country where the article originates. (Please refer to the names and addresses of Co-operating Editors in any issue of the AMA). However, in the absence of any Co-operating Editor, the article may be sent directly to the AMA Chief Editor in Tokyo.
b. Contributors of articles for the AMA for the first time are required to attach a passport-size ID photograph (black and white print preferred) to the article. The same applies to those who have contributed articles three years earlier. In either case, ID photographs taken within the last 6 months are preferred.
c. The article must bear the writer(s) name, title/designation, office/organization, nationality and complete mailing address.

Format/Style Guidance

a. Whether the article is a technical or popular contribution, lecture, research result, thesis or special report, the format must contain the following features :
   i) a brief and appropriate title ;
   ii) the writer(s) name, designation/title, office/organization ; and mailing address ;
   iii) an abstract following ii) above ;
   iv) body proper (text/discussion) ;
   v) conclusion/recommendation ; and a
   vi) bibliography
b. The pages must be numbered (Arabic numeral) successively at the top center. Tables, graphs and diagrams must likewise be numbered. Table numbers must precede table titles, e.g., "Table 1. Rate of Seeding per Hectare". Such table number and title must be typed at the top center of the table. On the other hand, graphs, diagrams, maps and photographs are considered figures in which case the captions must be indicated below the figure and preceded by number, e.g., "Figure 1. View of the Farm Buildings".
c. Tables and figures must be preceded by texts or discussions. Inclusion of such tables and figures not otherwise referred to in the text/discussion must be avoided.
d. Tables must be typed clearly without vertical lines or partitions. Horizontal lines must be drawn only to contain the sub-title heads of columns and at the bottom of the table.
e. Express measurements in the metric system and crop yields in metric tons per hectare (t/ha) and smaller units in kilogram or gram (kg/plot or g/row).
f. Indicate by footnotes or legends any abbreviations or symbols used in tables or figures.
g. Convert national currencies in US dollars and use the later consistently.
h. Round off numbers, if possible, to one or two decimal units, e.g., 45.5kg/ha instead of 45.4762kg/ha.
i. When numbers must start a sentence, such numbers must be written in words, e.g., Forty-five workers . . . , or Five tractors . . ." instead of 45 workers . . , or, 5 tractors.

Co-operating Editors

Van Lancker G B Hanna A Kandiah D. B. Ampratwun M S Chaudhry M S Choudhury J P Mittal E U Odigboh N G Kuyembeh A H Abdoun

M A Bedri A. B. Saeed I de A Nääs A L Phillips A A Valenzuela A H Mirdha M R Goyal W J Chancellor M L Esmay S M Farouk

— AFRICA —

Julien G. Van Lancker
Professor Visitor (Agricultural Engineering), University of Brundi, Brundi

George B. Hanna
Chairman, Agricultural Engineering Dept., College of Agriculture, Cairo University, Giza, Cairo, Egypt.

Arumugam Kandiah
Institute of Agricultural Research, P.O. Box 2003, Addis Ababa, Ethiopia

David Boakye Ampratwum
Part-Time Lecturer, Agricultural and Food Engineering, University of Ghana, Legon, Ghana

Muhammad Siddique Chaudhry
Assistant Professor, Department of Agricultural Engineering, Alfateh University, Tripoli, Libya

Md. Shahansha-ud-Din Choudhury
Principal Research Fellow, Dept of Agricultural Engineering, Institute for Agricultural Research, Ahmadu Bello University, P.M.B. 1044, Zaria, Nigeria

Jitendra P. Mittal
Lecturer Grade 1, Dept. of Agricultural Engineering, Ahmadu Bello University, Samaru, Zaria, Nigeria

E.U. Odigboh
Professor & Head of Agricultural Engineering Department, University of Nigeria, Nsukka, Nigeria

N.G. Kuyembeh
Dean, Faculty of Agriculture and Head, Dept. of Agric. Engineering, Njara University College, University of Sierra Leone, Sierra Leone

Abdien Hassan Abdoun
Director, General Administration for Engineering, Ministry of Agric., F & NR., Khartoum, Sudan (Until Dec., 1983: c/o The National Agric. Training Centers, Ministry of Agriculture and Water, P.O. Box 558, Riyadh, Saudi Arabia)

Mohamed A. Bedri
Director of Industrial Projects Implementation Administration (Projects Bureau), Ministry of Industry, P. O. Box 715, Khartoum, Sudan

Amir Bakheit Saeed
Lecturer, Dept. of Agricultural Engineering, Faculty of Agriculture, University of Khartoum, Khartoum, Sudan

— AMERICAS —

Irenilza de Alencar Nääs
Assistant Professor, Agricultural Engineering Dept., State University of Campinas, SP, Brazil

Allan L. Phillips
Project Manager – FAO-UNDP Project CHI/77/002 Technical Assistance to the Agric. Engineering Institute at the University of Conception, Chillan, Chile

A.A. Valenzuela
Head, Agricultural Engineering Department, University of Conception, Chillan, Chile

A.H. Mirdha
Visiting Professor, Dept. of Agricultural Engineering, Faculty of Superior Studies-Cuautitlan of the National Autonomous University of Mexico, Apdo. Postal-128, Cuautitlan de R.R., 54800 Edo. de Mexico

Megh Raj Goyal
Assistant Researcher, Agricultural Experimental Station, University of Puerto Rico, Subestación de Frutales S.R. No.2 Buzón 101, Juana Diaz, Puerto Rico

William J. Chancellor
Professor, Agricultural Engineering, University of California, Davis, California 95616, U.S.A.

Merle L. Esmay
Professor, Agricultural Engineering, Michigan State University, East Lansing, Michigan 48823, U.S.A.

— ASIA and OCEANIA —

Shah M. Farouk
Head, Dept. of Farm Power & Machinary, Bangladesh Agricultural University, Mymensingh, Bangladesh

Kshirode Chandra Roy
Senior Scientific Officer, Bangladesh Agricultural Research Institute, Joyedebpur, Dacca, Bangladesh

Manbahadur Gurung
Horticulture Extention Officer, Ministry of Development, Dept. of Agriculture, HA Bhutan P.O.HAA, Bhutan

Wang Wanjun
Chief Engineer and Vice Director of the Chinese Academy of Agricultural Mechanization Sciences, No. 1 Beishatan, Deshengmen Wai, Beijing, China

Satish Chandra
Assistant Director of Agriculture, Koronivia Research Station, Ministry of Agriculture and Fisheries, P.O. Box 77, Narsori, Fiji

A.M. Michael
Professor, Water Technology Center, Indian Agricultural Research Institute, New Delhi 110012, India

S.R. Verma
Dean, College of Agricultural Engineering, Punjab Agric. University, Ludhiana 141004, India

Siswadhi Soepardjo
Chairman, Agricultural Engineering Dept., Bogor Agricultural University, Jalan Gunung Gede, Bogor, Indonesia

Jun Sakai
Professor, Dept. of Agricultural Engineering, Faculty of Agriculture, Kyushu University 46-05, Hakozaki, Higashi-ku, Fukuoka 812, Japan

Bassan A. Snobar
Associate Professor, Faculty of Agriculture, University of Jordan, Amman, Jordan

Chang Joo Chung
Professor, Dept. of Agricultural Engineering, College of Agriculture, Seoul National University, Suwen, Korea

Paris Andreou
Associate Professor and Chairman, Department of Agricultural Economics and Business, American University of Beirut, Beirut, Lebanon

Muhamad Zohadie Bardaie
Head, Dept. of Field Engineering, Power and Machinery, Faculty of Agricultural Engineering, University of Agriculture Malaysia, Serdang, Selangor, Malaysia

Bala Krishna Shrestha
Assistant Agricultural Engineer, 4/141, Pulchowk Behind the Fire Brigade Latipur, Nepal

Allah Ditta Chaudhry
Associate Professor and Chairman of the Department of Farm Machinery and Power, University of Agriculture,

K C Roy M Gurung Wang Wanjun S Chandra A M Michael S R Verma S Soepardjo J Sakai B A Snobar C J Chung

P Andreou | M Z Bardaie | B K Shrestha | A D Chaudhry | B T Devrajani | A A Mughal | R M Lantin | C C Lee | R P Venturina | M H A Aziz

S Illangantileke | S K Kamathamby | T S Peng | G Singh | T T Pedersen | G Pellizzi | A Moens | J Kilgour

Faisalabad, Pakistan (on leave to New Zealand: Agronomy Dept., Massey University, Palmerston)

Bherulal T. Devrajani
Principal Investigator, Sind Agriculture University, Tandojam, Sind, Pakistan

A.A. Mughal
Assistant Professor, Faculty of Agricultural Engineering, Sind Agriculture College, Tandojam, Sind, Pakistan

Reynaldo M. Lantin
Dean, Institute of Agricultural Engineering and Technology, University of the Philippines at Los Baños, College, Laguna 3720, Phillipines

Chul Choo Lee
Project Engineer, Projects Department, Asian Development Bank, P.O. Box 789, Manila, Philippines

Ricardo P. Venturina
Assistant Scientist for Agricultural Research, National Science Development Board, P.O. Box 3596, Rizal, Manila, Philippines

M.H. Abdel Aziz
Professor of Irrigation Engineering and Head, Agricultural Engineering Dept., Riyadh Univ., Saudi Arabia

S. Illangantileke
Head, Department of Agricultural Engineering, Faculty of Agriculture, University of Peradeniya, Sri Lanka

Suppiah Kathirkamathamby
Head, Agricultural Engineering Research and Development Division, Dept. of Agriculture, Peradeniya, Sri Lanka

Tien-Song Peng
Specialist, Plant Industry Div. Joint Commission on Rural Reconstruction 37, Nanhai Road, Taipei, Taiwan

Gajendra Singh
Associate Professor of Agricultural Engineering, Asian Institute of Technology, Bangkok, Thailand

— EUROPE —

T.Touggaard Pedersen
Professor, Agricultural Engineering at the Royal Veterinary and Agricultural University, Copenhagen, Denmark

Giuseppe Pellizzi
Professor, Institute of Agricultural Machinery, University of Milano, Via G. Celoria 2–20133 Milano, Italy

Adrian Moens
Professor & Head, Dept. of Agricultural Engineering, Agricultural University, Dr. S.L. Mansholtlaan 12, Wageningen, Netherlands

John Kilgour
Lecturer in Engineering Drawing and Design, National College of Agricultural Engineering, Silsoe, Bedford. MK45 4DT, U.K. ■■

New Co-operating Editors

Wimala Tissa Weerakoon
(To cover Zambia)

Date of Birth: July 20, 1936
Nationality: Sri Lanka

Qualifications:

March, 1965 B. Eng. (Mechanical Engineering) Tokyo University of Technology, Japan
July, 1972 M. Phil. (Production Engineering and Management) University of Nottingham, U.K.
May, 1978 Ph.D. (Industrial Management) Brunel University, London, U.K.

Experience:

6 years experience in teaching at university, 11 years in industry, consultancy, project management, technology development, appropriate technology and R&D.

Present Position:

Manager/Director, Technology Development and Advisory Unit, University of Zambia, P. O. Box 32379, Lusaka, Zambia

K. P. Srivastava
(To cover Ethiopia)

Date of Birth: April 11, 1953
Nationality: India
Qualification:

B. Sc. (Agric. Engg.)
Allahabad Agricultural Institute University of Allahabad, India, 1976
M. Tech. (Agric. Engg.)
Soil and Water Conservation Engineering Indian Institute of Technology Kharagpur, India, 1978

Experience:

1977-81, Scientist S-1 (Water and Soil Engg.), Water Technology Centre, Indian Agricultural Research Institute New Delhi, India
1981-1982, Lecturer and Head Soil and Water Engineering Division
Department of Agricultural Engineering College of Agriculture
Addis Ababa University Ethiopia

Present Position:

Lecturer and Head
Department of Agricultural Engineering College of Agriculture
Addis Ababa University Ethiopia ■■

BACK ISSUES

(Vol. 13 No. 1, Winter 1982 ~)

AGRICULTURAL MECHANIZATION IN ASIA, AFRICA AND LATIN AMERICA (Vol. 13 No. 1, Winter, 1982)

Editorial (Yoshisuke Kishida) 9
Agricultural Engineering Technology for Developing Country Students (Merle L. Esmay) 11
Status of Agricultural Mechanization in Mexico (Ahmed Hossain Mirdha) 15
Influence of Soil-Tool Parameters on Unit Draft (S. Swain) 19
Economic Efficiency of Tractors on Punjab Farms (Parkash Mehta) . . . 22
Effect of Lug Angle of Cage Wheels on Tractive Performance of Dual Wheels under Submerged Soil Conditions (S.K. Rautaray, K.N. Singh) 27
Determination of Optimum Drying Conditions and Development of Drying Equations for Thin-Layer Drying of Parboiled Wheat (A. Chakraverty, R.T. Kausal) . . . 33
Mechanization for Modern and Traditional Agriculture in Sudan (E.S. Mahmoud) 37
Evaluation of Farmer's Competence to Maintain Farm Tractors (Sheruddin B. Bukhari) 45
Measurement of Hydraulic Properties of a Brown Flood-Plain Soil of Bangladesh (S.M. Rahman, B.C. Basak, A.K.M. Habibullah) 48
Alternative Gas-Fuel Producer for Driving Gasoline Engine (Part 1) – Charcoal Gas Producer (Jun Sakai, Yasuo Shibata) 51
Soil Crusts vs Seedling Emergence: Review (Megh R. Goyal) 62
Food Production and Rural Development in Commonwealth Countries (Nurul Islam) 79
News 81
Book Review 84

◇ ◇ ◇

AGRICULTURAL MECHANIZATION IN ASIA, AFRICA AND LATIN AMERICA (Vol. 13 No. 2, Spring, 1982)

Editorial (Yoshisuke Kishida) 9
Performance of a Tractor-Mounted Oscillating Soil Working Tool (P.V. Narayanarao, S.R. Verma) 11
Human Energy Expenditure in Manually-Operated Rice Transplanter (Md. Abdul Baqui, Reynaldo M. Lantin) 14
Sprinkler System Evaluation: A Case Report (Mahmoud H. Abdel Aziz, Mohammed Saeed Hadrat) 17
Application of Sprinkler Irrigation in the Sudan (Khamies Kajo Konda, Tawfig Fahmi Demian) 23
Influence of Selected Seedling Mat Parameters and Planting Speed on Performance of Rice Transplanter (I.K. Garg, C.P. Singh, V.K. Sharma) 27
Performance of a Simple Tractor-Mounted Deep-Hole Digger (R.D. Singh, Bhagwan Singh, K.N. Singh) 34
Development and Testing of a Manually-Operated Dung Cleaner (H.C. Joshi, D.N. Jana, D. Chaudhri) 39
A Comparative Study of Conventional and Mechanized Farming Relative to Energy Use and Cost (A.C. Srivastava) 42
Tillage Machines Combined with Moldboard Plow (Sheruddin Bukhari, Jori Istavan, Lehoczky Laszlo, Banhazi Janos) 51
Performance and Potential of Rubber Rolls in Husking Paddy (U.N. Singh) 56
Elastic and Visco-elastic Properties of Agricultural Products in Relation to Harvesting and Post-Harvest Processes (U.G.N. Anazodo) 59
Performance Evaluation of a Modified Fertilizer Applicator (K.C. Oni) 67
Status and Problems of Mechanization in Sierra Leone (N.G. Kuyembeh) . . . . . .
Forced Aeration: A Technique to Handle High Moisture Paddy under Humid Condition (Surya Nath, A.K. Ganguly) 77
News 79
New Products 81
Book Review 86

◇ ◇ ◇

AGRICULTURAL MECHANIZATION IN ASIA, AFRICA AND LATIN AMERICA (Vol.13, No.3, Summer, 1982)

Editorial (Yoshisuke Kishida) 9
A More Efficient Buffalo Plow (R.C. Fischer) 11
Performance of Harnesses Used for Draught Animals (B.P. Varshney, T.N. Mishra, Akhilesh Kumar, R.P. Singh) 15
Fuel Consumption of Tillage Implements (Sheruddin B. Bukhari, Jan Mohammad Baloch) 20
Economic Evaluation of Land Levelling (Riaz A. Khattak Mohammad Asrar, Jehangir K. Khattak, S.U. Khan) 23
Contribution of Ground Water in the Evapo-Transpiration Demand of Soybean (Glycine Max. L.) (K.M. Hassanuzzaman, S.M. Rahman, M.R. Biswas) 25
Effect of Preplanting Irrigation on Cotton Cultivation (Md. Motiur Rahman Khan) 29
Mechanization of Oil Palm Fruits Harvesting and Transportation in Malaysia (M. Zohadie Bardaie, Wan Ishak Wan Ismail) 31
Mechanization of Oil Palm Plantation Technology (Naresh Chandra Saxena) 35
A Cassava Harvester: Design Analysis and Prototype Development (E.U. Odigboh, S.F. Ahmed) 40
Design, Construction and Performance of a Jute Decorticating Machine (M.A. Mazed, K.C. Roy) . . . 53
Mechanization of Paddy Production in Malaysia (A.A. Mainul Hussain) 56
Mechanization of Family Farms in Nigeria (U.G.N. Anazodo) 59
Standardization and Quality Control in Agricultural Machinery (R.N. Sharma) 66
Paddy Straw Utilization for Bags and Mats (M.M. Kashyap, Amar Singh) 69
Calotropis procera (Ait.) R. Br. – Ak:A New and Free Source of Fibre and Renewable Hydrocarbons (Subhash S. Arora, Kiran S. Arora) 71
News 78
New Products 79
Book Review 85

◇ ◇ ◇

AGRICULTURAL MECHANIZATION IN ASIA, AFRICA AND LATIN AMERICA (Vol. 13, No. 4, Autumn, 1982)

Editorial (Yoshisuke Kishida) 9
Clearing of "Alang-Alang" Steppe Land in South Sumatra, Indonesia (Gajendra Singh, Bambang Pramudya) 11
An Automatic Cassava Planter (E. U. Odigboh) 15
Appropriate Tine Arrangement for Better Tillage and Efficient Tool Performance (Muhammad Saleh Soomro, G. Spoor R. J. Godwin) . . 21
Animal Drawn Multi-Purpose Tool Carriers (R. K. Bansal, G. E. Thierstein) 27
Use of Oil Bubbles for Estimating Flow Rates in Open Channels (Amir Bakheit Saeed) 37
Briquetting of Paddy Straw (Amar Singh, Y. Singh) 42
Deep Tube-Well Irrigation and Adoption Certain Practices for Rice Cultivation in Bangladesh (Paris Andreou, Fauzi Al-Haj, Md. Ismail Hossain) 49
High Temperature Flame Drying of Freshly Harvested Peanut Pods (A. C. Srivastava, W. K. Bilanski, P. White) 53
Cold Storage of Seed Potatoes in Paddy Straw Bags (A. K. Gupta, Amar Singh, V. Singh) 58
Costs of Owning and Operating Tractors: A Review (Sheruddin B. Bukhari) 61
Farmers' Knowledge and Facilities to Maintain Tractors on the Farms (Sheruddin B. Bukhari, Mohammad Iqbal Khan) 68
Energy Use for Crop Production in Bangladesh (Nripendra Nath Sarker, Shah M. Farouk) 71
Energy Efficiency of Power System Options for Irrigation (B. S. Pathak R. M. Engira, K. D. Mannan) 75
Tractive Power Losses in Tracks of a Tractor (Dipankar De, D. Chaudhuri, K. P. Pandey) 79
News 83
New Products 85

INQUIRY and REQUEST to AMA

Please let us know your need. We shall promptly reply them. Inquire on any catalog listed in the advertisement in this issue. We shall try our best to serve you. We welcome articles of interest to agricultural mechanization.

Fill in the reverse side of this card and send us by sealed letter.

FARM MACHINERY INDUSTRIAL RESEARCH CORP.

7–2 Kanda Nishikicho Chiyoda–ku Tokyo–Japan 101

ADVERTISED PRODUCTS INQUIRY

Product	Advertiser	Vol., No., Page

EDITORIAL REQUEST TO AMA

Your Name :

Address :

Occupation :

AGRICULTURAL MECHANIZATION IN ASIA, AFRICA AND LATIN AMERICA (Vol. 14, No. 1, Winter, 1983)
Editorial (Yoshisuke Kishida) 9
Systems Engineering in Precision Automatic Transplanting (Barney K. Huang) 11
Design of a Simple, Low-Lift, Wind-Powered Pump for Rural Use in Thailand (Desa Ahmad) 20
Anthropometric Survey of Indian Farm Workers (P. K. Gupta, A. P. Sharma, M. L. Gupta) 27
Water Conveyance for Farms and Minor Irrigation Schemes (R. C. Yadav) 31
Energy Recovery in Man-Powered Pumps (S. M. Nazrul Islam) 37
Profile of the Development of Agricultural Mechanization in China (Wang Wanjun) 41
Small Tractors in China (Kong Depeng, Ling Tongsen, Xü Guangqin) 44
Use of Combine Harvester in Malaysia (A. A. Mainul Hussain, Wan Ishak Wan Ismail) 53
A Centrifugal Impeller-Type of Sunflower Seed Decorticator (K. N. Nag, Pratap Singh, Rajash Bhandari) 55
Design-Related Physical Properties of Selected Agricultural Products (A. N. Waziri, J. P. Mittal) 59
Utilization of Rice Mill Wastes and By-Products: A Case Study in Thailand (Md. Wali Ullah) 63
Trench Silo for Bangladesh Farms (Md. Mahabubur Rahman Mollah, Ahmed Hossain Mirdha, Md. Habibur Rahman Khan) 65
Paradox of Tractorization in Pakistan (M. Yusuf Mubasher) 69
Agricultural Development and Requirement for Short Term Finance: Case Study of Binjharpur Block, Orissa (T. N. Datta, Anthony D'Costa) 77
Manual Labor Displacement with Tractorization (Bashir Ahmad) . . . 81
News 86

◇ ◇ ◇

AGRICULTURAL MECHANIZATION IN ASIA, AFRICA AND LATIN AMERICA (Vol.14, No.2, Spring, 1983)
Editorial (Yoshisuke Kishida) 9
Development of Peanut Combine Harvester (Yang-ren Hwang) 11
Tillage and Irrigation on Water Use by Wheat in Grey Terrace Soil of Bangladesh (Z. Karim, A.J.M.S. Karim, A.A. Pahlwa) 17
A Model of Field Grain Sorghum Moisture Contents (Surya Nath, William H. Johnson) 21
Modification and Testing of a Manual Rice Transplanter (Gajendra Singh, Uqaili Khalid Hussain) 25
Properties of Parboiled Rice Produced from Japanese Paddy (Toshinori Kimura) 31
Development and Evaluation of a Granular Insecticide Applicator (M. Shyam) 34
Design, Development and Testing of a Bullock-Drawn, Single-Row Seed-Cum-Fertilizer Drill (D.N. Sharma, N.K. Bansal, M.L. Jain) 37
Accuracy of Measurement of Soil Water by Neutron Probe (Md. Abdur Rab) 41
Pneumatic Separator for Various Rice Fractions (P.K. Chattopadhyay, Prem Chand, T.C. Mishra, N.D. Patil) 49
Development of Wheel Pump for Low-Lift Irrigation (Choudhury Md. Amiruddin Khan) 55
Survey on Traditional Methods of Harvest and Post-Harvest Practices (K.V. Selvaraj, V. Subramanian) . . 59
Status of Selected Tillage Implements on Progressive Farms in Pakistan (Muhammad Afzal, Usman Mustafa, Tanvir Ahmad) 62
Implications of Farm Mechanization for Employment, Productivity and Income (Bashir Ahmad) 65
Performance Study of a Solar Cooker (Kedar N. Nag, A.N. Mathur) 69
Stabilization of Rice Bran by Conduction and Humid Heat Treatments (A. Chakraverty, N.C. Patel) 72
Use of Wind Power in New Zealand: Its Scope in Pakistan (Shamsuddin A. Mahar) 77
News 82
Book Review 85

INDEX TO ADVERTISERS

EIMA 5
Iseki & Co., Ltd. 2
Kubota, Ltd. 6
Mametora Agric. Machinery Co., Ltd. 94
Ohashi Agricultural Machinery Mfg. Co., Ltd. . . 93
Sukigara Agricultural Machinery Co., Ltd. 92
Taiwa Noki Co., Ltd. 93
Tokai Industry Co., Ltd. 92
Toyosha Co., Ltd. 4
Yamamoto Mfg. Co., Ltd. 5

TOKAI, ALL-ROUND MAKER OF PREVENTIVE AND EXTERMINATING MACHINES

Power Sprayer Model TS-25 — Knapsack Man-power Sprayer Model H-1

With 35 years' history of manufacturing and credit of users, Tokai is a most outstanding company in Japan which has specialized all along in the manufacture of preventive and exterminating machines. We produce hand-operating sprayers of some 20 kinds ranging from pack to shouldering models. In the area of power sprayers we turn out some 12 kinds ranging from the super light-weight and mini-size to all of the standard size as well as large-size power sprayers Tokai has put on the market lately some 10 kinds of speed sprayer - the Apolo series speciaily designed for use for orchards.

TOKAI SPRAY MACHINE CO.,LTD.

Head Office and Factory: 32, Midorien, Ogaki City, Gifu-pret., 503 Japan.
phone: 0584-78-6131(R)
telex: 0-4793-678 TOKAIS J
cable adress: "TOKAISPRAY" OGAKI JAPAN

SUKIGARA CULTIVATOR & RIDGER

IMPLEMENTS & ATTACHMENTS FOR TRACTORS

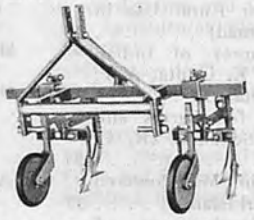

Double-Row Cultivator TBC (Tool Bar & Cultivator)

Triple-Row Ridger TCRM

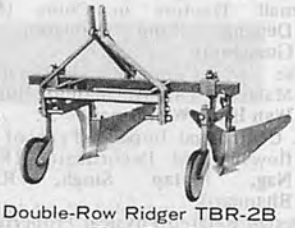

Double-Row Ridger TBR-2B (Tool Bar & Ridger)

SUKIGARA AGRICULTURAL MACHINERY CO., LTD.

YAHAGI-CHO, OKAZAKI-CITY, AICHI PREF., 444 JAPAN
TEL OKAZAKI (0564)31-2107
TELEX·····4537-526 SUKICO J (ITT)
CABLE ADDRESS; "SUKIGARA" OKAZAKI. JAPAN

Japanese Agricultural Machinery Catalogue '83

This bi-annual Catalogue is published in odd-numbered years. This 1981 edition introduces the latest models and designs of Japanese agricultural machines, equipment and facilities in 154 color and black/white photographs in 36 pages. Detailed specifications of each product are provided in 127 pages. It lists 300 leading machinery manufacturers in a directory that is conveniently indexed by trade and brand names of the product.

Other features in Japanese include recent breakthroughs and innovations incorporated in the design and functions of the new models.

The catalogue measures 18 cm x 25.6 cm, in limp cover and sells for ¥6,800 (sea mail) and ¥7,800 (air mail).

SHIN-NORINSHA CO., LTD.
7-2 chome, Kanda Nishikicho, Chiyoda-ku, Tokyo 101 Japan

A line-up of superb, compact agricultural machines from Ohashi

AR-551·651
CULTIVATOR

HR-650
HAMMER-ROTOR

SB-77
PASTURE MOWER

SM-602
AUTO MOWER

OHASHI AGRICULTURAL MACHINERY MFG. CO, LTD.

Head Office: Jojima-cho, Mizuma-gun, Fukuoka-ken, 830-02, Japan Tel. 09426-2-3161~4 Telex: 7428-34 HIFAX: 2-6078

TAIWA

ONE-PASS RICE PEARLER

"ASAKAZE"

SHINING WHITE RICE GIVES YOU GOOD TASTE WITHOUT BROKENS

A-2S

LOW-TEMPERATURE RICE POLISHING
Powerful cooling fan makes sure "Low-temperature polishing and whitening process", which gives the rice good taste.

SHINING PEARL RICE
Well-designed polishing roll and bran discharge screen give beautiful white rice.

SOFT RICE EARLY-HARVESTED GET ALSO GOOD POLISHING
Low-speed revolution mechanism gets uniform pressure which reduce damaged rice and brokens.

VACUUM-COOLED BRAN DISCHARGE FAN AND CYCLONE GATHERS ALL THE BRAN

Specifications :

Model	Tank Capacity	Power	Output/hr	Dimension			Weight
				Length	Width	Height	
A-2S	60 kg	2 hp	150–180 kg	96 cm	58 cm	67 cm	45 kg

TAIWA NOKI CO.,LTD. 43 Seki-machi, Toyama-city, Japan Tel.: 0764-29-4584

MAMETORA DEDICATES TO AGRI

It is the motto of MAMETORA that we manufacture goods in order to meet customer's benefits with originality' trusty and hearty. In addition to the head office in Okegawa' Kisakata Factory has been established. Now that we have formed the much steadier basis as a comprehensive manufacturer. We are always making efforts to manufacture goobs of high quality and are pleased to devote ourselves to the food industry in the world as well as that in Japan.

MAMETORA AGRIC. MACHINERY CO., LTD.

HEAD OFFICE ADD: 9-37, NISHI-2 CHOME, OKEGAWA-SHI, SAITAMA-KEN, JAPAN.
TELEPHONE: 0487-71-1181 TELEX: 2922561 MAMETO-J

CULTURE ALL OVER THE WORLD

○ Preeminent above the rest for economical efficiency. Rational design. Nothing but small-sized agricultural machinery displays opration efficiency like this.

This is the first Full Automatic Transplanter TPA-1 that Engineering Division of Mametora Noki Co., Ltd. has developed for the first time in the world.
This is cassette type transplanter only to put in seedling boxes. Suitable for Chinese cabbage, lettcue, cabbage and cauliflower.

Tobacco transplanter that is mostly used for trans planting tobacco in Japan.

Plowing operation by Mametora Tiller.

Oil pressure is largely introduced to this planter, and so this Mametora Planter is easy to use. This can be used for planting all Kinds of seedlings from small to large.

Operation in a greenhouse by Return Cultivator SR Type. This has wide application for seedbed, ridge and cultivation in orchards.