International specialized medium for agricultural mechanization in developing countries

ISSN 0084-5841

AMA

AGRICULTURAL MECHANIZATION IN ASIA, AFRICA AND LATIN AMERICA

VOL.XIV, NO.3, SUMMER 1983

FARM MACHINERY INDUSTRIAL RESEARCH CORP.

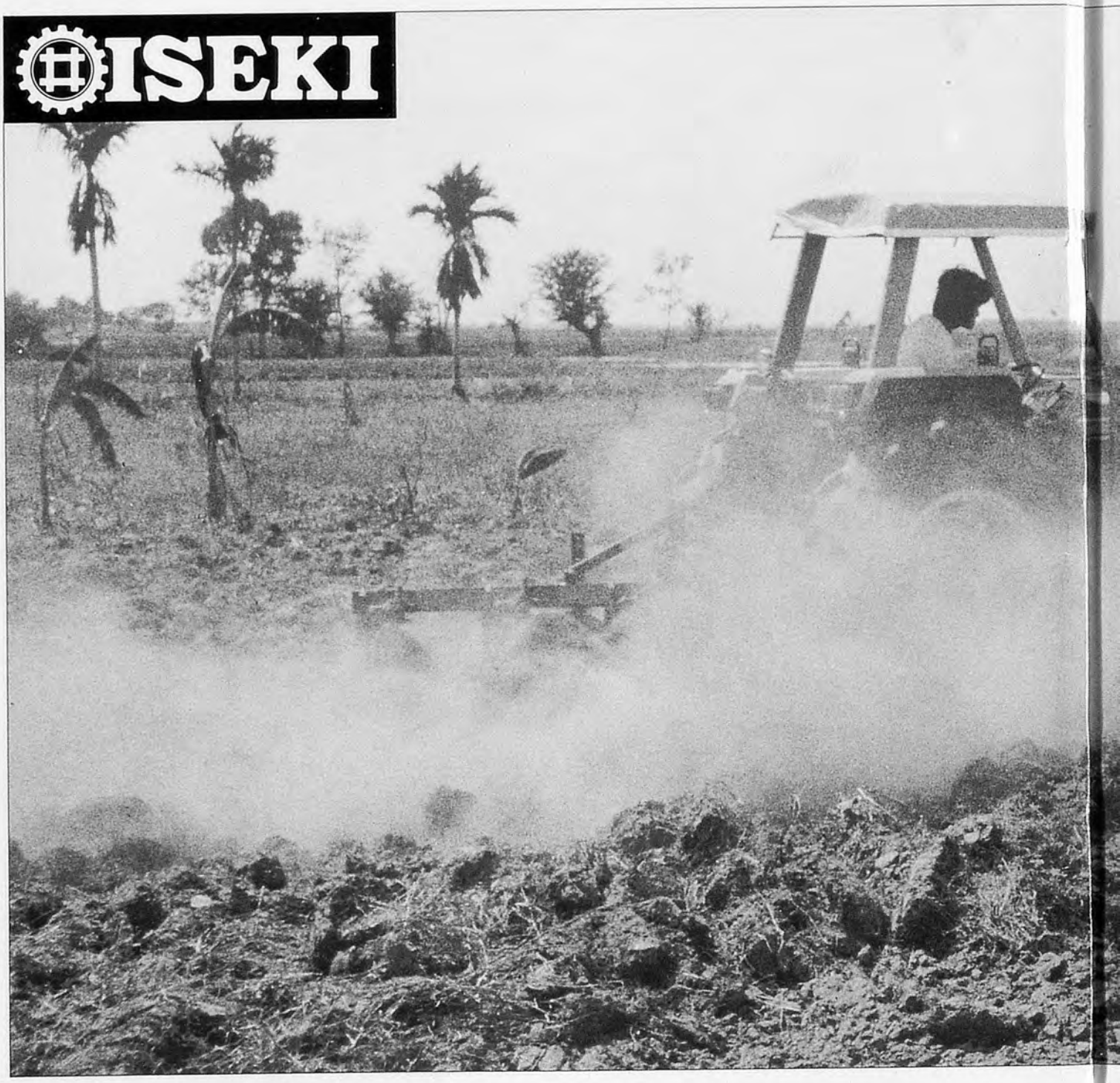

Contributing to the mechanized farming, Iseki works its way.

The survival of a nation depends on how well its agriculture meets the needs of its people.

Since 1926, Iseki has devoted itself to developing agricultural equipment and technology capable of insuring our well-being and survival.

By developing unique farming technology, and striving for superior quality and improved technical services, Iseki promotes its vision of "better farming everywhere."

Iseki is concerned . . . and stands ready to share and communicate with all those engaged in improving the world through agriculture.

ISEKI & CO., LTD.

Foreign Affairs Division
3-6, Kioi-cho, Chiyoda-ku, Tokyo, 102 Japan
Cable Address: ISEKIRICE TOKYO
Telex: 232-2752, 232-2753
Phone: (03) 238-5245~5260

A line-up of superb, compact agricultural machines from Ohashi

AR-551·651
CULTIVATOR

HR-650
HAMMER-ROTOR

SB-77
PASTURE MOWER

SM-602
AUTO MOWER

OHASHI AGRICULTURAL MACHINERY MFG. CO, LTD.
Head Office: Jojima-cho, Mizuma-gun, Fukuoka-ken, 830-02, Japan Tel. 09426-2-3161~4 Telex: 7428-34 HIFAX: 2-6078

TAIWA
ONE-PASS RICE PEARLER
"ASAKAZE"

SHINING WHITE RICE GIVES YOU GOOD TASTE WITHOUT BROKENS

LOW-TEMPERATURE RICE POLISHING
Powerful cooling fan makes sure "Low-temperature polishing and whitening process", which gives the rice good taste.

SHINING PEARL RICE
Well-designed polishing roll and bran discharge screen give beautiful white rice.

SOFT RICE EARLY-HARVESTED GET ALSO GOOD POLISHING
Low-speed revolution mechanism gets uniform pressure which reduce damaged rice and brokens.

A-2S

VACUUM-COOLED BRAN DISCHARGE FAN AND CYCLONE GATHERS ALL THE BRAN

Specifications :

Model	Tank Capacity	Power	Output/hr	Dimension			Weight
				Length	Width	Height	
A-2S	60 kg	2 hp	150–180 kg	96 cm	58 cm	67 cm	45 kg

TAIWA NOKI CO.,LTD. 43 Seki-machi, Toyama-city, Japan
Tel.: 0764-29-4584

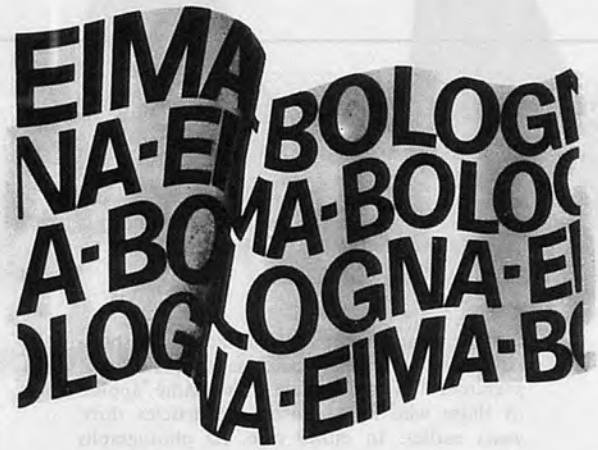

BOLOGNA
16-20 NOVEMBRE 1983

Admission by invitation:
16-17-18 November

Admission to public:
19-20 November

international exhibition of agricultural machinery manufacturers

exhibition of gardening machinery

Organized by **PROMOZIONI UNACOMA S. p. A.**
with the collaboration of the ENTE AUTONOMO FIERE DI BOLOGNA

for further details :

eima 00161 ROMA-VIA L. SPALLANZANI 22/A
TEL. (06) 855787 TELEX 614126 -TELEGRAMMI (UNACOMA-ROMA)

Niplo AGRICULTURAL MACHINERY

Rotary Tiller : DC-2000
The side drive system increases durability and makes complete tilling a certainty.
With the perfectly waterproof mechanism, it can be used in paddy fields.

Model DC-2000(60~100ps)

Reversible Plow : TR-255F
Reversing and width control of bottom can be easily operated by a single shifting of the handle.
Unique share shape reduces draft force and makes a small tractor as efficient as a big one.
Because of the differencial effect of moldboard fingers, soil is ideally inverted.

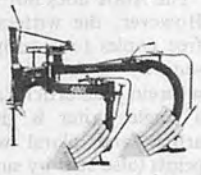

Model TR-255F(20~28ps)

Digger : D-653S
Highly elfective in digging root crops such as potatoes, onions and bulbs.
Specially designed share effectively scoops soil and crops.
Soil and crops are completely separated while they are conveyed backward by the swinging conveyer.

Model D-653S(25~35ps)

MATSUYAMA PLOW MFG. CO.,LTD.

2949, Shiokawa, Maruko-machi, Nagano-ken, 386-01 Japan

A NOTE TO AMA CONTRIBUTORS

The Editorial Staff of the AMA requests contributors of articles for publication to observe the following editorial policy and guidelines in order to improve communication and to facilitate the editorial process :

Criteria for Article Selection

Priority in the selection of articles for publication is given to those that –

a. are written in the English language ;
b. are relevant to the promotion of agricultural mechanization, particularly for the developing countries ;
c. have not been previously published elsewhere, or, if previously published are supported by a copyright permission ;
d. deal with practical and adoptable innovations by small farmers with a minimum of complicated formulas, theories and schematic diagrams ;
e. have a 50 to 100-word abstract, preferably preceding the main body of the article ;
f. are typewritten, double-spaced, about 4,000 words (approximately equivalent to 8 pages of AMA-size paper) ; and those that
g. are supported by authentic sources, reference or bibliography.

Rejected/Accepted Articles

a. As a rule, articles that are not chosen for AMA publication are not returned unless the writer(s) asks for their return and are covered with adequate postage stamps. At the earliest time possible, the writer(s) is advised whether the article is rejected or accepted.
b. When an article is accepted but requires revision/modification, the details will be indicated in the return reply from the AMA Chief Editor in which case such revision/modification must be completed and returned to AMA within three months from the date of receipt from the Editorial Staff.
c. "The AMA does not pay for articles published. However, the writers are given collectively 5 free copies (one copy air-mailed and 4 copies sent by surface/sea mail) of the AMA issue wherein their articles are published. In addition, a single writer is given 25 off-prints of the article and plural writers are given 35 off-prints (also sent by surface/sea mail)"

Procedure

a. Articles for publication (original and one-copy) must be sent to AMA through the Co-operating Editor in the country where the article originates. (Please refer to the names and addresses of Co-operating Editors in any issue of the AMA). However, in the absence of any Co-operating Editor, the article may be sent directly to the AMA Chief Editor in Tokyo.
b. Contributors of articles for the AMA for the first time are required to attach a passport-size ID photograph (black and white print preferred) to the article. The same applies to those who have contributed articles three years earlier. In either case, ID photographs taken within the last 6 months are preferred.
c. The article must bear the writer(s) name, title/designation, office/organization, nationality and complete mailing address.

Format/Style Guidance

a. Whether the article is a technical or popular contribution, lecture, research result, thesis or special report, the format must contain the following features :
   i) a brief and appropriate title ;
   ii) the writer(s) name, designation/title, office/organization ; and mailing address ;
   iii) an abstract following ii) above ;
   iv) body proper (text/discussion) ;
   v) conclusion/recommendation ; and a
   vi) bibliography
b. The pages must be numbered (Arabic numeral) successively at the top center. Tables, graphs and diagrams must likewise be numbered. Table numbers must precede table titles, e.g., "Table 1. Rate of Seeding per Hectare". Such table number and title must be typed at the top center of the table. On the other hand, graphs, diagrams, maps and photographs are considered figures in which case the captions must be indicated below the figure and preceded by number, e.g., "Figure 1. View of the Farm Buildings".
c. Tables and figures must be preceded by texts or discussions. Inclusion of such tables and figures not otherwise referred to in the text/discussion must be avoided.
d. Tables must be typed clearly without vertical lines or partitions. Horizontal lines must be drawn only to contain the sub-title heads of columns and at the bottom of the table.
e. Express measurements in the metric system and crop yields in metric tons per hectare (t/ha) and smaller units in kilogram or gram (kg/plot or g/row).
f. Indicate by footnotes or legends any abbreviations or symbols used in tables or figures.
g. Convert national currencies in US dollars and use the later consistently.
h. Round off numbers, if possible, to one or two decimal units, e.g., 45.5kg/ha instead of 45.4762kg/ha.
i. When numbers must start a sentence, such numbers must be written in words, e.g., Forty-five workers . . . , or Five tractors . . ." instead of 45 workers . . , or, 5 tractors.

International specialized medium for agricultural mechanization in developing countries

AMA

AGRICULTURAL MECHANIZATION IN ASIA, AFRICA AND LATIN AMERICA

VOL.XIV, NO.3, SUMMER 1983

Edited by

YOSHISUKE KISHIDA

Published quarterly by

Farm Machinery Industrial Research Corp.

in cooperation with

The Shin-Norinsha Co., Ltd.

and

The International Farm Mechanization Research Service

TOKYO

Yoshisuke Kishida, Publisher & Chief Editor
Yoshikuni Kishida, Advisory Director

Contributing Editors and Cooperators

- AFRICA -
Van Lancker, Julien G. (Brundi)
Hanna, George B. (Egypt)
Kandiah, Arumugam (Ethiopia)
Srivastava, K.P. (Ethiopia)
Ampratwun, David Boakye (Ghana)
Chaudhry, Md. Siddique (Libya)
Choudhury, Md. Shahansha-ud-Din (Nigeria)
Mittal, Jitendra P. (Nigeria)
Odigboh, E.U. (Nigeria)
Kuyembeh, N.G. (Sierra Leone)
Abdoun, Abdien Hassan (Sudan)
Bedri, Mohamed A. (Sudan)
Saeed, Amir Bakheit (Sudan)
Weerakoon, W.T. (Zambia)

- AMERICAS -
Nääs, Irenilza de Alencar (Brazil)
Phillips, Allan L. (Chile)
Valenzuela, A.A. (Chile)
Mirdha, A.H. (Mexico)
Goyal, Megh Raj (Puerto Rico)
Chancellor, William J. (U.S.A.)
Esmay, Merle L. (U.S.A.)

- ASIA and OCEANIA -
Farouk, Shah M. (Bangladesh)
Roy, Kshirode Chandra (Bangladesh)
Gurung, Manbahadur (Bhutan)
Wang, Wanjun (China)
Chandra, Satish (Fiji)
Michael, A.M. (India)
Verma, S.R. (India)
Soepardjo, Siswadhi (Indonesia)
Sakai, Jun (Japan)
Snobar, Bassan A. (Jordan)
Chung, Chang Joo (Korea)
Andreou, Paris (Lebanon)
Bardaie, Muhamad Zohadie (Malaysia)
Shrestha, Bala Krishna (Nepal)
Chaudhry, Allah Ditta (Pakistan)
Devrajani, Bherulal T. (Pakistan)
Mughal, A.A. (Pakistan)
Lantin, Reynaldo M. (Philippines)
Lee, Chul Choo (Philippines)
Venturina, Ricardo P. (Philippines)
Aziz, M.H. Abdel (Saudi Arabia)
Illangantileke, S. (Sri Lanka)
Kathirkamathamby, Suppiah (Sri Lanka)
Peng, Tien-Song (Taiwan)
Singh, Gajendra (Thailand)

- EUROPE -
Pedersen, T. Touggaard (Denmark)
Pellizzi, Giuseppe (Italy)
Moens, Adrian (Netherlands)
Kilgour, John (U.K.)

EDITORIAL STAFF
(Tel. 03/291-5718)
Yoshisuke Kishida, Chief Editor
Kensuke Sakurai, Managing Editor
Yoshinori Sasaki, Assistant Editor
Noriyuki Muramatsu, Assistant Editor

ADVERTISING
(Tel. 03/291-3672)
Kuniharu Ikeda, Manager (Head Office)
Shuji Kobayashi, Manager (Branch Office)
Advertising Rate: 300 thousand yen per a page

CIRCULATION
(Tel. 03/291-5718)
Soichiro Fukutomi, Manager
Editorial, Advertising and Circulation Headquarters,
7, 2-chome, Kanda Nishikicho, Chiyoda-ku, Tokyo, 101 Japan

Copyright © 1983 by
FARM MACHINERY INDUSTRIAL RESEARCH CORP.
SHIN-NORIN building
7, 2-chome, Kanda Nishikicho, Chiyoda-ku, Tokyo, 101 Japan
Printed in Japan

This is the 40th issue since the issue, Spring of 1971

EDITORIAL

Trade-off Between Farm Mechanization – Prices of Farm Products

One of the most disturbing problems that stand in the way of an expanded agricultural mechanization drive in many of the developing countries is the trade-off between farm mechanization and prices of farm products. Simply put, the small farmers who represent the majority, are not making enough from the sale of their farm products to enable them to invest in farm machinery. Conversely, the farm machines are priced beyond the reach of the farmers. Until a trade-off is attained, the problems will continue to persist as a vicious cycle – low farm productivity and low prices of farm products borne of inadequate farm inputs, particularly the use of efficient farm machinery.

Of course, the issue cuts deeper than the economics of it. For example, government farm policies in many developing countries need to be attuned to down-to-earth realities, i.e., they need to be re-examined and made more responsive to changing needs of farming. And clearly, this is a government responsibility. On the other hand, the farm machinery industry is being called upon to re-examine also their price policies for their products. But it is not wishful thinking if the ideal thing should happen: dialogues between government policy-makers, on the one hand, and farm machinery manufacturers/distributors, on the other. Dialogues along the trade-off issue should benefit not only both parties but, most important of all, the farmers whose need for the use of farm machines in order to raise productivity and get better prices for their products, is long overdue.

A previous AMA editorial has aptly described that over the last decade, the growth or progress in agricultural mechanization in most developing countries has not only been slow but also anomalous – relatively fast in a few countries but lagging behind in many others. Of course, no one should expect an even growth in the face of vast differences in the make up of the countries: their historical past, type of government, culture, value systems, etc. About the only common factor among these countries is the lack of adequate economic analysis that could convincingly explain the disparity in growth of farm mechanization in those countries.

All that his editorial is leading to is a challenge to i) governments to re-examine their farm policies; ii) the farm manufacturers/distributors to be more realistic in pricing their products; and iii) the researchers/scientists to cut deep into the trade-off phenomenon and explain in uncertain terms what must be the trade-off or why a trade-off, after all, may never be really attained between agricultural mechanization and farm product prices.

Chief Editor
Yoshisuke Kishida

July, 1983
Tokyo

CONTENTS

AGRICULTURAL MECHANIZATION IN ASIA, AFRICA AND LATIN AMERICA

Vol. XIV, No.3, Summer, 1983

Yoshisuke Kishida	9	Editorial
Yoshiaki Nakamura Haruhiko Murase Sakae Shibusawa	11	Direct Seeding with Coated Rice in Submerged Paddy Field (1)
R.D. Singh Bhagwan Singh K.N. Singh	15	Evaluation of IRRI-Pantnagar Bullock-Drawn, Six-Row Paddy Seeder
V.K. Tewari R.K. Datta	21	Development of a Wetland Seeder from Mechanical and Ergonomical Considerations
G.S. Sheikh Khalid Pervez J.K. Sial Muhammad Afzal Abdul Ghafoor Ansari Muhammad Yasin	28	A Progressive Approach to Minimum Tillage
Gajendra Singh Pinai Thongsawatwong	33	Evaluation and Modification of Two Peanut Shellers
T.B.S. Rajput Ashwani Kumar	41	Renewable and Non-renewable Resources in Irrigation Pumping
J.C. Igbeka	45	Selecting and Adapting Farm Machinery to Rural Conditions
M. Majumder R.K. Datta	49	Kinematics of Single Rotary Blade in Rice Harvesting Machine
B.D. Shukla T.P. Ojha C.P. Gupta	52	Engineering Properties of Rice Husk Boards
Md. Quamrul Islam Obaidul Islam	59	Effect of Vane Inclination on Performance of Radial Vane Centrifugal Pump
Edmundo J. Hetz Arthur Gold Luke E. Reese	62	Computer Prediction of Suitable Workdays for Mechanized Winter Wheat Operations in Chile
Khwaja Altaf Hussain Abdul Shakoor Khan A.D. Chaudhry	67	Tillage Practices in Mechanized Farms in Pakistan
Tien-song Peng	71	The Development of Agricultural Mechanization and its Strategies in Taiwan
O.P. Kataria	75	Status and Scope of Wheat Production in Nigeria
News	81	
Book Review	84	

★ ★ ★

A Note to AMA Contributors 6
Co-operating Editors 86
Back Issues 88
Index to Advertisers 89

Direct Seeding with Coated Rice in Submerged Paddy Field (1)

by
Yoshiaki Nakamura
Professor

Haruhiko Murase
Assistant Professor

Sakae Shibusawa
Assistant Professor

Agricultural Engineering Department, Ishikawa Prefectural College of Agriculture, 33 Suematsu, Nonoichi, Ishikawa-ken, Japan

Abstract

The rice transplanting operation aided with conventional power transplanters is a well-adopted technique among rice growers in Japan. A new cultivation system called Direct Seeding with Coated Rice in Submerged Paddy (DSSP System) has been developed. The DSSP system is a systematic modification of the conventional, non-transplanting type cultivation techniques. A successful operation of the DSSP system currently requires rice drilling equipment, coating machine and chemicals necessary for the preparation of rice seeds, and pyrazolate herbicide for initial weed controls. Key features of the DSSP system and remarkable results obtained from trial operations of the DSSP will be discussed in this article. Details of the DSSP system and its know-how will be reported in the next instalment of this report.

Introduction

The technical advancement in rice cultivation systems prominently characterized by the wide-spread use of power rice planters and head feed combines has been nearly accomplished in Japan. What can be done to make rice production more profitable? As a possibility, farmers could expand their management scale. However, most readily available land for rice cultivation is already in production in Japan. The alternative is that farmers turn increasingly to intensification of farming on their available land as a primary strategy to increasing total income. The current rice production system must be reviewed to create specific challenges for all participants in the system. The Japanese leading rice cultivation system includes the transplanting process which has been operated successfully with well-engineered power transplanters. According to the official statistics, more than 25% of the total working hours for the rice production is spent for the process of transplanting and preparation of rice seedlings.

An alternative to the transplanting technique is direct seeding method. The use of direct seeding technique could reduce labor needs by more than 20% in terms of working hours. The direct seeding method is an old practice in Japan. The direct seeding type cultivation in Japan, however, has been practised in limited area. Less than 2% of the total land for rice cultivation is utilized for some kinds of direct seeding type cultivation. The conventional direct seeding technique involves various difficulties and problems such as weed control, protection from cold injury and bird damage, poor seedling growth, poor lodging resistance, and so forth. Finding ways to solve these problems is a key to labor-saving technique, hence the DSSP System was developed.

The DSSP system is a technical breakthrough since it eliminates most of the problems involved in conventional non-transplanting type rice cultivation techniques. The submerged soil condition helps to prevent seeds from cold injury and bird loss. The water suppresses weed growth. Seeds planted in the soil can establish more rigid root system to resist lodging than those that are sown on the soil surface. The recent success of the DSSP was accomplished by developing specially engineered seeding machines that replace rice transplanters, and the coating chemical sold by the name of Calper that is used to supply oxygen to rice seeds to enable them to germinate even when submerged in the soil. A development of pyrazolate herbicide (Sun Bird) that controls weed in the period of rice seedling emergence also contributed to stabilizing the performance of the new technique. The new technique

is a minor modification of rice cultivation practice in a view of overall rice production system, however, it gives a major potential of savings of energy and labor requirements.

This article provides a brief description of the features of the DSSP system, and its evaluation based on results obtained from trial operations.

The DSSP System

Fig. 1 shows the main process of rice cultivation implementing the DSSP system. The distinctive procedures of the DSSP are schematically indicated in the portion enclosed by dotted lines. The use of coating machine promises successful application of the coating chemical on rice seeds. When no coating machine is available in hand, the seed coating can be performed manually with a little skill. **Fig. 2** shows a coating machine (90 cm in diameter) capable of processing 15 kg of dry seeds in 15 minutes. The coating chemical contains calcium peroxyde as an active ingredient which reacts with water to produce oxygen. The optimum amount of coating chemical is about the same amount of seeds to be sown at weight basis. Insufficient application of the chemical causes a failure of germination and/or emergence of seedlings for lack of oxygen.

The seeding depth is highly critical since the lodging resistance and emergence strength depend upon seeding depth as shown in **Fig. 3**. The optimum seeding depth is about 1 cm. Seeding operation with the required precision can be achieved by the use of a rice seeding machine. Various types of rice seeding machines designed for the DSSP use are currently sold in the market. A riding type 8-row seeding machine and a walking type 6-row seeding machine are shown in

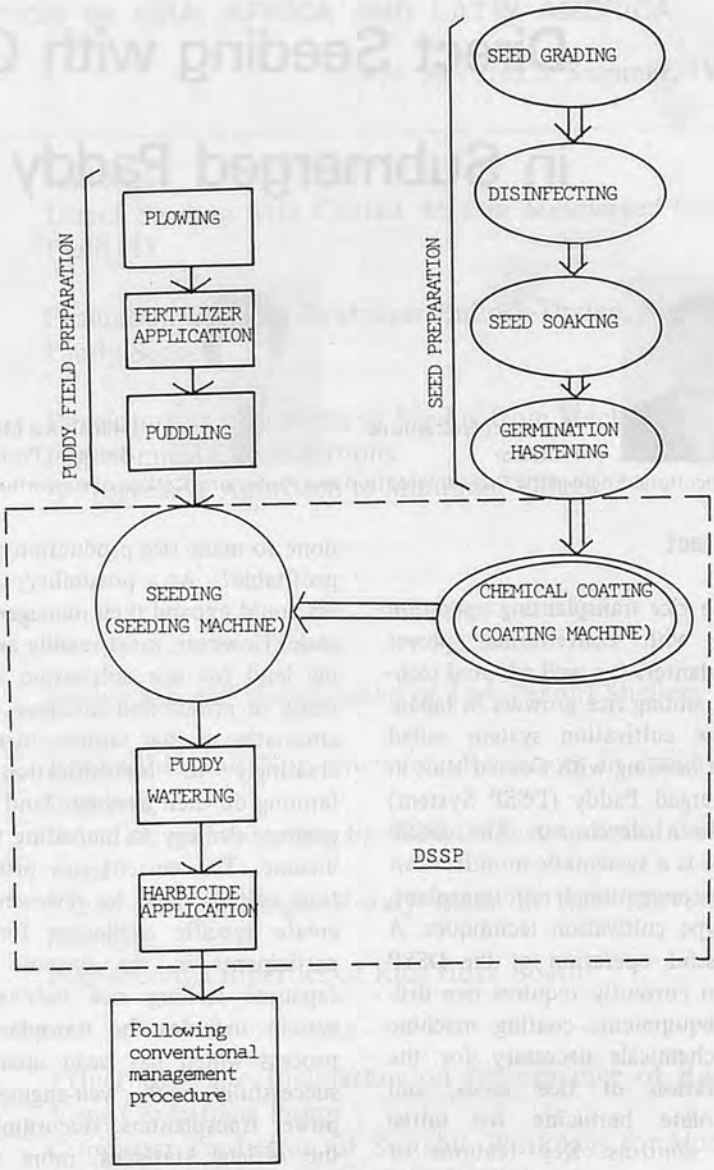

Fig. 1 Schematic flow diagram of the DSSP system.

Fig. 4. The average performance of these seeding machines is about 30 minutes per 10 acres to complete seeding. Rice seedlings in paddy is very sensitive to ordinary herbicides. Maximum care should be given to initial control of grass weeds. A newly developed pyrazolate herbicide has a broad spectrum against annual and perennial grasses and causes no phytotoxicity on rice plants. The effective use of pyrazolate herbicide is recommended for successful implementation of the DSSP system.

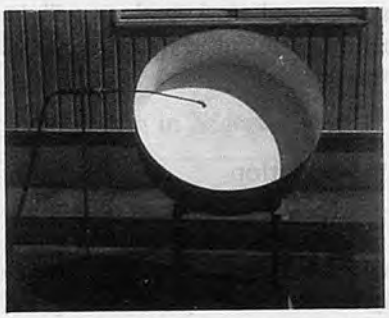

Fig. 2 Rice seeds can be coated effectively and easily with Calper dust by coating machine.

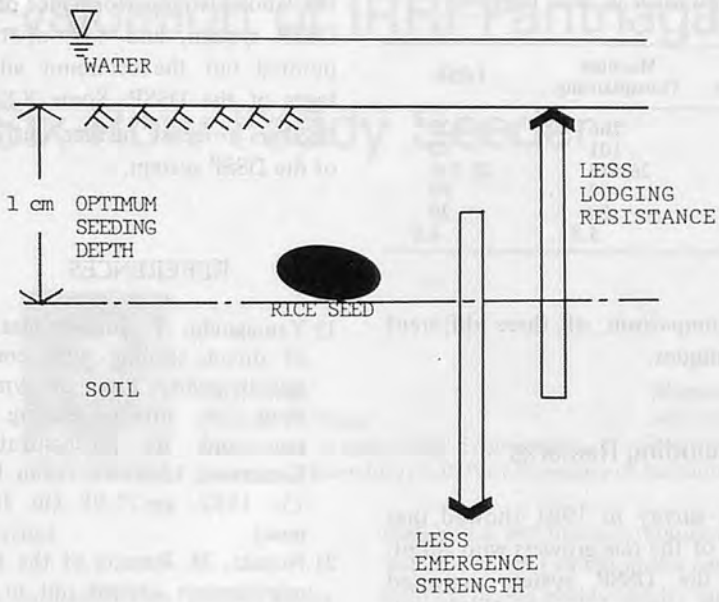

Fig. 3 Rice seeds should be planted at about 1 cm deep in the soil.

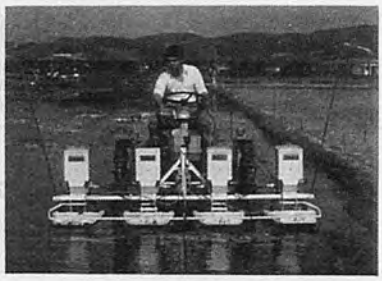

Fig. 4A Riding type 8-row drill.

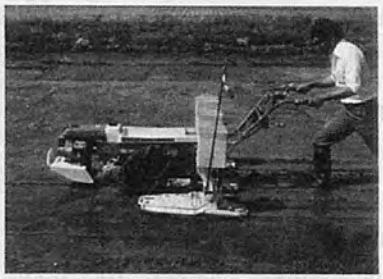

Fig. 4B Walking type 6-row drill.

System Performance Data[1,2)]

Table 1 shows a comparison of the DSSP system with conventional transplanting technique in terms of their labor requirements. The results were obtained from independent trial operations in 1981 (Kumamoto Pref., Japan). A walking type, 6-row seeding machine and a coating machine were used in those operations. The results indicate that the DSSP system reduced labor input by more than 20%. As illustrated in **Fig. 1**, there is no difference between the conventional transplanting technique and the technique involving the DSSP system from a view point of the entire rice production system except the fact that the procedures of transplanting and seedling nursery are replaced by the seeding machine and the coating procedure. The data shown in **Table 1** evidence that transplanting operation required 10 to 11 times more labor hours than the seeding operation. It should be noted that supplemental planting is needed in the DSSP when too much uneven emergence appears in the field. The difference of the labor efficiency between No.1 and No.2 in **Table 1** is due to their management scale difference in acreage. The acreage of No.2 is more than twice that of No.1. No labor efficiency can be expected on seedling nursery which is an unavoidable process involved in the

Table 1 Comparison of Labor Requirement of DSSP System and Transplanting Technique (hr/ha)

Treatment	I		II	
	DSSP	Trans-plant	DSSP	Trans-plant
Pretreatment of seeds	3 %	5 %	5 %	5 %
Nursery for seedlings	0	45	0	57
Plowing and puddling	39	65	35	35
Basal dressing	23	34	10	10
Planting rice seeds in the soil (DSSP)	5	0	5	0
Transplanting rice seedlings (conventional)	0	52	0	58
Top dressing	19	6	22	22
Weeding	18	67	25	25
Water management	50	81	23	23
Pest and disease control	36	43	34	34
Harvesting	230	165	19	19
Processing	54	52	22	22
Total	474	615	197	313
DSSP/transplant	78	100	63	100

Table 2 Comparison of Income Rate between DSSP and Conventional Transplanting System (US$/ha)

	I		II	
	DSSP	Conventional	DSSP	Conventional
Seeds or seedlings	70	70	60	70
Fertilizer	540	460	570	570
Chemicals	710	400	520	460
Other expenses	3 260	3 470	2 790	3 090
Total production expenses	4 580	4 400	3 940	4 190
Gross income	9 350	5 840	7 520	6 970
Net income	5 930	3 090	4 040	3 500
Income rate	(63%)	(53%)	(54%)	(50%)

Table 3 Comparison of Yield and Yield Components based on Three Different Cultivation Methods

	Manual Transplanting	Machine Transplanting	DSSP
Panicle number per m²	230	266	322
Spikelet number per panicle	115	101	92
Spikelet number per m²	23 379	26 813	29 536
Rate of ripen grains (%)	69	77	69
Weight of 1 000 grains (g)	29	28	29
Yield* (t/ha)	4.6	5.8	6.0

* Moisture content 14%

conventional transplanting type cultivation technique. An evaluation of the DSSP system based on its economics can be drawn from **Table 2**. Ten percent up in income rate for the case I resulted from the DSSP system. For the case II, the income rate for the DSSP is 4% more than the conventional transplanting method. The DSSP system has been also tested in Malaysia in 1981. **Table 3** reveals the high performance of the DSSP system by showing the best yield in comparison of three different techniques.

Concluding Remarks

A survey in 1981 showed that 33% of the rice growers who adopted the DSSP system reported 0.5 t/ha of increase in yield with the first grade quality proof compared with the transplanting cultivation. Ninety percent of those who operated the DSSP appreciated the labor saving performance of the DSSP system, and 44% of them pointed out the economic advantages of the DSSP. Some 82% of DSSPers forecast further outreach of the DSSP system.

REFERENCES

1) Yamaguchi, T. Implementation of direct seeding with coated rice in paddy. Proc. of Symposium on direct seeding of rice and its mechanization. Kanazawa, Ishikawa, Japan. Oct. 15, 1982. pp.75-98 (in Japanese).
2) Nozaki, M. Results of the field experiments carried out in the on-farm experimental fields in the off season in 1981. Quartery report No.8. Tropical Agricultural Research Center, Alon Ster, Malaysia. 1981. ■■

Is your Agricultural Machinery Industry faced with problems of development and growth?

We can provide you with know-how to help your company and industry develop and grow.

Specific Information Service.

Statistics, Product Information, Patents, Test & Research Data, References and Directory.

Survey & Research.

Marketing Research, Forecasting on Economic, Technical, Supply, Demand, etc. and Dealer Search.

System Development.

Design of Developing System on New Products: from Ideas to Marketing.

Consultation.

Policy Making, Management Improvement, New Development of Organizations, Motivation.

Seminars & Meeting.

New Project & Up-to-date Subjects.

Publication Activities.

Basic, Production and Sales Statistics for Agricultural Machinery, etc.

FARM MACHINERY INDUSTRIAL RESEARCH CORP.

7-2 Kanda Nishikicho, Chiyoda-ku, Tokyo, Japan (Tel. 03/291-5717~8, 3671~4)

Evaluation of IRRI-Pantnagar Bullock-Drawn, Six-Row Paddy Seeder

by
R.D. Singh
Assistant Professor
Department of Agricultural Engineering

Bhagwan Singh
Associate Professor
Dept. of Agric. Engg.

K.N. Singh
General Manager
University Farm

College of Technology, G.B. Pant University of Agriculture and Technology, Pantnagar 263145, India

Abstract

A bullock-drawn paddy seeder based on the manually-operated seeder of IRRI design was modified at the Department of Agricultural Engineering, Pantnagar University to suit Indian conditons. The seeder was evaluated for its performance in the laboratory as well as in the field. In order to adopt this seeder for paddy sowing, tests were conducted to determine per hectare requirement of man-hours and cost of cultivation. Comparative studies were conducted to evaluate the performance of the manually operated four-row seeder, manual transplanting, mechanical broadcasting, manual broadcasting and line sowing by hand for pre-germinated paddy seeds in similar conditions. The observations on man-hour required per hectare, total power required for one hectare cultivation, plant population per square meter, grain and straw yields, total output and input costs indicated that the six-row bullock drawn seeder gave the best results. After the two years' test data, it was found that the total man-hours per hectare requirement was minimum (1443) in the case of bullock drawn paddy seeder and in the case of manual transplanting method, it was 1682. It was also found that there was no significant difference in the grain and straw yield for bullock drawn seeder and transplanted paddy. The cost of cultivation was minimum in the case of the seeder.

Acknowledgements: The authors wish to acknowledge the financial assistance and technical assistance provided by the Indian Council of Agricultural Research, India and International Rice Research Institute Manila, Philippines for this study.

Introduction

With the cropping pattern undergoing rapid changes in modern agriculture, the pressure on agricultural labour has gone up even in developing countries. On a multiple cropping farm, the time available for harvesting of a crop and planting the next crops is so short that it becomes sometimes impossible to manage with the available manpower. Some studies conducted on mechanization suggest that the latter can even increase the employment potential in certain categories[1]. Rice crop is either transplanted or sown direct. The transplanting method is more popular and widely adopted. In India, transplanting is done purely by manual labour and, therefore, farmers generally face the problem of labour shortage in the peak season. This causes delay in transplanting beyond the optimum season as a result of which the yield of the crop is affected considerably. It has been found from some studies that the transplanted paddy takes more time for maturity than direct sowing methods resulting into less time available for land preparation and sowing of the next crop[2]. Mechanical transplanters have been developed in different counries to take care of the labour problem but till now results are not very successful in majority of the developing countries[3]. Keeping in view the above facts, it was necessary to work out some substitute for transplanting. The International Rice Research Institute in the Philippines developed and tested manually operated paddy seeder for sowing pre-germinated paddy seeds[4]. Tests were also conducted on the manually-operated paddy seeder in India[5]. From these tests it was observed that the operation of a 4-row manual seeder in puddled soil is quite tiring and the operator has to take frequent rest during the operation.

Considering the above facts the present study was undertaken to fabricate a bullock-drawn paddy seeder to suit Indian conditions and evaluate its performance in field conditions.

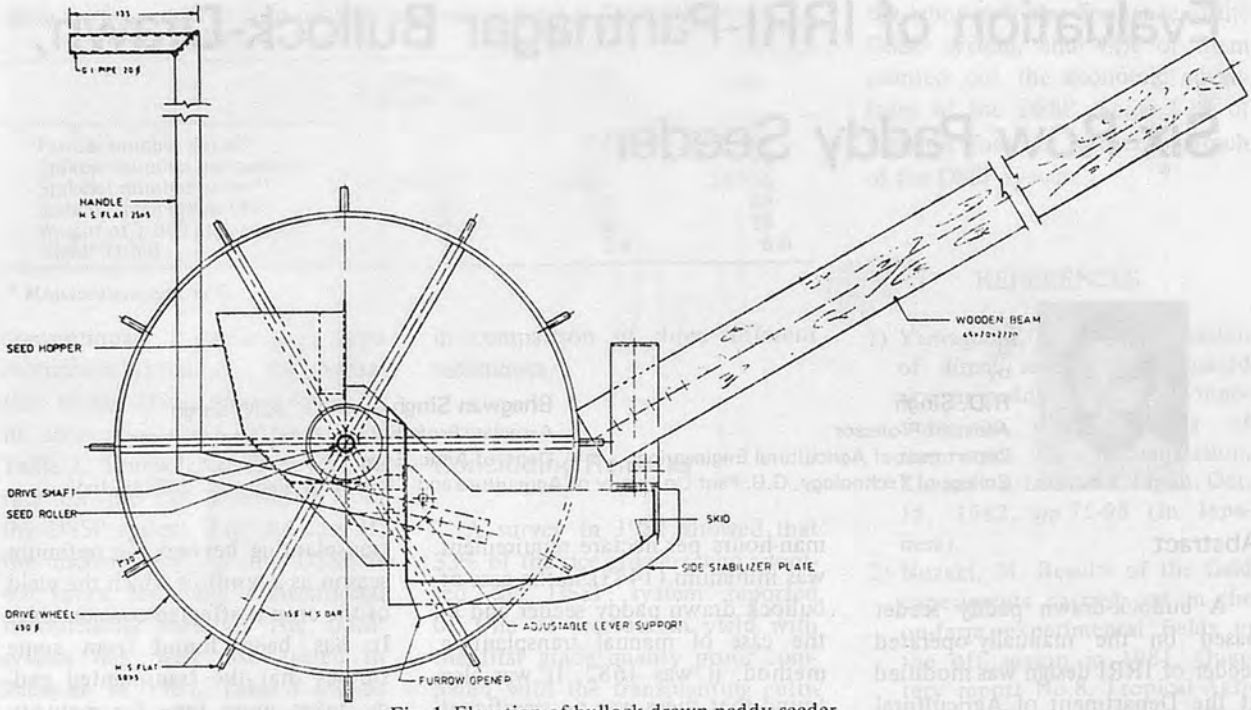

Fig. 1 Elevation of bullock-drawn paddy seeder.

Materials and Methods

Modifications in the IRRI Design

The following modifications were made in the IRRI four-row manually-operated seeder.

(i) The size of the seeder was changed to six-row keeping row-to-row distance the same.

(ii) The single wheel was replaced by two wheels for easy balancing and better working. Both the wheels act as traction wheels and driving unit for the metering rollers.

(iii) The metering rollers were made of aluminum to reduce gross weight of the machine and the manufacturing cost.

(iv) The seed metering assembly was modified to give variable seed rate and free flow of germinated and moist seeds without bridging. The change was made in the

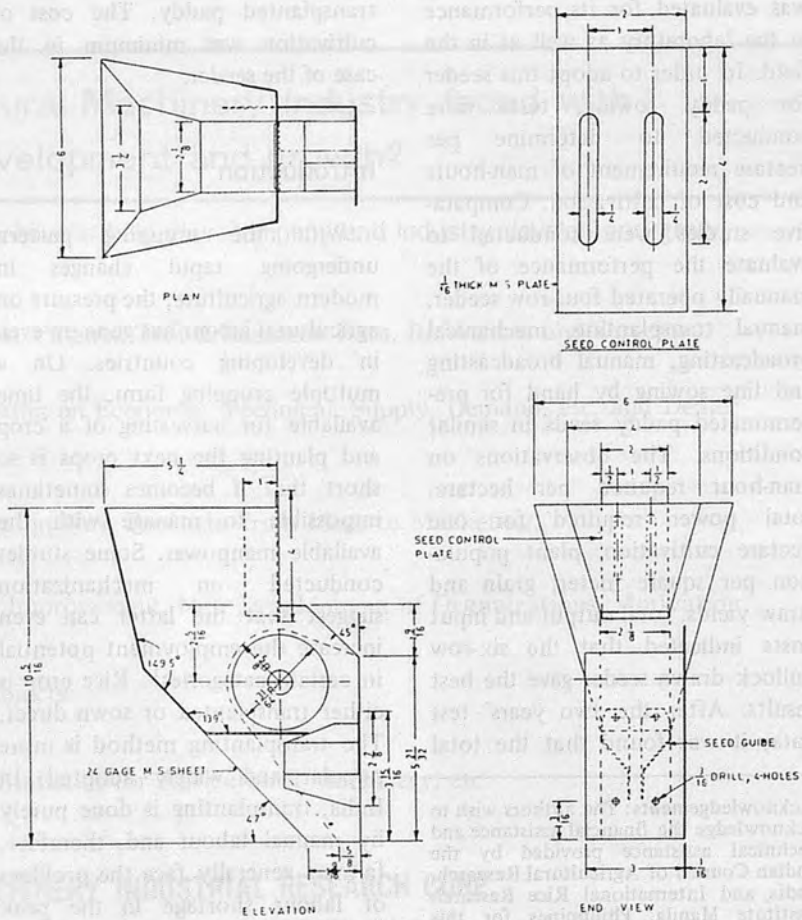

Fig. 2 Modified seed hopper.

hopper by providing adjustable plate to change clearance between rollers and plate to control the seed rate.

(v) In the front of the seeder a wooden beam was fixed to the skid by nuts and bolts for hitching a pair of bullocks to pull the seeder.

(vi) At the rear of the seeder a handle has been provided for balancing and supporting the seeder by hand. It also helps to exert some pressure on the seeder as and when required.

Description of the Machine

The implement consists of six seed boxes, six rollers with grooves fixed on the axle, two ground wheels, wooden beam, handle and a float. The rollers are fixed on the axle directly. When the implement is pulled forward, the rollers meter the seeds and deliver them into the furrows made by the furrow openers under float.

The diameter, length and number of grooves of the roller are 7.5 cm, 7.0 cm and 8 in number, respectively. The overall length, height, width and weight of the seeder are 73 cm, 100 cm, 150 cm and 48 kg., respectively. Figs. 1 and 2 show the details of the six-row seeder.

Laboratory Test

The laboratory tests were conducted to measure the flow and seed rate of the sprouted seeds. The seeder was calibrated for 70-80 kg of seed per hectare for the Jaya variety of paddy. The tests were conducted to note the damage of the plumules and radicles of the germinated paddy seeds at 24, 36 and 48 hours of incubation after 24 hours of soaking in water. Although there was no mechanical damage to the germinated seeds at this seed rate, it was noticed that the bridging of the seeds takes place in the seed box for sprouted seeds of 48-hour incubation. However, for 24-36 hours of sprouting, the flow rate was quite free and could be adjusted for different seed rates. Before taking the seeder for field test it was properly calibrated in the laboratory.

Field Testing of the Seeder

The field tests were conducted at the Experiment Station of the University. Plots of 8 x 5 m^2 size were selected. Six treatments taken were bullock-operated seeder, manually-operated seeder, manual broadcasting, mechanical broadcasting, Line sowing by hand and manual transplanting were taken for each treatment. Random block design was followed for these experiments. Harrowing, levelling, bund construction and puddling operations were done with the help of 25 hp tractor. The observations were taken for total man-hour per hectare for different operations, i.e., field preparation, sowing, bird watching, irrigation, spraying, harvesting and threshing. The Jaya variety of paddy was selected for the experiment.

The field preparation for all the treatments was done at one time before seeding. As the transplanting was done after 20 days of nursery growth, the puddling was done again which resulted in some extra labour requirement. After puddling, the water was drained. The bullock-drawn seeder required two men: one for operation and the other for seed filling in the boxes after some interval. The seeder was operated at 2.0 km/h speed covering 1.50 m width in each pass. Figs. 3 – 6 shows the operation of the bullock-drawn and manually-operated seeder in field and the view of 30 days crops. Before field preparation the soil was tested for its nutrients. Zinc defficiency was

Fig. 3 Bullock-drawn 6-row paddy seeder.

Fig. 4 Crop after 30 days sown by bullock-drawn seeder.

Fig. 5 Manually-operated 4-row seeder.

Fig. 6 Crop after 30 days sown by manually-operated seeder.

Table 1 Energy Requirement for Different Treatments

Treatments	Seeding/ transplanting (man-h/ha)	Weeding (man-h/ha)	Irrigation (man-h/ha)	Harvesting & threshing (man-h/ha)	Threshing (tractor-h/ha)	Total (man-h/ha)	Total (tractor-h/ha)
Bullock drawn paddy seeder	8	750	60	165	7.8	1 443	32.8
Manually operated paddy seeder	32	750	60	160	7.5	1 462	32.5
Mechanical broadcaster	8	1 125	60	155	7.15	1 806	32.15
Manual broadcasting	10	1 250	60	150	6.94	1 930	31.94
Line sowing by hand	125	750	60	162	7.4	1 557	32.4
Transplanting manually	550	450	64	158	7.5	1 682	32.5

Bird watching, Man-hours/ha = 120
Spraying, m-hours/ha = 40

Field preparation, man-hours/ha = 300
Field preparation, tractor-hours/ha = 25

Table 2 Plant Growth at Different Stages

Treatments	Plant Height (cm) after Seeding Date						
	15 days	30 days	45 days	60 days	75 days	90 days	105 & 120 days
Bullock drawn paddy seeder	28.1	56.0	79.3	81.8	105.2	109.8	110.8
Manually operated paddy seeder	27.5	50.1	71.5	76.9	102.0	105.5	105.9
Mechanical Broadcasting	27.2	47.7	65.3	74.4	100.2	103.2	104.0
Manual Broadcasting	25.6	47.2	69.0	72.1	98.1	99.9	100.2
Line sowing by hand	30.1	58.5	82.4	86.3	108.2	114.3	116.1
Transplanting manually	25.6	43.2	62.5	75.8	100.3	104.1	105.2

observed which was made up by applying 25kg of zinc per hectare in the soil. Three irrigations were given for each plot. One additional irrigation was applied in the nursery plot. In transplanted paddy plots two weedings were done whereas in other treatments three weedings were needed. In the standing crop a small dose of zinc and lime was sprayed with a manually-operated sprayer. The harvesting of the crop was done manually and threshing was done by a multicrop axial flow thresher.

Results and Discussion

The bulllock-operated seeder covered 0.24 ha per hour. The summary of the test results regarding energy requirement per ha are shown in **Table I**. From the table it is evident that total man-hours per ha was minimum (1443) in the case of bullock drawn seeder and maximum (1930) in manual broadcasting. The man-hours per ha requirement for bird watching, field preparation, spraying were the same in all the methods. The major difference was observed in seeding and weeding whereas for irrigation and

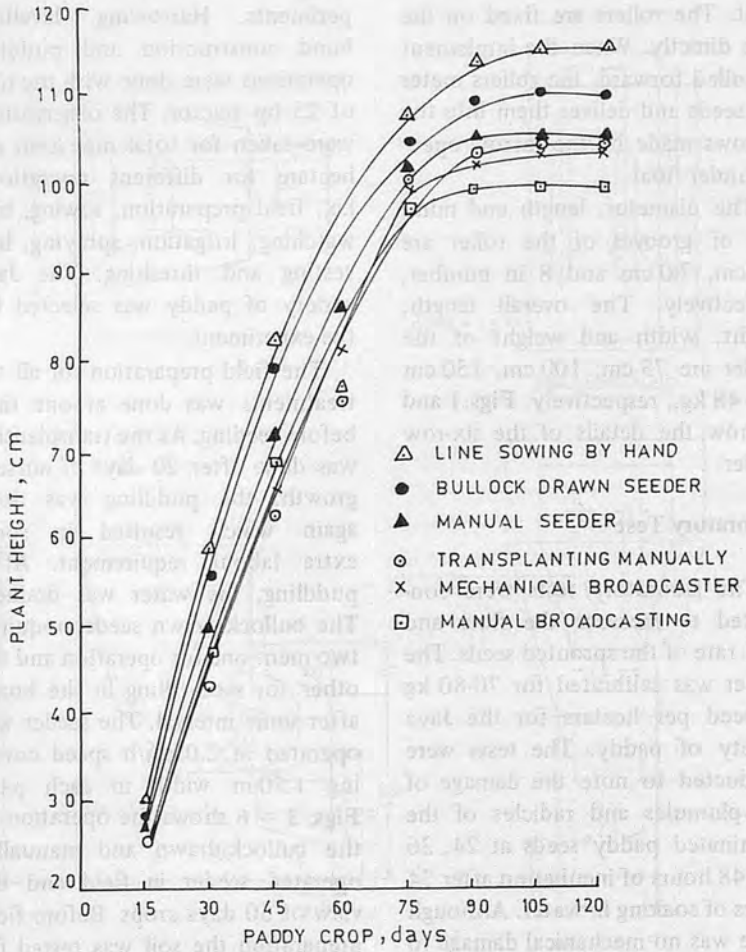

Fig. 7 Plant growth after sowing.

Table 3 Details of Experimental Timings, Seed Rate, Plant Population, Tillers and Harvest Moisture

Treatment	Date of seeding transplanting	Date of harvesting	Seed rate (kg/ha)	Plant population at maturity /m²	Average number of tillers	Grain moisture content at harvesting (%)
Bullock drawn paddy seeder	9.7.80	16.11.80	70.00	692	4.4	18.5
Manually operated paddy seeder	9.7.80	16.11.80	70.00	641	4.2	18.5
Mechanical broadcasting	9.7.80	16.11.80	100.00	623	3.0	18.5
Manual broadcasting	9.7.80	16.11.80	100.00	592	2.5	18.4
Line sowing by hand	9.7.80	16.11.80	80.00	646	3.3	18.5
Transplanting manually	29.7.80	26.11.80	30.00	662	9.2	18.6

Table 4 Economics of Different Treatments

Treatment	Grain yield (qtl/ha)	Straw yield (qtl/ha)	Straw grain ratio	Total output cost (Rs./ha)	Total input cost (Rs./ha)	Net profit (Rs./ha)
Bullock drawn paddy seeder	78.00	69.50	1:1.14	7 228.50	3 219.00	4 009.50
Manually operated paddy seeder	73.00	69.50	1:1.05	6 778.50	3 223.08	3 555.42
Mechanical broadcaster	71.50	69.62	1:1.03	6 643.86	3 613.65	3 030.21
Manual broadcasting	69.40	69.40	1:1.00	6 454.20	3 722.78	2 731.42
Line sowing by hand	74.00	72.06	1:1.05	6 876.18	3 334.63	3 541.55
Transplanting manually	75.00	67.40	1:1.08	6 952.40	3 353.28	3 599.12

harvesting it was almost the same. The minimum labour requirement for weeding was in the transplanting method (450) whereas it was 750 man-h/ha in bullock drawn seeder which is less than the other direct sowing method. In the broadcasting treatments, the man-hours required for weeding were about 58% higher than the line sown treatments. The manual transplanting requires only 60% and 38% of man hours required in weeding for line sown treatments and broadcast treatments. However, transplanting required much higher manual energy compared to other seeding treatments.

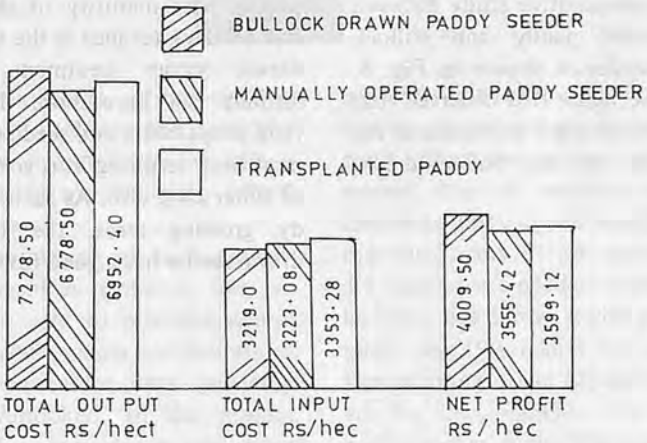

Fig. 8 Comparison of output, input and net profit for bullock-drawn seeder, manually-operated seeder and transplanted paddy.

The plant height after 15 days interval for each method was recorded up to 120 days of growth (Table 2). It can be seen from the table that there was no increase in plant height after 105 days of the crop and also the maximum growth rate was observed in the 1st two fortnights in all treatments. There is no appreciable difference in the plant height in different treatments (Fig. 7). However, the plant height is minimum in the manually-transplanted paddy and maximum in line sowing by hand.

The date of sowing and harvesting, seed rate, plant population per square meter, average number of tillering and average moisture content of grain at harvesting time are shown in Table 3. Results indicate that the bullock-drawn seeder crop matured 10 days earlier than transplanted crop leaving more time for the sowing of next crop. It was also found that plant population was maximum (692) in the bullock-drawn seeder followed by transplanting method (662) and minimum in manual broadcasting (592). Thus plant population of 30 per square meter was greater in bullock-drawn seeder crop than the transplanted crop. The seed rate was greater in the bullock-drawn seeder than in the transplanting method. It was observed that on the average, only 20-25 hills of each 2-3 seedlings were transplanted/m² against the recommended population of 33 hills of 2-3 seedlings/m². The average number of tillering per plant was greater in the transplanted paddy (9.2) than in the drawn seeder (4.4). In the direct sowing methods the tillering rate was between 2.5 to 4.2/plant.

The total grain yield, straw yield straw-grain ratio, output cost, input cost and net profit are shown in Table 4. From the table it can be seen that the highest yield of grain was recorded in the bullock-drawn seeder (78.0 quintals/ha) followed by transplanted crop (75.0 quintals/ha. and minimum in the manual broadcasting case (69.40) quintals/ha). The highest yield was due to greater plant population,

higher grain straw ratio and early maturity of the crop. There was not much difference in grain and straw yields among the treatments. The total output cost was maximum (Rs. 7228.50) in bullock drawn seeder followed by transplanting (Rs. 6952.40) and minimum (Rs. 6545.20)/ha in manual broadcasting. The total input cost was minimum (Rs. 3219.00) in the bullock-drawn seeder and maximum (Rs. 3722.78)/ha in the manual-broadcasting whereas in the transplanting method, it was Rs. 3353.28/ha. The net profit for each method was also calculated and these figures are shown in the Table 4.

The comparative study between transplanted paddy and bullock drawn seeder is shown in Fig. 8. From the figure it is observed that there is a marginal difference of Rs. 410.38/ha in the bullock-drawn seeder.

Conclusions

The bullock-drawn paddy seeder requires 1443 man-h/ha for all the agricultural operations to produce one hectare of paddy crop whereas the transplanting method requires 1682 man-h/ha. The latter covers 0.24 ha area per hour with one pair of bullock and two labourers and needs only 8 man-h/ha for sowing whereas the transplanting method requires 550 man-h/ha. Since labour is scarce during the transplanting season the use of seeder will help in completing the seeding operations within optimum period and it may affect the yield significantly. The maturity of the crop was 10 days advance in the bullock-drawn seeder treatment. Thus, farmers can have more time for field preparation and seeding of the next crop resulting into good yield of other crop also. As such, in paddy growing areas, the bullock-drawn seeder has a good future.

REFERENCES

1. Financial express, New Delhi, 27.2.1977.
2. Annual report of Prototype feasibility Test Scheme Pantnagar (1980). Presented at the 10th annual work shop held at M.P.K.V. Rahuri Maharastra Feb. 15-19, 1981. Page 19-57.
3. C.P. Singh and Nand Kishore 1978-79. A review study on paddy transplanter. The agricultural Engineer, Vol. XXI 16-21.
4. Semi Annual Report of International Rice Research Institute Manila, Philippines, 1979, 7-9.
5. Annual report of IRRI-Pantnagar sub contract Project, G.B. Pant University of Agriculture and Technology, Pantnagar, India, 1978-79. ■■

Development of a Wetland Seeder from Mechanical and Ergonomical Considerations

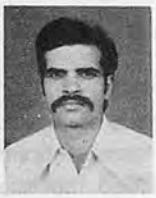

by
V.K. Tewari
Research Scholar
Agricultural Engineering Department
Indian Institute of Technology
Kharagpur 721302, India

R.K. Datta
Professor and Head
Agric. Engg. Dept.
I.I.T.
Kharagpur 721302, India

Abstract

A manually-operated, 4-row sprouted paddy seeder was designed and developed in the Agricultural Engineering Department of I.I.T., Kharagpur. The machine was tested in the field from mechanical as well as ergonomic considerations. At the present level of development it is capable of sowing 6 seeds per hill at a hill to hill spacing of 16.0 cm. The average output of the machine was 43.20 kg/ha for paddy at a field capacity of 0.08 ha/h. The performance of the machine appeared to be satisfactory. However, from ergonomic considerations it appears that one man cannot operate comfortably a four-row seeder. A two-row one appears to be the answer.

Introduction

Recent studies indicate that planting of pre-germinated paddy seeds gives a comparable yield to that of transplanted paddy. However, the success of the system will largely depend upon the availability of a suitable planting machine. In the absence of any commercially available machine, an attempt has been made to design and develop a manually operated planter with a provision to use this with animal power, too.

In the design of such agricultural machines emphasis has, so far, been paid to mechanical perfection while ranges and limitations of the operators have generally been overlooked. In the present study due importance was given to some of the human factors involved in the man-machine system. Attempts have also been made to scale the workload with the manually-operated unit and evaluate a more comfortable posture to operate the machine.

Review of Literature

General

Pradhan (4) reported the development of a two-row manually-operated seed drill for direct seeding of sprouted paddy seeds using cup-feed type metering mechanism. Navasero (3) designed and tested a paddy seeder at the IRRI in the Philippines. The experimental seeder was provided with a two-step metering mechanism. The first step was to meter a large quantity of seeds from the hopper and the second step of metering was to distribute the metered seeds to the individual rows. It was stated that 4.9 man-h were needed to seed one ha with this 8-row seeder as compared to 199 man-h for manual transplanting. Khan (2) also reported the development of a 6-row paddy seeder at the IRRI for seeding pregerminated paddy seeds on puddled soil. The results indicate that planting by this seeder was 20 times faster than that of manual transplanting.

However, all these machines are yet to be available commercially. May be these are still in the process of further mechanical perfection. Further, in all these machines there is nothing to suggest that any investigation relating to ergonomics has been carried out.

Scaling of Work Load

In general, there are two ways of scaling the work load, viz. direct calorimetry and indirect calorimetry. Indirect calorimetry has been tried for scaling of workload for different farm operations. Some

empirical relationships have also been suggested for different exercises. Saha *et al* (5) developed the following relationship between Energy Expenditure Rate (EER) and Heart Rate (H.R.).

$$EER = \frac{H.R. - 66.0}{2.4}$$

Christenson (1) proposed the scaling of physical work as indicated below:

Work Classification	H.R. beats/min	Energy Consumption k Cal/min
Very light	–	2.5
Light	75	2.5
Moderately heavy	100	5.0
Heavy	125	7.5
Very heavy	150	10.0
Unduly heavy	175	12.5

Zander (6) also classified the grade of work in terms of energy expenditure rate and heart rate. This is illustrated below:

Grade of work	EER Kj/min	HR beats/min
Very light	Less than 10.0	Less than 75
Light	10–12	75–100
Moderately heavy	20–30	100–125
Heavy	30–40	125–150
Very heavy	40–50	150–175
Unduly heavy	More than 50	More than 175

Nag *et al* (7) categorised the occupational workload for Indian agricultural workers. According to them the work intensity of the present operations are classified in terms of light, moderate, heavy, and extremely heavy which correspond to 25, 25 to 50, 50 to 75 and beyond 75 of the maximal oxygen uptake, respectively, obtained from rhythmic bicycle ergometry. The operations and the corresponding category of loads are shown below in the **Table 1**.

Table 1 Categorisation of Agricultural Work

Variables	Light	Moderate	Heavy	Extremely Heavy
V 0_2 max	Below 25	Up to 50	Up to 75	Above 75
0_2 consumption (l/min)	0.435	0.436 – 0.870	0.871 – 1.305	1.306
Energy Cost (KJ/min)	9.10	9.11 – 18.15	18.16 – 27.22	27.23
Man-hours involved in each category	29.0	64.0	6.0	1.0
Operations in each category	Sitting work and rest during field activities, watch keeping to scare-birds, counting grains, shelving and labelling, etc. fertilising laddering by two men	Laddering (single) walking with tools etc. vegetables water supply uprooting (Sitting) and bending, cutting crops.	Ploughing water lighting digging soil, bund trimming manual harvests and threshing.	Pedal threshing and bund trimming (deylad)

Design Criteria

The various functional and design requirements of the machine are as follows:

1. The seed hopper should be so designed that the seeds flow smoothly towards the metering unit without causing bridging, interlocking and entanglement of embryos.
2. The metering mechanism should pick up 3-5 seeds at a time in the cup from the seed mass.
3. The seeds should be conveyed to the furrow opener without damage and with least dispersion.
4. The draft requirement should be within the reach of the muscle power of one man/two men.
5. The unit should be simple, cheap and should make use of locally available materials of construction.
6. The unit should have replaceable parts and should need less repair and maintenance charges.

Design of Delivery Funnel

Theoretical background – Seeds ejected out of the spoons have three relative motions with respect to the ground. These are:

a) Motion along the X-plane which is caused by the peripheral speed of the spoons.
b) Motion along the Y-plane which is caused by the force of gravity.
c) Motion along the Z-plane which is due to the ground speed of the seeder.

With respect to the delivery funnel, the motion of the seed is only in the X and Y planes because the delivery funnel also moves in the Z-plane along with the seeder. The path described by the seed with respect to the funnel in a free fall may be developed as follows:

Let U_i represent the initial vertical velocity of the seed at the time of ejection from the spoon.

Let U_p represent the peripheral speed of the spoon and U_t be the velocity of the falling seed after a time t, elapsed after ejection from the spoon. Using equations of motion under gravity, we have

$$X = U_p \times t \quad (1)$$

and

$$Y = U_i \times t + \frac{1}{2} g t^2 \quad (2)$$

Since the initial velocity of the falling seed after ejection is zero, we have, $u_t = 0$ and hence eqn. (2) becomes

$$Y = \frac{1}{2} g t^2 \quad (3)$$

Substituting the value of t from equation (1) into equation (3), we have

$$Y = \frac{1}{2} g \left(\frac{X}{U_p}\right)^2$$

or

$$X^2 = \left(\frac{2U_p^2}{g}\right) Y$$

or

$$X^2 = 4aY \quad \text{where } a = \frac{U_p^2}{2g}.$$

The last equation represents the

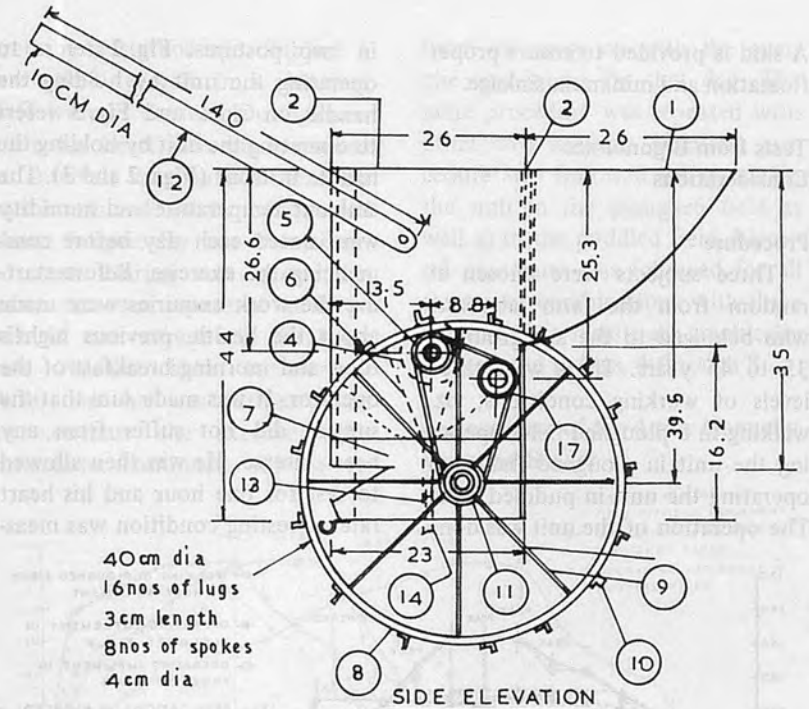

SIDE ELEVATION

name of parts	material
17. Idler	wood
16. Spoon	m.s 16 mm thick
15. Spoon links	m.s.
14. Furrow opener	3.4mm thick
13. Seed delivery tube	polythene tube
12. Handle	conduit pipe
11. Drive sprocket	m.s. 18 teeth
10. Lugs	angle iron
9. Spokes	m.s.
8. Ground wheel	plate iron
7. Float	tin 2.4mm thick
6. Seed delivery funnel	al 0.8 mm thick
5. Driven sprocket	m.s. 22 teeth
4. Spoon metering disc	wood 4 mm thick
3. Shutter door	wood
2. Secondary hopper	wood
1. Primary hopper	wood

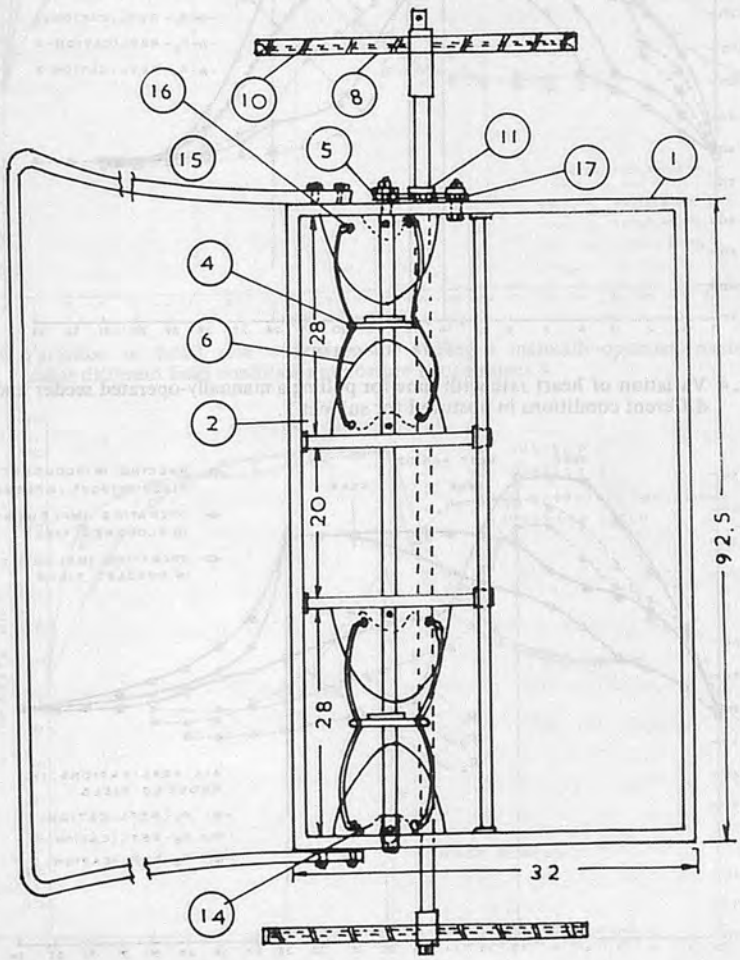

PLAN

in cm

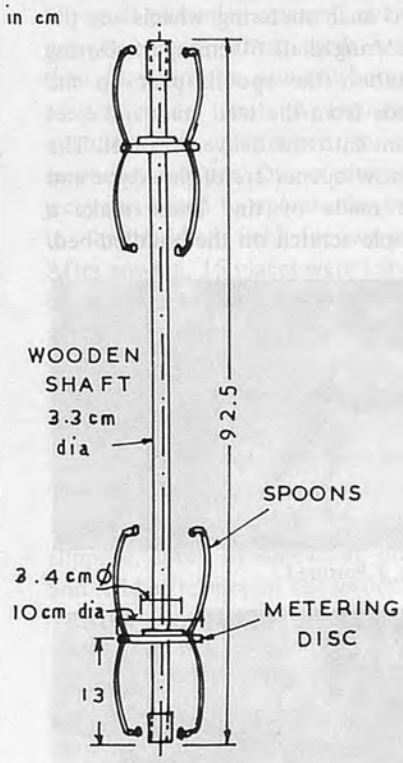

Metering shaft arrangement

Fig. 1 Wetland 4-row paddy seeder.

equation of a parabola, with '4a' as *latus reetum*. It appears, therefore, that the seed funnel must be designed to convey the seeds along a path which is approximately a parabola.

Materials and Methods

Fig. 1 shows a manually-drawn, 4-row pre-germinated paddy seeder for sprouted paddy seeds. It was designed and fabricated at the Agricultural Engineering Department, I.I.T., Kharagpur. A spoon-feed type metering mechanism was employed. This mechanism has the advantages of conveying the seeds to the furrow openers without any damage. Spoons which can carry 3-5 seeds at one time were fitted on a metering disc, which in turn is supported on a mild steel shaft. The metering wheel is situated in the secondary hopper. There are two such metering wheels on the metering shaft 60 cm apart. During rotation the spoons pick up the seeds from the seed mass and eject them into the delivery funnel. The furrow opener are of shoe-type and are made of tin. These make a simple scratch on the puddled-bed.

Fig. 2 Posture I.

Fig. 3 Posture II.

A skid is provided to ensure proper floatation and minimum sinkage.

Tests from Ergonomics Considerations

Procedure

Three subjects were chosen at random from the farm labourers who belonged to the age group of 35 to 45 years. There were three levels of working conditions, viz. walking in a ploughed field, operating the unit in ploughed field and operating the unit in puddled field. The operation of the unit was done in two postures. **Fig. 2** refers to operating the unit by holding the handle on sides and **Fig. 3** refers to operating the unit by holding the handle in front (**Figs. 2** and **3**). The ambient temperature and humidity were noted each day before commencing the exercise. Before starting the work enquiries were made about the health, previous night's food and morning breakfast of the operator. It was made sure that the subject did not suffer from any heart disease. He was then allowed to rest for one hour and his heart rate at resting condition was meas-

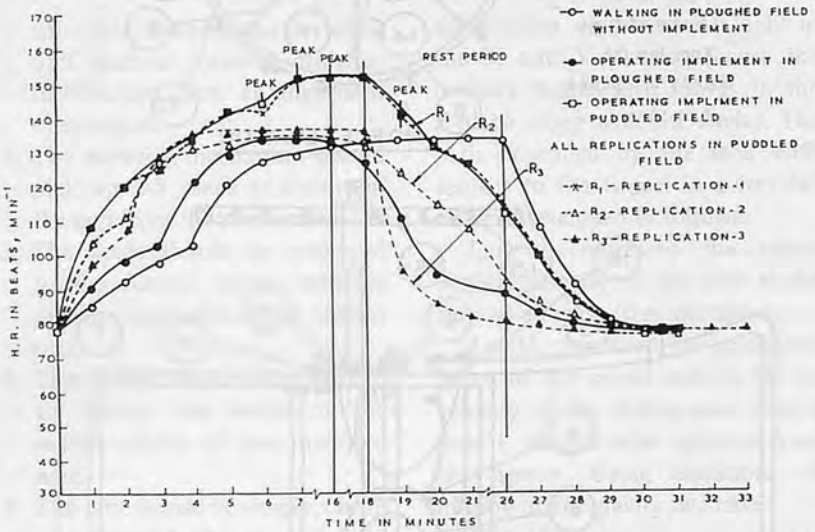

Fig. 4 Variation of heart rate with time for pulling a manually-operated seeder under different conditions in posture I for subject 1.

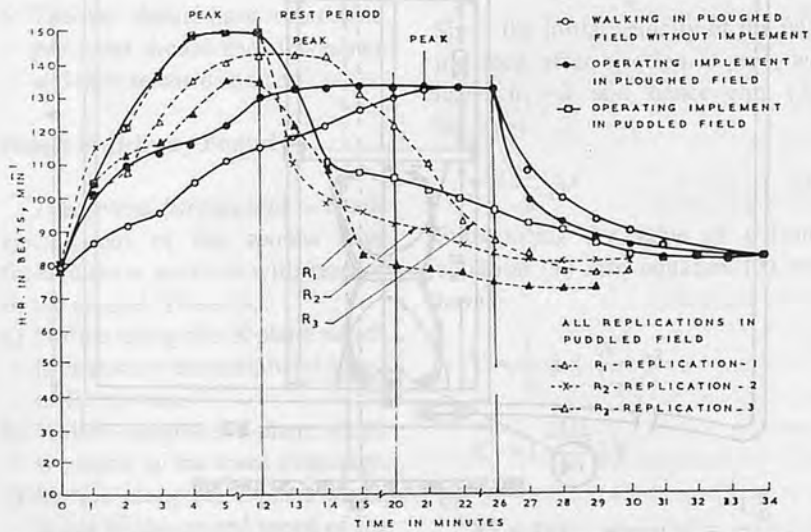

Fig. 5 Variation of heart rate with time for pulling a manually-operated seeder under different conditions in posture I for subject 2.

ured by a stethoscope. Subject 1 was asked to walk in a ploughed field without the unit. During operation his heart rate was measured at intervals of one minute. This was continued till he complained about fatigue. He was then allowed rest. During rest period his heart rate was measured at intervals of one minute till the heart rate reached back to normal. After rest he was further asked to continue the exercise. This procedure continued till he refused to carry on with the exercise any longer on that day. The same procedure was repeated with other two subjects. Identical procedure was followed for operating the unit in the ploughed field as well as in the puddled field. Identical procedure was followed for all treatment combinations with three subjects. The results are graphically represented in **Figs. 4** through **8**.

Performance of the 4-row Manually Operated Seeder

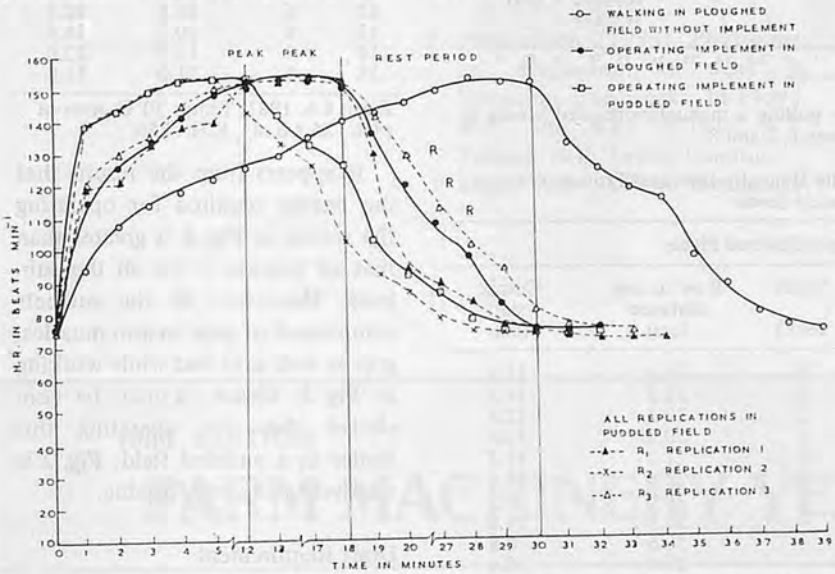

Fig. 6 Variation of heart rate with time for pulling a manually-operated seeder under different field conditions in posture I for subject 3.

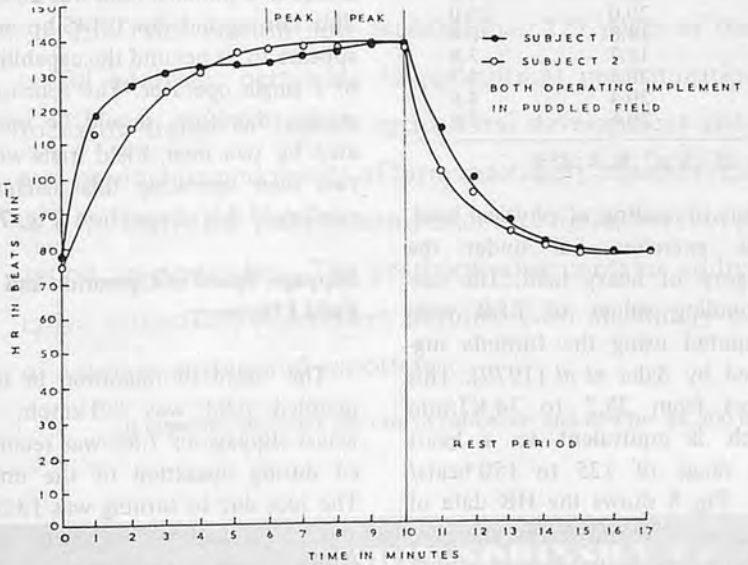

Fig. 7 Variation of heart rate with time for pulling a manually-operated seeder in puddled field in posture I for subjects 1 and 2.

Tests were carried out in the field for

1. Determining the number of seeds ejected per hill during operation.
2. Determining the number of seedlings emerged per hill.
3. Finding out the hill to hill spacing of seedlings emerged.
4. Evaluating the dispersion of seeds within a hill.
5. Evaluating the row-to-row spacing.
6. Evaluating the wheel slippage.
7. Finding out the field efficiency.

Procedure

A field of 25 m x 6 m was puddled and made ready for sowing of sprouted paddy seeds. Paddy seeds of the Jaya variety were soaked in fresh water and then washed with fresh water. It was then kept in a gunny bag and wrapped into layers. Occasionally fresh water was sprinkled on it. This was kept for 48 h till small plumules emerged out of the seed coat. These seeds were then filled in the primary hopper of the seeder unit. A regulated quantity was maintained in the secondary hopper. One of the subjects was asked to operate the unit in the puddled field for sowing. After sowing, 15 places were selected at random from the whole experimental plot. From each place, two observations relating to number of seeds dropped, hill to hill spacing, dispersion of seeds, and row to row spacing were recorded. The data were also taken to determine the parameters like wheel slippage, speed of operation, draft and field efficiency of the seeder.

After emergence observations were again taken for number of seedlings per hill, hill to hill spacing and row to row spacing from the same random places.

The data for all these observations are presented in **Tables 2** and **3**.

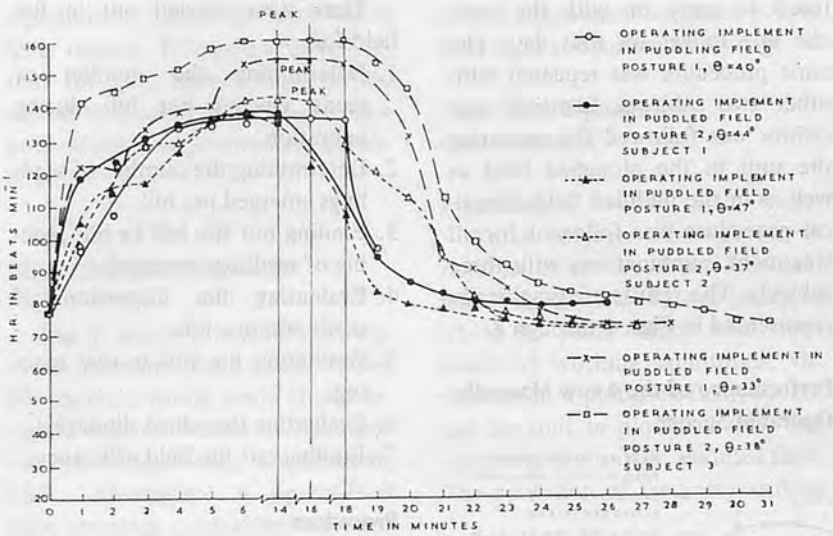

Fig. 8 Variation of heart rate with time for pulling a manually-operated seeder in puddled field in two postures for subjects 1, 2 and 3.

Table 3 Results of Field Performance of the Manually-Operated Prototype 4-row Seeder for Sowing of Sprouted Paddy Seeds

Sl. No.	At Ramdomly Selected Places				
	No. of seeds per hill	Hill to hill spacing (cm)	Voids (No.)	Row to row distance (cm)	Dispersion (cm)
1	6	17	1	24.6	11.5
2	5	15	1	22.5	16.5
3	5	29	2	20.1	12.8
4	7	23.4	1	20.0	13.5
5	7	28.1	1	21.2	17.2
6	7	24.0	–	21.4	18.6
7	8	15.0	–	20.0	8.5
8	7	18.4	–	20.0	14.0
9	9	15.0	–	20.5	6.8
10	10	16.2	–	20.4	10.4
11	7	16.5	–	20.8	12.0
12	9	15.2	–	20.9	11.0
13	7	19.1	–	18.5	12.0
14	7	19.2	–	18.4	4.0
15	7	20.0	–	20.0	10.0
16	6	17.6	–	19.8	10.4
17	4	17.5	–	19.7	7.8
18	6	15.0	–	20.1	4.7
19	5	15.3	–	20.4	4.6
20	7	18.1	–	20.6	5.6

Date: 01.06.1981, Temp: 31°C, Area of the plot: 25 x 6 m², R. R: 85%

Results and Discussions

Scaling of work load

Figs. 4 through 7 indicate the performance of the three subjects under the specified three different field conditions. It may be seen that in all these cases the peak H.R. for the three subjects ranges between 135 to 150 beats/min. According to Zander's (1973) classification of scaling of physical load, these exercises fall under the category of heavy load. The corresponding values of EER were computed using the formula suggested by Saha *et al* (1979). This ranges from 28.5 to 34 KJ/min which is equivalent to a heart rate range of 125 to 150 beats/min. Fig. 8 shows the HR data of subjects 1, 2 and 3 for exercises of operating the implement in puddled field in two different Figs. 2 and 3.

Table 2 Results of Emergence of Seedlings, Hill to Hill Spacing and Row to Row Spacing

Sl. No.	At Randomly Selected Places		
	No. of plants /hills	Hill to hill distance (cm)	Row to row distance (cm)
1	6	28.5	22.0
2	5	22.8	22.8
3	7	16.0	20.4
4	4	19.5	21.8
5	4	19.0	20.5
6	7	19.5	22.0
7	4	18.8	21.6
8	6	19.5	20.0
9	6	17.9	21.0
10	3	20.6	19.8
11	2	16.5	20.5
12	6	17.5	22.5
13	6	20.5	18.9
14	3	16.0	22.0
15	5	21.0	21.5

Date: 8.6. 1981, Temp: 30°C, Area of plot: 25 x 6 m², R.H.: 75%

It appears from the results that the energy required for operating the seeder in Fig. 3 is greater than that of posture 1 for all the subjects. Moreover, all the subjects complained of pain in arm muscles, grip as well as in feet while working in Fig. 3. Hence, it may be concluded that for operating this seeder in a puddled field, Fig. 2 is relatively more comfortable.

Draft Requirement

The average draft for pulling the seeder in a puddled field was 20 kg. This corresponds to 0.145 hp and appears to be beyond the capability of a single operator. The four-row seeder, therefore, should be operated by two men. Field trials with two men operating this machine confirmed this observation (Fig. 7).

Slippage, Speed of Operation and Field Efficiency

The speed of operation in the puddled field was 2.0 kmph. A wheel slippage of 7.8% was recorded during operation of the unit. The loss due to turning was 13.3% and the calculated value of the field efficiency was 52.50%.

Field Performance

It is evident from the results that the average number of seeds dropped per hill was 6 which is slightly higher than the recommended 3-5 seeds per hill. The average hill-to-hill spacing was observed to be 16.0 cm. This is in close agreement with the designed value of 15.0 cm. The average row-to-row spacing was 19.85 cm. This is almost equal to the recommended value of 20.0 cm.

Conclusions

1. From the mechanical point of view the performance of the machine appears to be satisfactory for sowing of sprouted paddy seeds.
2. From ergonomical considerations it appears that one man can pull a two-row seeder comfortably in Fig. 2.

REFERENCES

1. Christenson (1953), Physiological evaluation of work in Nykroppe iron works. In Floyd. W.F. and WEL FORD, A.T. Fatigue, H.K. Lewis, London.
2. Khan, A.U. (1975). Mechanization technology for tropical agriculture, Agric. Machinery. Asia. 4(1): 30-35.
3. Navasero, C. (1969). Row seeder for low laud Rice soil. Saturday Seminar, Agril. Engg. Dept. I.R. R.I. Philippines.
4. Pradthan, S.N. and Roy, A.K. (1973). Two-row fertilizer seed-drill – an improvement. Indian Farming.
5. Saha, P.N. *et al* (1979). An acceptable work load for Indian workers. Ergonomics, 22(9): 1059-1071.
6. Zander, J. (1975). Principles of ergonomics Agric. Univ. Wageningen, the Netherlands.
7. Nag, P.K. *et al* (1980). Occupation work load of Indian agricultural Workers. Ergonomics, 1980 vol. 23 (2): 91-102. ■■

1983 EDITION

FARM MACHINERY YEARBOOK

The 1983 edition now available has 227 pages of the latest comments, statistics and useful addresses pertaining to agricultural mechanization in Japan. The commentaries focus on trends in Japan's agricultural development and agricultural machinery industry and production and results of farm machinery research efforts.

The statistical information pertains to agriculture, in general, and agricultural mechanization, in particular. The yearbook also contains addresses and references of administrative authorities, experiment stations, farm machinery manufacturers and foreign address of use to importers and exporters.

It measures 18.0 cm x 26.5 cm in hard cover and sells for ¥9,300 (sea mail) and ¥11,000 (air mail).

SHIN-NORINSHA Co., Ltd.

7, 2-chome, Kanda Nishikicho, Chiyodaku, Tokyo 101 Japan

A Progressive Approach to Minimum Tillage

by
G. S. Sheikh, Khalid Pervez, J.K. Sial, Muhammad Afzal
Faculty of Agricultural Engineering and Technology, University of Agriculture, Faisalabad, Pakistan

Abdul Ghafoor Ansari
Directorate of Agric. Engg.
Government of the Punjab
Faisalabad, Pakistan

Muhammad Yasin
Directorate of Agric. Engg.
Government of the Punjab
Faisalabad, Pakistan

Minimum Tillage to Conserve Soil Structure

Tillage operations are generally performed to break up and pulverize the soil, and to allow the free movement of air and water in order to promote plant growth. Excessive pulverization by means of heavy equipment is, however, detrimental to soil structure. Further, such an equipment may produce soil compaction that could greatly upset the balance between the air, solid and water components of soil. The compaction may increase the soil strength so that root growth could be impeded. Further, compacting operations are needed to gain good contact between the seed and soil during planting. In this case, the increase in strength may be detrimental, while the added contact is desirable. The amount of manipulation of soil or the extent to which tillage should be conducted for the purpose of effective plant growth is a subject requiring immediate attention.

Minimum Tillage to Economize Fuel Energy

Tillage requires the maximum energy amongst all agricultural operations. Consequently, it is the most expensive operation in agriculture. At present, about 80,000 tractors are used in Pakistan. With an annual use of tractor for 300-400 hours in tillage and assuming an hourly consumption of a gallon of diesel oil (Rs. 12/gal), the total cost of fuel consumed annually on tillage in the country is estimated at 400 million rupees. In this age of energy crisis, therefore, utmost care must be exercised in selecting and using the tillage implements with a view to minimizing foreign exchange spent on fuel.

Conventional Tillage Practice

Conventionally, Pakistan farmers use a single tillage implement. This is a narrow tine cultivator for all types of tillage operations. The construction of the implement is such that it skips untilled soil between the tools and thus necessitates a greater number of plowings for achieving a suitable seed-bed. This results in increased expenditure on fuel, in addition to producing unnecessary soil compaction at a certain soil depth which impedes root development.

Objectives

In view of the heavy expenditure incurred on fuel in tillage and the hampering effects of excessive tillage on soil structure, minimum tillage has become imperative in this age. In order to accept the benefits of the minimum tillage concept, the following studies were conducted in progression:

a. To study the effects of primary and secondary tillage operations on soil characteristics, yield of crops and economic returns.
b. To study the effects on soil and crop by reducing the number of secondary tillage operations after primary tillage.

c. To study the effects of combined primary and secondary tillage operations.
d. To study the above effects of secondary tillage only by deleting primary tillage operations.
e. To study the above effects by deleting primary tillage operations and reducing the number of secondary tillage operations.
f. To suggest viable tillage implements or equipment from the stand-point of minimum energy input with an acceptable output in terms of seed-bed preparation, crop production and economic returns.

Project

In order to achieve the above objectives, a project was developed which was financed by Pakistan Science Foundation. Some of the expenses for the experiments were, however, met from the budget of the University of Agriculture, and Directorate of Agricultural Engineering, Faisalabad, Pakistan. The project continued for a period of four years. The results of the different phases of investigations were published during different years in the Journal of Agricultural Mechanization in Asia, Japan and in the proceedings of the annual Conventions of Pakistan Society of Agricultural Engineers. A complete final report on the project investigations have been submitted to the Pakistan Science Foundation. In this paper, salient features of the final results of investigations are presented.

The tillage experiments for wheat and maize were conducted on the following types of soil: sandy loam, loam, and silty clay loam.

The following types of tractor drawn implements were used: mouldboard plow, disk plow, subsoiler, narrow tine cultivator, sweep cultivator, disk harrow, and rotary cultivator.

A bullock-drawn Munnah plow was also used in some of the experiments.

Parameters Studied

The effects of tillage operations were studied in terms of the following dependent variables or parameters relating to soil, crop and machine:

1) Soil density and moisture
2) Penetration resistance of soil
3) Shear strength of soil
4) Force exerted by seedlings during emergence
5) Emergence and yield
6) Cost of tillage operations
7) Cost of crop production
8) Economic returns

Procedure

Tillage operations with different implements were conducted on the farms of the University of Agriculture, and Directorate of Agricultural Engineering, Faisalabad, Pakistan. After seed-bed preparation, soil parameters, like density, moisture, penetration resistance, and shear strength were measured with suitable instruments. After measuring the above parameters, seeding was done with a tractor drawn calibrated grain drill. Emergence force was calculated and yields were finally recorded after harvesting. Economic parameters like cost of tillage operation, cost of crop production and returns from each tillage operation or treatment were estimated.

Results

The results of the tillage investigations follow:

Effects with Primary and Secondary Tillage

Immediately after harvest of the previous crop, the experimental plots were prepared with primary operations and were then left as such in order to allow the microbiological and aeration processes to occur. Secondary operations were, later on, performed at the time of seed-bed preparation. The primary and secondary tillage operations, thus, used on different plots of sandy loam soil, were as follows:

Treatment	Primary Operation	Scondary Operation
A	Disk plow, Narrow-tine cultivator	N.T. cultivator (twice)
B	Disk plow, Sweep cutivator	Sweep cultivator (twice)
C	N.T. cultivator (4 times)	N.T. cultivator (twice)
D	Disk harrow (twice)	Disk harrow (twice)
E	Rotary cultivator (twice)	Rotary cultivator (twice)

It may be noted that in the primary operations, the mouldboard plow was not used, since the soil was sandy loam and where the use of disk plow has been considered appropriate.

The following results were obtained:

1) The resistance of soil as measured by a penetrometer was found least in plots prepared with rotary cultivator (treatment A). Further, no significant differences in soil resistance were established for the rest of the treatments.
2) Shear strength of soil was found least in the case of rotary cultivator and highest in case of disk plow followed by cultivator.
3) The force exerted by a seedling during emergence was found minimum (20 gms) in the case of rotary cultivator and maximum (56 gms) in the case of disk plow followed by narrow-tine cultivator.
4) No significant difference in yield were noted between all the tillage treatments.

This may be due to the fact that

treatment plots were so much pulverized with the excessive use of implements that differences in yield were not clearly visible.

5) The net economic return (income from crop minus expenses on tillage) was found maximum for the plots prepared with disk plow followed by sweep cultivator (3 times), suggesting, thereby, a better performance of such a combination of tillage implements.

   The disk harrow (4 times) scored second, whereas rotary cultivator failed to offer good returns in the comparative list.

6) The conventional practice of plowing several times with a narrow-tine cultivator (6 times) could not prove its worth economically.

Effects with Primary and Reduced Secondary Tillage

As indicated above, the differences in yield between the plots prepared with the excessive use of implements have been insignificant. Consequently, in this part of the investigation, the secondary tillage operations were reduced to a certain extant. Again, since the rotary cultivator was not economically feasible, it was delected from the list of the implements. Further, operations were conducted on a different type of soil (loam) in order to accommodate the mouldboard plow. The primary and secondary operations, thus conducted are shown below:

Treatment	Primary Tillage	Secondary Tillage
A	Disk harrow	N.T. cultivator (twice)
B	"	Sweep cultivator (twice)
C	"	Disk harrow (twice)
D	Mouldboard plow	N.T. cultivator (twice)
E	"	Sweep cultivator (twice)
F	"	Disk harrow (twice)
G	N.T. cultivator (twice)	N.T. cultivator (twice)

The following results were obtained:

1) Different sets of implements mentioned above, produced different soil tilth, as measured by the penetrometer.
2) The bullock-drawn munnah plow produced maximum soil resistance.
3) The following sets of implements as shown by treatments A, D and G above responded poorly in reducing the penetration resistance of soil:
   i) Treatment A: Disk plow followed by N.T. cultivator (twice)
   ii) Treatment D: Mouldboard plow followed by N.T. cultivator (twice)
   iii) Treatment G: N.T. cultivator (4 times)

   This indicates a poorer performance of our conventional implement, the narrow tine cultivator.
4) The tillage treatments which included either disk harrow or sweep cultivator indicated better effects on soil pulverization.
5) Disk harrow or moldboard plow followed by disk harrow (twice) produced minimum shear strength of soil, indicating, superior performance of such a set of tillage implements.
6) Disk plow or moldboard plow followed by narrow tine cultivator produced high shear strength.
7) Bullock-drawn munnah plow created the lowest degree of pulverization of soil, since the resulting shear strength was found highest.
8) The force exerted by a seedling during emergence was found lowest (15 gms) in plots prepared by disk harrow in secondary tillage and highest (77 gms) in case of munnah plow.
9) The differences in yield produced by different sets of implements were significantly different. Yields were highest in plots prepared with disk harrow in secondary tillage and lowest in case of munnah plow.
10) The economic returns were found maximum for the plots prepared with disk harrow or sweep cultivator in secondary tillage.

Effects of Combined Primary and Secondary Tillage

As mentioned earlier, after performing primary tillage operations, the experimental plots were left as such for a certain period of time in order to allow the microbiological and aeration activities to occur before conducting subsequent secondary tillage operations. In this phase of the investigations, primary and secondary tillage implements were used in succession without any loss of time. Further, in the list of implements, subsoiler was added in order to break off hard pen. The following sets of implements were, thus, used on sandy loam soil:

Treatment	Tillage Implements Used
A	Subsoiler, N.T. cultivator (twice)
B	Disk plow, disk harrow, N.T. cultivator
C	Mouldboard plow, disk harrow, N.T. cultivator
D	Disk harrow, N.T. cultivator (twice)
E	Disk harrow (thrice)

The following results were obtained:

1) The differences in the soil moisture for different tillage treatments were significant.
2) The differences in soil density were insignificant for different treatments.
3) The differences in the penetration resistance of soil were significant for different treatments.
4) Shear strength of soil was lowest for operations with disk harrow

(3 times) and highest for subsoiler and moldboard plow or disk plow.

5) Emergence force of wheat seedlings was highest for subsoiler and plow (moldboard or disk) and lowest for disk harrow (3 times).
6) Emergence and yield of wheat was highest in case of disk harrow.

The above results indicate the superiority of disk harrow from the standpoint of soil characteristics and yield of crop.

Effects with Secondary Tillage Only

In this part of the investigation, primary tillage implements moldboard plow, disk plow and subsoiler were completely eliminated because of their ineffectiveness as mentioned above. Further, the frequency of secondary tillage operations was reduced. The following sets of implements were, accordingly, tried:

Treatment	Tillage Implements
A	Disk harrow (twice)
B	Sweep cultivator (twice)
C	Disk harrow, N.T. cultivator (twice)
D	N.T. cultivator (thrice)

The above tillage operations were applied for growing wheat and maize crops in succession on sandy loam soil. The following results were achieved:

1. The analysis of the penetration resistance data showed highly significant differences for different tillage treatments. The resistance was highest with the narrow tine cultivator (used thrice), as compared to other tillage operations.

   It is concluded from the above results that the conventional practice of using narrow tine cultivator does not produce a good seedbed which may be attributed to the fact that the narrow tine cultivator skips untilled soil between the tines and thus results in a cloddy surface which is hard to be pulverized with three passings. On the other hand, sweep cultivator and disk harrow, because of their greater surface area, may produce greater friction, resulting in a higher degree of pulverization at the soil metal interface.
2) Shear strength of soil was highest with narrow tine cultivator (thrice) or disk harrow followed by cultivator (twice) and lowest with sweep cultivator (twice) or disk harrow (twice).
3) The use of disk harrow (twice) and sweep cultivator (twice) resulted in a better emergence and yield of crops. It means that the two passings of sweep cultivator or disk harrow were more effective than the three passings of the narrow tine cultivator.
4) The cost of operation with disk harrow (2 times) was almost equal (approximately Rs. 150 per hectare) with that of sweep cultivator (twice).
5) The cost of operation with narrow tine cultivator (3 times) or disk harrow followed by narrow tine cultivator (2 times) was one and a half time that of disk harrow (2 times) or sweep cultivator (2 times). It means that two passings of the disk harrow or sweep cultivator are economically superior to three passings of the narrow tine cultivator.

Effects of Reduced Secondary Tillage

In this part of the investigations, the frequency of secondary operations was further reduced with a step-by-step approach of tillage reduction in order to minimize the manipulation of soil and to save fuel energy.

The point under consideration has been that the resulting seedbed is appropriate for crop growth without involving extra expenditure on tillage. The following sets of implements were, therefore, tried on two different soils (sandy loam and silty clay loam):

Treatment	Tillage Implements
A	Narrow tine cultivator (twice)
B	Disk harrow followed by narrow tine cultivator
C	Disk harrow (twice)
D	Sweep cultivator (twice)
E	Rotary cultivator (once)
F	Narrow tine cultivator (5 times) Control

The results of the above operations have been mentioned below:

1) Silty clay loam offered greater resistance to penetration than sandy loam soil. This means that heavier soil, richer in clay content, requires more plowing for achieving a suitable seedbed.
2) The following implements were determined to be most effective in reducing the penetration resistance:
   i. Disk harrow (2 times)
   ii. Sweep cultivator (2 times)
   iii. Rotary cultivator (once)
3) The above tillage treatments were relatively ineffective in reducing the shear strength of silty clay loam soil, as compared to sandy loam soil.
4) Disk harrow (twice) was most effective in reducing the soil strength. Sweep cultivator (twice) and rotary cultivator (once) were second to disk harrow. Narrow tine cultivator, once again, turned out poor amongst the treatments.
5) A greater emergence force was required by the wheat seedlings to emerge in silty clay loam soil as compared to sandy loam soil. This differential response may be associated with the differences in clay contents which contribute to the cohesiveness of soil and, in turn, increase the

emergence force.

6) Yields of wheat from the two soils were found to differ significantly. Silty clay loam yielded less, probably because of its high strength and greater penetration resistance.

   It may be inferred that the number of plowings be increased in heavy soil in order to achieve suitable soil tilth.

7) Yield of wheat was highest for operations with disk harrow (2 times). On the other hand, yields resulting from single operation of a rotary cultivator were not encouraging. Such a response may be due to the reason that rotary cultivator descreases micropored and upsets the air-moisture balance in the soil. The rotary cultivator may be a useful tool for rice cultivation where aeration is not a consideration during puddling operations.

8) Yields from the operation of a narrow tine cultivator for 5 times (our conventional practice) was not encouraging. Operations with disk harrow (2 times) or sweep cultivator (2 times) were more effective than those with narrow tine cultivator used 5 times. Further, the yield with narrow tine cultivator used 5 times. Furtrher, the yield with narrow tine cultivator (2 times) was the lowest of all the treatments.

9) The cost of operation per hectare with narrow tine cultivator (5 times) was determined highest as mentioned below:

Tillage Operation	Cost per Hectare
a) Narrow tine cultivator (5 times)	= Rs. 370
b) Rotary cultivator (once)	= Rs. 320
c) Disk harrow (twice)	= Rs. 190
d) Sweep cultivator (twice)	= Rs. 150

It may be observed that operations with sweep cultivator or disk harrow are cheaper as compared to other implements.

Viable Implements and Conclusions

It may be observed that the narrow tine cultivator and the conventional practice of plowing several times could not prove their worth in the light of the soil, crop and cost parameters considered in this study. It is inferred that excessive plowing be avoided and the use of narrow tine cultivator be restricted. The sweep cultivator was instead considered a better substitute of the narrow tine cultivator. The rotary cultivator failed to maintain its standing from the standpoint of economic return. The disk harrow performed best with respect to soil tilth, crop yield and cost of crop production. However, its higher initial cost and manufacturing complexity are the major constraints discouraging its large scale production and use. Further, heavy implements like mouldboard and disk plow had favourable effects on soil characteristics, when followed by disk harrow and sweep cultivator. Their use may, therefore, be avoided due to their high costs of operation.

REFERENCES

1. Buchele, W.F. and Sheikh. G.S. 1967. Application of soil mechanics to the emergence of seedlings. American Society of Agricultural Engineers paper.
2. Gill, W.R. and Vandenberg, C.E. 1967. Soil Dynamics in tillage aid traction. U.S. Department of Agriculture. Agriculture Handbook 316.
3. Sheikh, G.S. 1972. Soil cutting equipment and emergence of seedlings. Ph.D. thesis. Ames, Iowa, Library, Iowa State University.
4. Sheikh, G.S. 1976. Effects of different tillage practices on Soil Characteristics and Emergence of Wheat Seedlings under Irrigated Conditions. FAO Agricultural Sciences Bulletin 28. (Mechanization of Irrigation Crop Production) Processing of Expert Consultation held in Adana, Turkey.
5. Sheikh, G.S. J.K. Sial and M. Afzal, 1979. Comparative Performance of Two-Wheel and Four-Wheel Tractor. Journal of Agricultural Mechanization in Asia (A.M.A) Tokyo, Japan. Spring Issue.
6. Sheikh, G.S. J.K. Sial, and M. Afzal, 1980. Diak Harrow – An Appropriate Tillage Implement. Journal of Agricultural Mechanization in Asia (A.M.A) Tokyo, Japan. Autumn Issue.
7. Sial, J.K. G.S. Sheikh, and M. Afzal, 1981. Development and Comparative performance of a cultivator with Sweep Shovels. Journal of Agricultural Mechanization in Asia (A.M.A.) Tokyo, Japan. Spring Issue.
8. Khalid Pervez, J.K. Sial, and G.S. Sheikh, 1981. Technical and Economic Suitability of Tillage Implements under Irrigated Conditions. A Paper presented at the Second Annual Convention of Pakistan Society of Agricultural Engineers (PSAE) held at Lahore on April 9-10, 1981. ■■

Evaluation and Modification of Two Peanut Shellers

by
Gajendra Singh
Division of Agricultural and Food Engineering
Asian Institute of Technology
Bangkok, Thailand

Pinai Thongsawatwong
Agricultural Engineering Division
Ministry of Agriculture
Bangkhen, Thailand

Abstract

Two peanut shellers available in Thailand, one manual and other power operated, were modified to make them easy to operate and improve their performance. The improved manual peanut sheller has a mechanism to adjust the clearance, and round tooth shelling bars. The modified manual peanut sheller, operated by two men, has a capacity of 32 kg (seed)/h with about 4.8% breakage and 96% shelling efficiency.

For the power-operated peanut sheller, a feeding mechanism and a blower were designed. The modified sheller has a capacity of about 175 kg (seed)/h at 145 stroke/min shelling bar speed and 2 cm clearance. The machine has 97% shelling efficiency with 4.7% breakage, 0.2% blower loss, about 98.3% cleaning efficiency and the power consumption of about 2.2 kW.

Operating costs of both manual and power operated shellers with various cleaning methods were computed. At the present wage level, the minimum annual planted areas of peanuts to own a manually operated sheller with a winnowing basket and a winnower are 2.5 ha (2.0 t of seeds) and 1.6 ha (1.3 t of seeds), respectively. The minimum area for the ownership of the modified power operated sheller is about 3.1 ha (2.5 t of seeds).

Introduction

Peanut or groundnut (*Arachis hypogaea* L.) is a native of South America and the crop is now grown throughout the tropical and the warm temperate regions of the world. In 1981, it was estimated that just over 25.15 million ha were planted and 19.76 million tonnes were harvested at an average yield of 980 kg/ha. About 11.8 million tonnes were produced in Asia, with India being the largest producer in the world (6.2 million t)[1].

Peanut is one of the main crops in Thailand. During 1979/80 the total planted area was about 97 400 ha and the average yield was 1 150 kg/ha[2]. During 1980-1984 production is estimated to increase at 8% annually.

In Thailand, 67% of the peanuts are processed by the local peanut shelling factories[3]. Most farmers sell peanuts in pods because of their urgent need for money and the non-availability of a suitable peanut sheller.

Hand and mechanical shelling are the two methods used for peanut shelling. In hand-shelling farmers shell and separate the peanut kernels from the broken shells at the same time. These peanuts are mainly used for seed. Mechanical shelling is not widely used by farmers, as only a small number of simple manual operated shellers are available. Medium and large shellers operated by 7.5-12 kW engine are widely used by middlemen who buy peanut pods from farmers.

In this study, two peanut shellers, one manual and one power-operated sheller available in Thailand were evaluated and modified to improve their performance[4].

Peanut Shellers Available in Thailand

The manually operated peanut sheller (**Fig. 1**) consists of an oblong iron box, a 1.0 x 1.0 cm wire mesh concave and a set of four 5.8 x 22.0 cm spike-tooth shelling bars assembly attached to a steel pipe handle. As the handle is pushed back and forth, the semi-

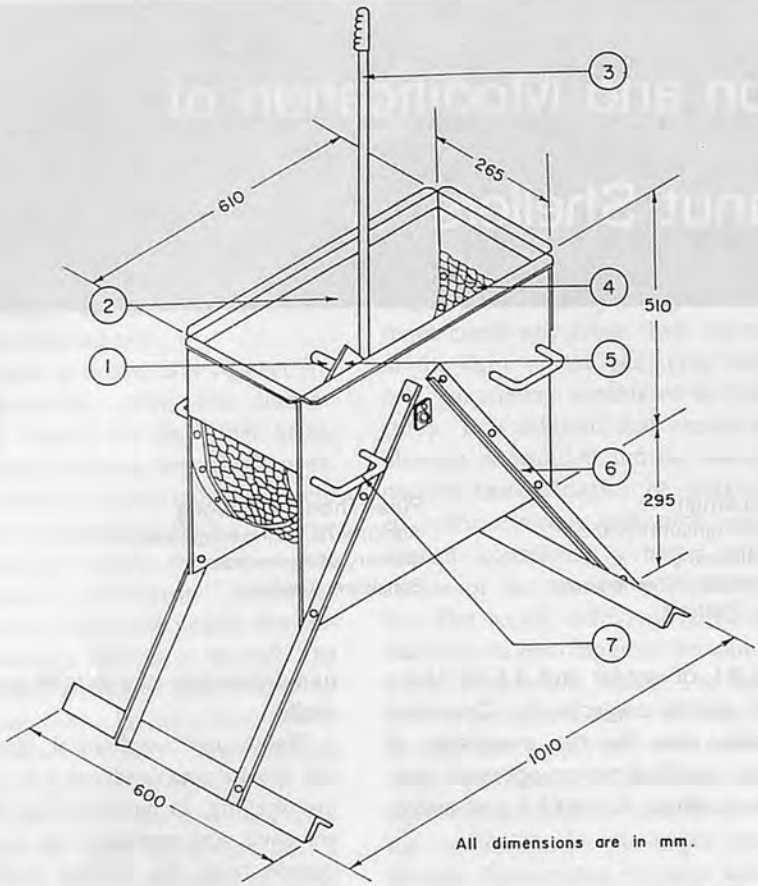

1. Shelling bar shaft
2. Shelling chamber
3. Handle
4. Wire mesh concave
5. Shelling bar frame
6. Support
7. Lifting handle

Fig. 1 Manually-operated peanut sheller.

rotary action of the shelling bars assembly breaks peanut pods and pushes them down through the holes of the wire mesh concave. The clearance between the shelling bar and concave is 1.6 cm.

The power-operated peanut sheller consists of an oblong box, a 1.0 x 1.0 cm wire mesh concave and a set of three 7.7 x 25.0 cm shelling bars assembly driven by a lever linkage in a semi-rotary action. Peanuts are shelled in the same way as in the manually-operated peanut sheller. The clearance between shelling bars and concave can be adjusted in the range of 1-1.5 cm.

Methodology

Modifications and Development

A clearance adjustment mechanism was made for the manually-operated peanut sheller. The clearance can be adjusted by inserting or taking off half-circular washers, each 1 mm thick, under the shelling bar shaft support. Three sets of shelling bars; four 5.8 x 22.0 cm spike-tooth bars, three 7.7 x 25.0 cm round-tooth bars and four 7.0 x 20.6 cm rubber tyre bars were used in the study[4].

A feeder and a 30 cm centrifugal blower were developed for the power-operated peanut sheller. The feeder consists of a hopper and a four-winged shaft feeder. The orthographic drawing and details of parts of the modified power-operated peanut sheller are shown in Fig. 2. During the performance test, three electric motors were used; 0.25 kW, 220 V, single phase motor, 1.1 kW and 1.5 kW, 380 V, three phase, adjustable speed motors. The rotating feed shaft, shelling bar and the blower were operated by these three motors, respectively. The feed shaft rotates at a constant speed, 40 rpm. Feeding rate was adjusted by changing the opening by setting the wooden flap at three positions.

Peanut Size and Moisture Content

For the performance test, the average size of peanut pods was 2.6 cm length and 1.2 cm width. Seeds were about 74% of pods by weight. The moisture content of peanut seed was about 9%. The average size of the unshelled pods was 1.7 cm length and 1.0 cm width.

For the varied moisture test the average size of peanut pods was 2.8 cm length and 1.3 cm width. Seeds were about 65% of pods by weight. Three levels of moisture: 10%, 16%, and 30% were used in the test. The average size of unshelled pods was 1.6 cm length and 0.9 cm width.

For the blower and work performance test, the average size of peanut pods was 2.7 cm length and 1.3 cm width. Seeds were about 72% of pods by weight. The moisture content of the peanut seeds was about 8.5%. The average size of the unshelled pods was 1.7 cm length and 0.9 cm width.

Cleaning Methods Used in Peanut Sheller Evaluation

In hand-shelling, the shells are separated at the same time that the peanuts are shelled. For shellers without cleaning mechanism winnowing baskets, a winnower and an IRRI grain cleaner were used.

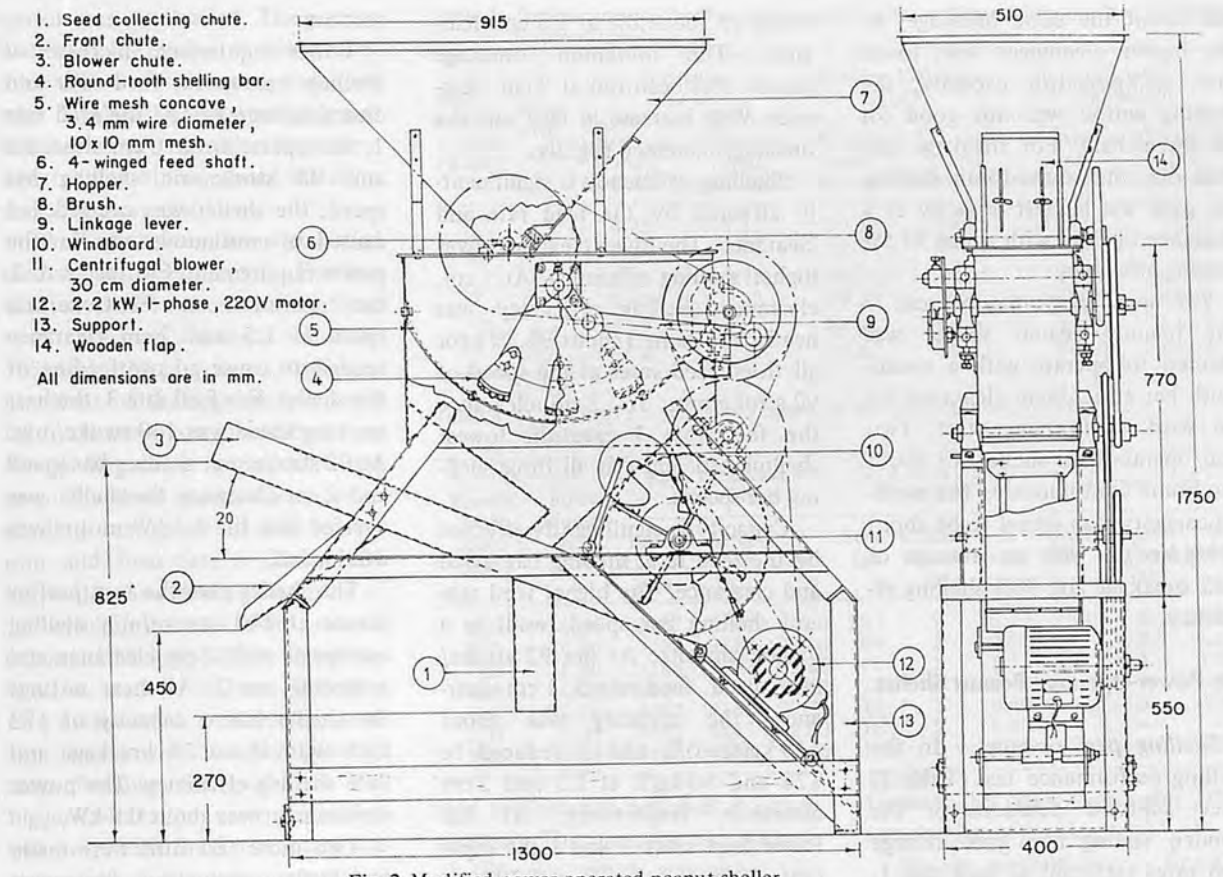

Fig. 2 Modified power-operated peanut sheller.

Results and Discussion

In the testing of the peanut shellers the performance parameters considered were breakage, shelling efficiency, capacity and power requirement. Breakage involves broken and split seeds and it was considered at 6% or lower. Shelling efficiency was considered at over 95%. Capacity should be as high as possible while power requirement should be as low as possible. The four parameters should be considered simultaneously in selecting the optimum performance of the machine.

The Manually Operated Peanut Sheller

Performance of three shelling bars – The results (Table 1) are based on shelling 3 kg of peanuts in each test run with three replications. It is evident from Table 1 that breakage, shelling efficiency and capacity decrease as the clearance increases. For all clearance settings the rubber-tyre shelling bar gave the maximum breakage, shelling efficiency and capacity. At higher clearances (2.4-3.0 cm) round-tooth and spike-tooth bars

Table 1 Performance of the Manually Operated Sheller Using Three Different Shelling Bars (Duration of test: 3 min.)

Clearance (cm)	Spike-tooth Bar			Round-tooth Bar			Rubber-tyre Bar		
	Breakage (%)	Shelling efficiency(%)	Capacity (kg(seed)/h)	Breakage (%)	Shelling efficiency(%)	Capacity (kg(seed)/h)	Breakage (%)	Shelling efficiency(%)	Capacity (kg(seed)/h)
0.4	18.96	99.35	61.24	32.66	99.39	70.77	–	–	–
0.8	10.19	98.57	54.70	14.64	98.64	69.93	26.71	99.63	113.05
1.2	6.44	97.06	53.56	11.15	98.38	70.15	19.60	99.26	108.30
1.6	5.34	97.26	54.12	7.56	98.49	70.68	13.14	98.95	95.92
2.0	4.64	96.56	43.03	5.90	97.35	61.88	10.05	97.98	80.91
2.4	4.00	95.41	37.91	3.80	97.46	57.44	8.84	97.35	68.17
2.6	3.76	92.53	26.79	4.12	96.75	49.13	–	–	–
2.8	–	–	–	3.98	96.51	44.57	8.17	95.67	52.75
3.0	–	–	–	3.87	96.10	33.98	–	–	–
3.2	–	–	–	–	–	–	6.93	95.84	52.03
3.6	–	–	–	–	–	–	6.65	94.18	45.68
4.0	–	–	–	–	–	–	4.57	93.99	36.45

had about the same breakage. At the higher clearances with lower than 35 kg(seed)/h capacity, the shelling action was not good for all three bars. For breakage less than 6%, the round-tooth shelling bar gave the highest capacity at a clearance of 2 cm with about 97.5% shelling efficiency.

The work performance test – The manual peanut sheller was selected to operate with a round-tooth bar at a 2.0 cm clearance for the work performance test. Two men operated the sheller for about two hours continuously. The working capacity was found to be about 32 kg(seed)/h with an average of 4.8% breakage and 96% shelling efficiency.

The Power-Operated Peanut Sheller

Shelling performance – In the shelling performance test (**Table 2**) three adjusted positions of the wooden sliding flap gave average feed rates (referred as feed rate 1, 2 and 3) of about 130, 180 and 280 kg(pod)/h, respectively. Three shelling bar speeds were 92, 115, 140 stroke/min and three different clearances were 1, 1.5 and 2 cm. The results are based on shelling 20 kg of peanut pods in each test run.

Breakage is significantly affected by the feed rate and clearance. The higher feed rate and the lower clearance cause more breakage. At 1 cm clearance for all three speeds, the breakage was about 20% and reduced to about 8% at 1.5 cm clearance. The minimum breakage (about 5%) occurred at 2 cm clearance. With increase in feed rate the breakage increased slightly.

Shelling efficiency is significantly affected by the feed rate and clearance. The lower clearance gives higher shelling efficiency. At 1 cm, clearance shelling efficiency was nearly the same (about 98.7%) for all three feed rates at the speed of 92 stroke/min. At 2 cm clearance the feed rate 1 gave the lowest shelling efficiency at all three shelling bar speeds.

Capacity is significantly affected by the feed rate, shelling bar speed and clearance. The higher feed rate and shelling bar speed result in a higher capacity. At the 92 stroke/min speed, feed rate 3, 1 cm clearance, the capacity was about 148 kg(seed)/h and it reduced to 128 and 90 kg/h at 1.5 and 2 cm clearance, respectively. At the lower feed rates 2 and 1 the capacity decreased by about 30 kg/h and 20 kg/h by changing the clearance from 1 cm to 2 cm, respectively. At 115 stroke/min speed, feed rate 3, the capacity decreased from 170 to 151 kg/h at 1 and 1.5 cm clearance. For 1.5 and 2.0 cm clearance the capacity was nearly the same. At the feed rate 2 and 1 the capacity decreased about 15 kg/h from 1 to 2 cm clearance. At 140 stroke/min speed, for all three feed rates, the capacity was nearly the same at all clearances. The feed rate 3 gave the maximum capacity in all test runs.

Power requirement increases as shelling bar speed, feed rate and clearance increase. At the feed rate 1, the operation at 2 cm clearance and 92 stroke/min shelling bar speed, the sheller was overfed and caused a continuous rise in the power requirement. For feed rate 2, the operation at 92 stroke/min speed at 1.5 and 2 cm clearance tended to cause an overfeeding of the sheller. For feed rate 3, the best working speed was 140 stroke/min. At 92 stroke/min shelling bar speed and 2 cm clearance the sheller was overfed and the 1.5 kW motor was overloaded.

The sheller gave the best performance at 140 stroke/min shelling bar speed with 2 cm clearance and a feeding rate 3. At these settings the sheller had a capacity of 172 kg/h with about 5% breakage and 96% shelling efficiency. The power requirement was about 0.9 kW.

Two more test runs were made for further evaluation. Increasing the shelling bar speed was impossible because of too much vibration and limited efficiency of the linkage levers. The clearance and the feed rate were increased. The conditions of the two test runs were: feed rate 4 (about 379 kg(pod)/h), 2 cm clearance; and feed rate 3 (about 280 kg(pod)/h), 2.5 cm clearance. The shelling bar speed was 140 stroke/min for both tests. For the two test runs, the power consumption rose very fast because the sheller was overfed and the 1.5 kW

Table 2 Shelling Performance of the Power-Operated Peanut Sheller at Different Shelling Bar Speed, Clearance and Feed Rate (20 kg pods for each test run)

Shelling bar speed (stroke/min)	Clearance (cm)	Breakage (%)			Shelling Efficiency (%)			Capacity (kg(seed)/h)		
		Feed rate 1	Feed rate 2	Feed rate 3	Feed rate 1	Feed rate 2	Feed rate 3	Feed rate 1	Feed rate 2	Feed rate 3
92	1	19.04	18.66	20.58	98.72	98.87	98.50	89.51	118.70	148.60
92	1.5	7.05	8.11	9.40	97.98	97.75	97.40	77.81	105.24	127.90
92	2	4.13	5.04	5.30	95.71	96.36	95.90	68.94	85.80	90.60
115	1	18.76	19.04	20.10	98.54	98.94	98.93	98.99	131.20	169.80
115	1.5	8.29	8.51	9.61	98.28	98.61	98.21	97.94	118.40	151.10
115	2	3.82	4.46	5.17	96.37	97.81	97.93	84.10	116.50	150.00
140	1	18.26	20.47	20.75	98.61	98.89	98.81	94.50	123.10	176.34
140	1.5	7.08	7.96	9.21	97.59	98.15	98.45	94.40	124.20	169.60
140	2	3.95	4.22	5.33	95.91	96.36	98.01	90.80	123.40	172.80

motor was overloaded. The performance of the sheller at 140 stroke/min with 2 cm clearance and feed rate 3 (about 280 kg(pod)/h) was still better and these settings were selected for blower speed selection and a long run test.

Shelling performance with varied seed moisture content – For the shelling performance test at three seed moisture contents of 10%, 16% and 30% (dry basis), two combinations of shelling bar speed and feed rate were considered based on the performance in previous test runs. The two combinations were: shelling bar speed of 140 stroke/min and feed rate 3 (about 197 kg(pod)/h; and shelling bar speed of 115 stroke/min and feed rate 2 (about 132 kg(pod)/h). Clearance was set at 1.5 or 2 cm. The feed rate at the same wooden flap position was lower than the previous tests because the pod size was bigger while the seed percentage was only 65%. Seed percentage was about 74% in the previous test. For the same volume the pods used in varied moisture content test were lighter in weight. The results of the performance tests are given in **Table 3**.

Table 3 Performance of the Power-Operated Sheller at Three Different Seed Moisture Content Levels

Seed moisture content (% db.)	Clearance (cm)	Breakage (%)		Shelling Efficiency (%)		Capacity kg(ssed)/h	
		140 stroke / min, feed rate 3	115 stroke / min, reed rate 2	140 stroke / min, feed rate 3	115 stroke / min, feed rate 2	140 stroke / min, feed rate 3	115 stroke / min, feed rate 2
10	1.5	6.25	5.32	99.77	99.76	109.65	78.06
	2.0	4.31	3.78	99.76	99.71	110.29	75.59
16	1.5	3.72	2.75	99.91	99.89	106.89	67.58
	2.0	1.93	1.32	99.39	99.85	101.92	68.45
30	1.5	9.87	8.31	99.83	99.93	82.79	64.77
	2.0	7.78	6.17	99.82	99.81	86.42	61.74

Table 4 Cleaning Percentage and Losses of the 30 cm Blower at Different Shaft Speeds

Blower shaft speed (rpm)	Power requirement (kW)	Seed Collected at Seed Chute			Seed Collected at Front Chute			Blower Loss		
		Before clean (g)	After clean (g)	% clean	Seed (g)	Unshelled seed (g)	% seed	Seed (g)	Unshelled seed (g)	% loss
800	0.34	3807	3794	99.66	282	9	6.70	250	3	5.83
750	0.32	3339	3310	99.13	89	5	2.60	217	3	6.10
700	0.30	3186	3182	99.87	40	5	1.33	161	1	4.78
650	0.28	3894	3874	99.48	15	1	0.40	79	5	1.99
600	0.26	4202	4183	99.55	11	7	0.40	42	5	0.90
550	0.25	4493	4445	98.93	16	2	0.40	–	–	–
500	0.24	3587	3503	97.66	14	2	0.50	–	–	–

Breakage is significantly affected by the shelling bar speed and feed rate combination, seed moisture content and clearance. At all three seed moisture content levels the breakage was more at the lower clearance of 1.5 cm compared to 2 cm clearance setting. The lowest breakage occurred at the 16% (db) seed moisture content.

Shelling efficiency is significantly affected by the seed moisture content and clearance. The percentage of shell in every test run was over 99%. The higher shelling efficiency in these tests was most probably due to larger average pod size compared to previous tests.

Capacity was calculated based on the seed weight at 10% moisture content (db). Capacity is significantly affected by the speed-feed rate combination and seed moisture content. The capacity was highest at 10% m.c. which was about 110 kg(seed)/h at the 140 stroke/min shelling bar speed. Compared with the capacity of the previous test (172 kg(seed)/h) the lower capacity of this test resulted from the lower feed rate and the lower percentage of seeds in pods.

For both speed-feed rate combinations at 1.5 and 2 cm clearance power requirement increases as the seed m.c. increased. The power requirement at 2 cm clearance was greater than at 1.5 cm clearance for both speed-feed rate combinations.

From the results discussed above, shelling at about 16% seed m.c. gave quite a low percentage of breakage of about 2% at 2 cm clearance with only slight decrease in capacity of about 3 kg/h at 140 stroke/min speed and feed rate 3. But the problem is that when the peanuts are not dry enough after shelling the seeds must be dried again. Farmers mostly use sun drying method by spreading the seeds on the floor and rake tham few times to dry them thoroughly. This causes a lot of breakage.

Blower performance – For the blower performance test, the sheller settings were 140 rpm shelling bar speed, 2 cm clearance and feed rate 3. The blower shaft speed was varied from 500-800 rpm at the full winboard opening. From **Table 4**, it is clear that at the blower shaft speeds of up to 550 rpm there was no blower loss but the percentage of clean was slightly low. The working speed of the blower shaft was set at 700 rpm. That was a slightly higher blower speed but was provided to be suitable for the peanuts with thicker and heavier shells as well as higher moisture content peanuts. The wind speed can be reduced to the optimum speed by the windboard opening adjustment.

Work performance of the modified power operated peanut sheller – For the work performance test, the sheller was operated by a 2.2 kW, 220 V, single phase motor (speed 1450 rpm). The operation settings were the same or close to the best settings found in the previ-

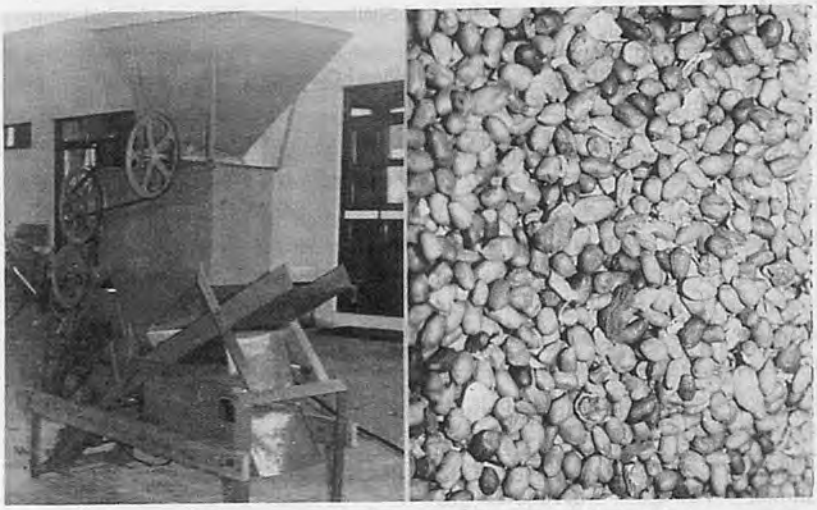

Fig. 3 The modified power-operated peanut sheller and shelled seeds.

ous tests depending on the available pulley sizes. The speed of the shelling bar shaft was set at 145 stroke/min, the feeder shaft at 40 rpm and the blower shaft at 725 rpm. The machine was run for about 90 minutes. The average feed rate was about 250 kg(pod)/h. Modified power operated peanut sheller and shelled seeds are shown in **Fig. 3**.

The average capacity of the sheller was about 175 kg(seed)/h with about 4.7% breakage, 97% shelling efficiency, 0.2% blower loss and 98.3% clean. The cleaning percentage was slightly lower than that in previous test because the natural wind blew against the direction of the sheller blower. Some broken shells and dust already blown fell on the seeds collected in a tray. The power consumption was about 2.2 kW.

Cost Comparison

In determining the operating cost, shelling and cleaning costs were considered. The shelling and cleaning capcity, power and labor requirement of three methods are given in **Table 5**.

The costs of the machines are divided into two components: annual fixed cost and variable costs. Annual fixed costs include depreciation, interest, taxes, insurance and shelter costs. Variable costs include cost of power, labor and repairs and maintenance.

The following assumptions were made in the cost determination.

1) Machines and power sources cost:
   - Purchase price of the manual peanut sheller US$110.00
   - Purchase price of the power operated peanut sheller
     - with feeder $240.00
     - with feeder and blower $305.00
   - Purchase price of a winnower $ 90.00
   - Purchase price of the IRRI grain cleaner $205.00
   - Purchase price of the motor
     - 2.2 kW, single phase, 220 V motor $195.00
     - 0.38 kW, single phase, 220 V motor $ 60.00
2) Machine life (all machines) 5 years
3) Salvage value 10% of purchase price
4) Annual interest rate 19% on average investment
5) Labor wage $2.17/8 h
6) Electricity cost $0.053/kWh
7) Taxes, insurance and shelter 2% of purchase price
8) Repair & maintenance cost 8% of purchase price per 100 h
9) Peanut production yield, avegage of 1978-81 (2) 1 100 kg (pod)/ha or, 72% of seed from pod 790 kg(seed)/ha
10) Peanut prices, aveage of 1980-81(4)
    - dry pod $0.31/kg
    - 1.4 kg dry pod which contains 1 kg seed $0.43
    - ungraded seed $0.50/kg

Table 5 Labour and Power Requirement in Using Different Peanut Shelling and Cleaning Methods

Method or machine used	Cleaning method	Capacity kg(seed)/h		Labour Requirement		Power Source		Power Requirement (kW)	
		Shelling	Cleaning	Shelling	Cleaning	Shelling	Cleaning	Shelling	Cleaning
Hand shelling	By hand	0.5		1 man		–		–	
Manual peanut sheller	Winnowing	32	8.3	2 men	1 man	–		–	
	Hand-operated winnower	32	280	2 men	2 men	–		–	
Power peanut sheller	Power-operated winnower	175	1060	2 men	2 men	2.2 kW, 220 V single phase motor		2.0	1.85
	IRRI grain cleaner	175	320	2 men	2 men	2.2 kW, 220 V 1 phase	0.38 kW, 220 V 1 phase	2.0	0.58
	Self-cleaner	175		2 men		2.2 kW, 220V single phase motor		2.2	

Table 6 Estimated Costs of Machine and Hand-Shelling of Peanuts

Shelling and cleaning method	Annaul Fixed Cost $/Year				Variable Cost $/t			
	Depre-ciation	Interest	Taxes, insur. & shelter	Total	Repair & maint.	Labor	Power	Total
Hand shelling	–	–	–	–	–	540.00	–	540.00
Manual peanut sheller	19.57	11.36	2.17	33.10	2.72	16.95	–	19.67
Winnowing basket	–	–	–	–	–	32.68	–	32.68
Manual winnower	15.66	9.09	1.74	26.49	0.25	1.94	–	2.19
Power sheller without cleaner, 2.2 kW motor	78.19	45.39	8.69	132.27	1.99	3.10	0.61	5.70
IRRI grain cleaner, 0.38 kW motor	47.34	27.48	5.26	80.08	0.66	1.70	0.10	2.46
Power sheller with cleaner, 2.2 kW motor	89.93	52.21	9.99	152.23	2.28	3.10	0.67	6.05

Table 6 contains the cost estimates for the peanut shelling methods. Annual depreciation was estimated using straight line method and interest charge was based on average investment in the machine over its five years of life.

The total cost per year for the machine can be expressed as:

$$AC = (FC\%)P/100 + Q((R\&M) + F + L)/C \quad \ldots\ldots\ldots\ldots (1)$$

where AC = Annual cost of operating the machine

FC% = Annual fixed cost percentage

P = Purchase price of the machine, $

C = Capacity of the machine, t/h

Q = Total quantity of peanuts shelled in a year, t

R&M = Repair & maintenace cost, $/h

F = Fuel or electricity cost, $/h

L = Labour cost, $/h

Based on the average yield of 1.1 t(pod)/ha or 0.79 t(seed)/ha the area (A) needed to produce quantity Q can be computed by

$$A = Q/Y$$

The relationship between the total cost per hectare, the total cost per ton and annual planted area are shown in Fig. 4. The hand shelling method has a very high operation cost ($540/t) and should be used for shelling only for seeding purpose. The operation costs of the power sheller with a winnower and an IRRI grain cleaner are higher than the cost of the modified self-cleaning power sheller at all quantities shelled. The modified power sheller has the lowest operation cost for the planted area of 7.4/ha (5.9 t of seeds) or over.

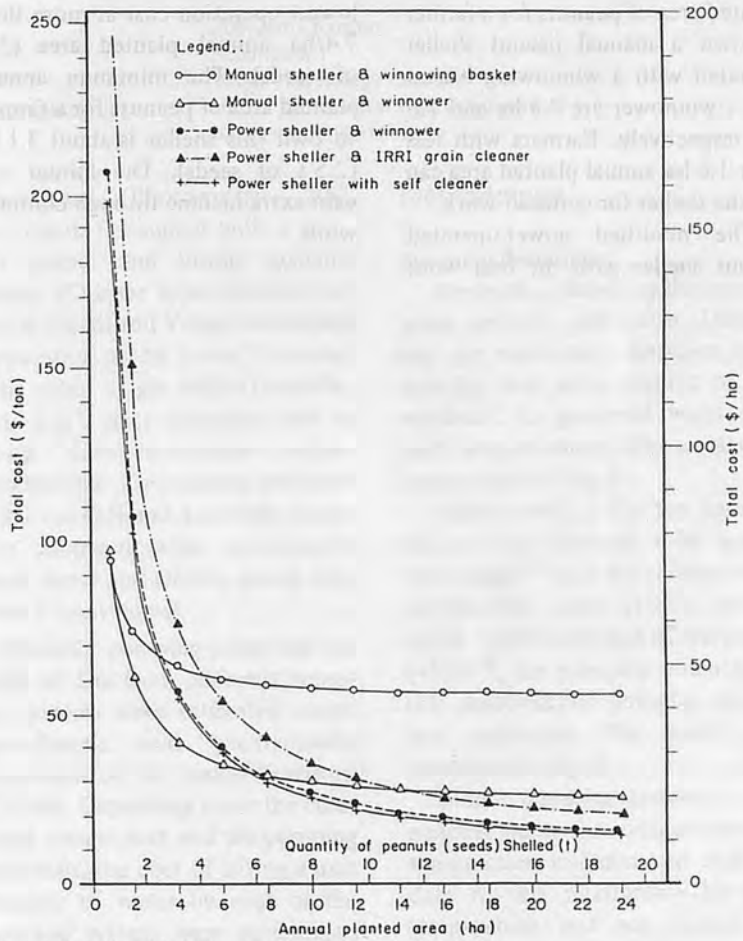

Fig. 4 Relationship between total cost and annual use.

The minimum areas for farmers to own a peanut sheller were determined by comparing the extra income of $54.65/h or $69.0/t by selling ungraded seeds and the operating cost of peanut shellers. A farmer can own a manual sheller with a winnowing basket having 2.5 ha (2.0 t of seeds) or more planted area and a sheller with a winnower at 1.6 ha (1.5 t of seeds) or more. For a power sheller with a winnower and an IRRI grain cleaner, farmers should have the annual planted area of about 3.2 and 4.4 ha (2.6 and 3.5 t of seeds) respectively. For the modified peanut sheller the minimum annual planted area is only about 3.1 ha (2.5 t of seeds).

Conclusion

The performance of the manual peanut sheller was improved by using a round tooth shelling bar and the clearance adjustment mechanism. The capacity of the sheller operated by two men was about 32 kg(seed)/h with about 4.8% breakage and 96% shelling efficiency. The minimum annual planted area of peanuts for a farmer to own a manual peanut sheller operated with a winnowing basket and a winnower are 2.5 ha and 1.6 ha, respectively. Farmers with less than 1.6 ha annual planted area can use the sheller for contract work.

The modified power-operated peanut sheller gave the best work performance at 45 stroke/min shelling bar speed, 2 cm clearance, a feed rate of about 250 kg (pod)/h and a blower shaft speed at 725 rpm. The effective capacity of the modified power sheller was 175 kg (seed)/h operated by two men. The power consumption was about 2.2 kW.

The modified power peanut shellers was found to have the lowest operation cost at more than 7.4/ha annual planted area (5.9 of seeds). The minimum annual planted area of peanuts for a farmer to own this sheller is about 3.1 ha (2.5 t of seeds). The farmer can earn extra income through contract work.

REFERENCES

1. Food and Agriculture Ortanization, 1982. Monthly Bulletin of Statistics, Vol. 5, No 1, January.
2. Office of Agricultural Economics, Ministry of Agriculture, 1980. Agricultural Statistics of Thailand – Crop Year 1979/80.
3. Veerakul, P. 1981. Investment of Peanut and Sesame Production. Office of Agricultural Economics, Ministry of Agriculture, Thailand.
4. Thongswatwong, P. 1982. Testing and Modification of Two Peanut Shellers. M.Eng. Thesis (unpublished), Asian Institute of Technology, Bangkok, Thailand.
5. Office of Agricultural Economics, Ministry of Agriculture, 1982. Statistics of Prices of the Agricultural Products, 1979-81, Thailand. ■■

Renewable and Non-renewable Resources in Irrigation Pumping

by
T.B.S. Rajput
Scientist S-1
Water Technology Centre
Indian Agricultural Research Institute
New Delhi 110012, India

Ashwani Kumar
Scientist S-1
Water Technology Centre
Indian Agricultural Research Institute
New Delhi 110012, India

Abstract

Appropriateness of renewable energy resources in irrigation pumping, namely; windmill pumping system, solar pump and bio-gas pumping systems (Janta and KVIC models) were studied under Delhi's agro-climatic conditions. Their annual costs and possible potential outputs were estimated, including the cost of water from different systems.

Introduction

Shortage in fossil fuel supplies and seasonal inadequacies of hydro-electric power have focussed the attention of irrigationists to depend more and more on renewable energy resources, particularly for small farms. Emphasis on minor irrigation for the integrated rural development has further increased the need to develop and adopt appropriate technology for the utilization of renewable energy sources in pumping irrigation water. Possible renewable energy sources which have shown their viability for lifting irrigation water are energy from natural wind, solar radiation and bio-gas.

The scope, appropriateness and economic analysis of a windmill system with a matching pump, a solar panel (Photo-voltaic, 300 watt (peak)), coupled with a suitable pump, and biogas systems (Janata (Chinese type-drumless) as well as Khadi and Village Industries Corporation model (using floationg metal drum as gas holder) models, both 3 m^3 size) matched with a 5.0 hp diesel-cum-biogas engine (smallest size of the engine available in the market) and a suitable pump were compared with the conventional diesel and electric pump sets (both 3 hp systems).

Monthly pumping potentials for a lift of 5 m from different pumping systems were estimated under agro-climatic and geo-hydraulic conditions of the Union Territory of Delhi. Depending upon the computed annual cost and the pumping potentials, the cost of lifting a unit quantity of water by each of the pumping system were determined and compared.

Three crop rotations, namely, (1) rice-wheat, (2) mung-maize-wheat and (3) mung-maize-potato-wheat were selected and their monthly net water requirements for the whole year were estimated. Based on these estimates, the net irrigation requirements of the crops in the different rotations and the pumping potentials of different pumping systems were estimated.

Methodology

Pumping Potentials

Windmill – Based on the average wind velocity pattern in Delhi[1] and the relationship between wind velocity and water output of the windmill, its potential water outputs were estimated. The results are summarised in **Fig. 1**.

Solar pump – On the basis of the monthly average solar insolation values[2] and the efficiencies of photovoltaic panel (10%), electric motor (60%) and that of the pump (45%)[3], the pumping potential of the photo-voltaic pumping system was estimated. The results are presented in **Fig. 1**.

Biogas pumping systems – Depending upon the average seasonal temperature in Delhi and available data on the relationship between temperature and gas output for Janata[4] as well as KVIC biogas plants[5], the total gas production in different months were estimated. Based on the estimated number of operating hours of a 5 hp engine (1.67 m^3 gas/h)[6], potential water output were estimated.

Diesel and electric pumpsets – Normal working hours of the diesel and electric pumpset were taken as 2000 h/year[7]. Potential water output of these systems were compiled taking the efficiency of electric motor as 80% diesel engine of

60% and that of the pumps as 45%.

Cost of water

The cost of a unit quantity of water lifted by the different pumping systems was obtained by dividing the total annual cost of a system by its annual pumping potential. The annual cost of each pumping system was determined on the basis of detailed component analysis of different fixed and operating costs. However, the cost of the development of water resource was not includedwith any of the pumping systems. The following procedure was adapted for calculating the annual cost of different pumping systems:

Depreciation – The annual depreciation of a system was obtained by dividing the difference between initial cost and salvage value by its useful life.

Interest – Assuming an annual interest rate of 10% the average annual interest (I) was calculated as follows:

$$I = \frac{(\text{Initial cost} - \text{Salvage value}) \times \text{Interest rate}}{2}$$

Insurance – One percent of the initial cost of the establishment of a system was assumed as its annual insurance charges.

Fuel consumption – The windmill and solar pump do not consume any fuel but the biogas plants need daily feeding of cowdung mixed with equal amount of water for which the cost of one man-hour per day was considered. Since the outcoming slurry from a biogas plant is a better manure than the cowdung itself, the cost of cowdung was neglected. In the biogas pumping system the engine consumes biogas and diesel in a ratio of 80:20. Therefore, the cost of the required diesel was considered. In the case of the diesel engine and electric pumping systems, the costs of diesel and electricity, for 2000 h of operation, was used.

Lubrication – The lubrication cost for solar pump and electric motor-driven pumpset were considered negligible but for the windmill it was assumed as Rs. 50 per year[9]. Diesel as well as diesel-cum-biogas engines require grease @ 4.5 l/hp/h[7]. Therefore, for these the cost of grease was calculated depending upon the hours of operation per year.

Maintenance and repairs – The annual repair and maintenance cost for windmill was taken as Rs. 300[9], but for other systems it was calculated from the following relationships:[10]

Diesel as well as diesel-cum-biogas engines: $= \frac{150\% \text{ of initial cost}}{\text{Useful life}}$

Electric motor: $= \frac{100\% \text{ of initial cost}}{\text{Useful life}}$

In the case of KVIC type biogas plant, the metallic gas holder needed cleaning, and painting once a year the cost of which was taken as Rs. 50.

Operator's wages – The operator's wages were considered equal to the operation hours of the different systems, except that in the case of solar pump and the windmill where no operator was required.

Net Irrigation Requirements

The net irrigation requirement of a crop was taken as equal to its total water requirement less the effective rainfall during the crop's growing period. The total water requirement of each crop was distributed monthly over its growing period, depending upon the occurence of its different physiological stages which require irrigation[11]. Under the agro-climatic conditions of Delhi, the mean monthly rainfall[13] and consumptive use of selected crops in different months were obtained[12]. The monthly effective rainfall for different crops were estimated utilizing this information and employing the modified USDA (SCS 1969) method.

The net irrigation requirement of different crops were compared with the pumping potential of different systems for corresponding periods and crop areas (ha) of different renewable energy sources pumping systems were estimated.

Results and discussion

Pumping potentials

The amount of water that can be

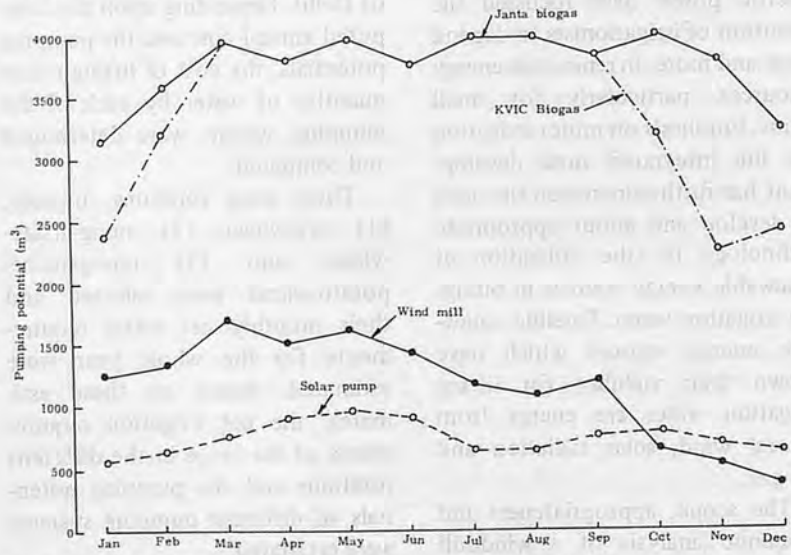

Fig. 1 Monthly pumping potential of different pumping systems.

lifted by a windmill, solar pump and biogas pumping systems depend upon climatic parameters, namely, wind velocity, solar insolation and temperature, respectively. Since these parameters keep on changing with respect to time, their monthly average performance were computed and their pumping potentials were estimated. The results are presented in **Fig. 1**.

The biogas system has more pumping potential than the windmill and solar pumping system. Among the two biogas systems under study, the Janata model has a little more potential than the KVIC model, particularly in winter because of its being burried under the soil and experiencing lesser effect on gas output by the change in atmospheric temperature. It may be noted from **Fig. 1** that the pumping potential of the windmill is 1½ to 2 times than that of a solar pumping system, except in the months of October, November and December. Total annual pumping potentials of electric and diesel pumping systems (2000 h operation) were estimated to be 115,200 m^3 and 86,400 m^3 respectively.

Economic Considerations

The annual cost of diesel pumping system is highest, followed by the solar pump, electric pumping system, KVIC biogas system and the windmill pumping system in that order **(Fig. 2)**. It may be noted from **Fig. 2** that the annual fixed cost is highest (Rs. 4,645) for the solar pump, followed by the windmill, KVIC biogas, Janata biogas, and electric pumping system. However, the operating annual cost is highest (Rs. 7,927) for the diesel pumpset and lowest (Rs. 100) for the solar pump.

Unit cost of water

The cost of water (100 m^3) from each system was computed and the results are presented in

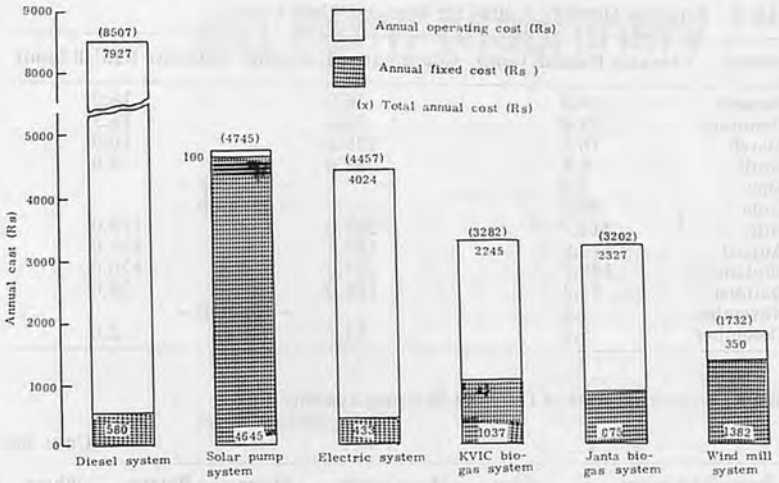

Fig. 2 Fixed and operating annual costs of pumping systems.

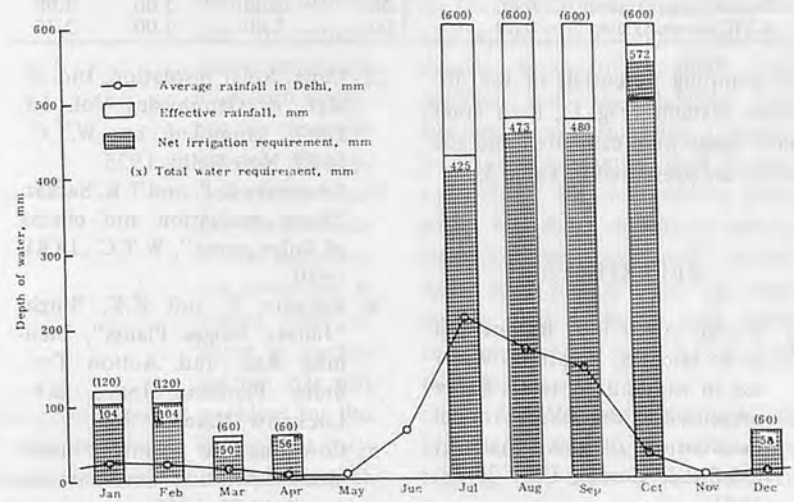

Fig. 3 Monthly effective rainfall and net irrigation requirement of rice-wheat crop rotation under agroclimatic conditions of Delhi.

Table 1 Comparative Costs Water Lift from a Depth of 5 m^2

Pumping System	Total Annual Cost (Rs)	Potential Annual Discharge (m^3)	Cost of Water (Rs/100 m^3)
Windmill	1 732	13 990	12.40
Solar pump	4 745	8 890	53.40
Janata biogas pump	3 202	45,370	7.06
KVIC biogas pump	3 282	41 070	7.99
Diesel pump	8 507	86 400	9.96
Electric pump	4 457	1 15 200	3.87

Table 1. The cost of a unit quantity of water is highest for the solar pump and minimum for the electric pumpset. The cost of water lifted by the windmill and diesel pumping systems are quite close and comparable.

Command Areas

The effective rainfall values for different crops are shown in **Table 2**. **Fig. 3** presents the monthly net irrigation requirements of the rice-wheat crop rotation.

Based on the net irrigation requirements of crops **(Fig. 3)** and

Table 2 Effective Monthly Railfall for Rice and Wheat Crops

Month	Average Rainfall (mm)	Consumptive Use (mm)	Effective Railfall (mm)
January	24.9	46.5	16.0
February	21.8	78.4	16.5
March	16.5	139.5	10.0
April	6.8	99.0	4.0
May	7.9	– No crop –	
June	65.0	– No crop –	
July	211.7	285.0	175.0
August	172.9	167.4	127.0
September	149.7	204.0	120.0
October	31.2	186.0	28.0
November	1.2	– No crop –	
December	5.2	52.7	2.0

Table 3 Command Area of Different Pumping Systems

(Unit: ha)

Pumping System	Rice	Mung Beam	Maize	Potato	Wheat
Windmill (12PU 500)	0.25	2.50	2.50	0.40	0.80
Solar pump	0.15	2.00	2.00	0.50	0.60
Janata biogas system	0.60	5.00	5.00	2.00	3.00
KVIC biogas system	0.60	5.00	5.00	2.00	2.75

the pumping potentials of the different systems (Fig. 1), their command areas were estimated and the results are presented in Table 3.

REFERENCES

1. Kumar A., T.B.S. Rajput and A.M. Michael, "Optimal water use in windmill system", Paper presented at the XVIII Annual Convention of ISAE held at C.S.S.R.I. Karnal, Feb. 26-28, 1981.
2. India: Solar insolation, Ind. Jl. Met. & Geophysics Vol. 18, 1967, compiled by W.T.C., IARI, New Delhi, 1975.
3. Srivastava K.P. and T.K. Sarkar, "Field evaluation and testing of Solar pump", W.T.C., IARI, 1980.
4. Bahadur S. and K.K. Singh, "Janata biogas Plants", Planning Res. and Action Div., State Planning Inst., U.P., Lucknow, March 1980.
5. Cowdung gas plant: "Installation operation and maintenance", IARI, 1980.
6. Operation mannual of diesel cum biogas engine", Pumps section Kirloskers, India, 1978.
7. Michael A.M., "Irrigation: Theory and Practice", Vikas Publishing House, New Delhi, 1978.
8. Chauhan H.S., C.S. Jaiswal and I. Singh, "Cost analysis of water source and pumping units for irrigation," Ind. Jl. agric. Sci. 43(a): 851-854, 1973.
9. "TOOL-ORP windmill project evaluation report", TOOL-ORP windmill project, Ghazipur, 1979.
10. Chauhan H.S., S. Ram, S.K. Trivedi and H.C. Sharma, "Selection, installation & Operation of horizontal centrifugal pumps for irrigation", G.B.P. Univ. of Agric. and Tech. Pantnagar, 1979.
11. Basins, S.S. "Recent research on multiple cropping", IARI, Research Bulletin, New Series No. 8, IARI New Delhi, 1972.
12. Hukkeri, S.B. and S.L. Pandey, "Water requirement and irrigation of crops", IARI Monograph No. 4, IARI, New Delhi, pp. 163-285, 1977.
13. "Climatological tables of Observatories in India (1931-1960)", India Met., Dept., Govt. of India, Pune, p. 127, 1970.

Selecting and Adapting Farm Machinery to Rural Conditions

by
J.C. Igbeka
Senior Lecturer
Department of Agricultural Engineering
University of Ibadan
Ibadan, Nigeria

Abstract

A review of the status of farm mechanization in Nigeria reveals the use of three types of tools, hand-operated, animal-drawn and motorised types. These tools were evaluated and suggestions for improvement, adaptation and selection were made.

Introduction

One of the greatest resources of developing countries is their soil. Nigeria is blessed with vast and comparatively fertile soil. This makes agriculture a profession that should be given priority in the development of the country. Under the present condition of agriculture in the country, a farmer can only produce his own food and perhaps feed three others. About 80 percent of the country's adult population is supposed to be engaged in agriculture, but the average income per capita per year of the Nigeria farmer is estimated at only $80.00. This places the Nigerian farmer's productivity in the bottom one-third. The 19 states and the Federal Goverment have embarked on the development of the country's agriculture through mechanization. The term mechanization "encompasses the use of hand and animal-operated tools and implements as well as motorised equipment to reduce human efforts, improve timeliness and quality of various farm operations in an attempt to increase productivity and overall efficiency".(3) When mechanization is considered in this context, the problem arises: which of the three mentioned type of tools or machines is suitable for the present stage of agricultural development or mechanization. Much attention has not been paid to this problem by the bodies concerned. Either that they have not realised the choice of machinery as a problem or that mechanization has been pursued only in one direction.

This paper is meant to review the problems involved in choosing the type of machine or tool for the mechanization of agriculture in Nigeria, hand-operated, animal drawn and motorised types.

Hand-Operated Tools

The use of hand tools in Nigeria's agriculture has been a very forceful repellent to modernizing farming. They will progressively be more repulsive in future until something drastic is done.

A wide variety of hand-operated tools and implements is available. The differences in their use relate to the variation in crops, soil and vegetation. For example, there are various types of hatchets and cutlasses used in vegetation control and land preparation. Generally, the long heavy cutlass is used for felling big and strong trees while the short cutlass is usually used for light and small shrubs. Also, short-handle hoes are commonly used in heavy soils while the long-handle type is confined to light soils.

There had been attempts to introduce other types of hoes in Nigeria, but these were not given thorough engineering analysis. These included the Indian and the Dutch hoes. A simple mechanical analysis of the comparison between short- and long-handle hoes made(2) reveals the following:

> That in respect of jobs which require scooping of the soil towards the worker, a short handle will mean less load (i.e. the product of small leverage, due to short handle, and the resistance, K, of the scooped soil) than with the long-handle type (i.e. the product of the bigger leverage and the same resistance, K,) and, therefore, requires less efforts per the same amount of soil thus scooped. Similarly, the distance traversed in both directions - push and pull, would be shorter

in the case of the short-handle hoe. This will result in less work being done in both ways and so lesser negative work.

From the above it could be deduced why the West Indian hoe failed to attract the Nigerian local farmers compared with the indigenous short-handle hoe. The same mechanical analysis of the leverage effect of the tool's handle can also be applied in the use of the spade or shovel, whereby the spade is held with one hand, right at the base of the blade when a job has to be done fast and smartly. In both cases bending or stooping results in some physical ailment.

The Dutch hoe for the same reason of long-handle is only useful with light soil and light weeding. In Nigeria, the farmer usually wants to weed his farm only a very limited number of times, therefore, he allows the weeds to grow to a certain height and density, though not to threaten the crops, before weeding. At this state, the Dutch hoe can no longer cope with the job.

Also, with the digging-spade used in Italy, Syria, Iraq and other parts of the world, it will be seen that its use in tillage requires two operations, viz: (1) penetration and (2) turning the soil. The second operation requires some bending of the body and shifting of the hand near the spade. It is apparent that the two operations would together take longer time and greater expenditure of efforts to accomplish a job than the short-handle hoe, under local condition.

With the Chinese type hand-drawn plow, a thoroughly clean land will be necessary as a prerequisite to adopt it. The costs of getting land into such a state will be very prohibitive in certain parts of the country, except in places that have been cropped for many years.

The rotary hand-weeder like the Dutch hoe will only be adaptable for well prepared seed-bed, light soil and light job.

In the case of a drag-type seed-drill, the soil must also be thoroughly clean, a condition which, as earlier stated, is hard and expensive to attain.

The possibilities of improving some of the hand tools are not ruled out but there are three major difficulties:

(a) A lot of research work and time will be required either to modify these tools or make new introduction;
(b) There is a dearth of experts available for such jobs, and
(c) The negative attitudes of the farmers on the use of hand tools.

The young generation of farmers will be school leavers and more educated than the present illiterate farmers whose number is fast diminishing. These educated farmers undoubtedly will detest the adoption in farming of any implements that will entail more difficult manual work than is the case in other jobs that people of their own comparable education do, e.g., engine operation, motor-vehicle driving, etc.

It has to be mentioned that any improvement in local tools will be dependent on many factors. Firstly, the availability of local craftsmen trained in better manufacturing techniques. The training of these personnel will take time. Secondly, it will be difficult to get suitable materials. Most of Nigeria's raw materials of construction are imported. The situation might change when the iron and steel industries go into full operation. It should also be noted that this improvement might require changes and improvement in the crops to grow and their cultural practices. There are some soils in Nigeria, in Gongola and Benue basin which do not lend themselves easily to hand-tool operation.

Animal-Drawn Implements

In areas free of the tse-tse fly, the number of farms employing animal-drawn implements continues to rise. There is much need to explore the potentiality of the middle belt area with regard to animal-drawn implements. But the possibility of employing animal-drawn implement in cultivation in the Southern States is ruled out.

A call had been made for more research work to be undertaken with the animal-drawn implement and farm transport. Such work might improve the quality of the implement but the long-standing problems will still be there. Firstly, at this high rate of population increase, it will be a problem to supply the present farming population in the tse-tse-free areas, with draught animals as sources of farm power. Secondly, areas intended to use the animals have of long dry season and the peak of work normally comes at the end of the dry season when the cattle area in very poor conditions and the supply of human food and feeds for cattle is limited.

Therefore, it is evident that draught animals would not play much important role in the agricultural development in Nigeria even in the areas free of tst-tse fly.

Motorized Farm Power (Tractors)

About 50 years of development of farm tractors and implements have resulted in a range of sizes, types and design to meet most of the soil and climatic conditions encountered in the world's agriculture. Yet a serious deficiency remains in the selection and adaptation of agricultural machinery for a developing country like Nigeria. The tendency has been simply to transpose and apply a limited range

of equipment manufactured and designed for industrialised countries to all parts of the world. This has been done purely on commercial basis with little or no efforts to test and demonstrate agricultural machinery under local conditions.

Design and Selection Limitations

A critical look at world farm machinery reveals that there has not been much revolutionary changes in design. It is said that if manufacturers were to put major emphasis on the design of equipments to meet all different soil and climatic conditions in developing countries, there is little or no likelihood that major design changes would emerge. This is because farm machinery design has been an evolutionary process rather than revolutionary. It will, therefore, be unrealistic to expect the manufacturers to come up with completely new design for each soil or climatic condition in developing countries. It is equally unrealistic to ask the developing countries to embark on big research and design programs with expectation that they will come up with revolutionary new designs that will solve local problems.

One of the problems facing machinery users in developing countries is the unavailability of all configuration and accessories of the design of a particular implement. A good example is the moldboard plow. In many parts of the tropics, the moldboard plow has been known to be unsuitable for local soil conditions. But a critical survey shows only one or two particular body designs to have been available to the farmers, when, in fact, many manufacturers in the developed countries may have about 12 different moldboard configurations available for quite a number of varying soil conditions.

Also, there may be many accessories and attachments like coulter; jointers, etc. which in combination with the different share designs can perform a particular function under a particular set of conditions.

The above limitation may be caused by ignorant machinery dealers or suppliers imposing machines on ignorant users. This is very common in developing countries where people rush into sales and import representation business without having any knowledge of what are involved. It is not uncommon in Nigeria to find car and tractor sales agents who do not know the difference between a 65 h.p. and 80 h.p. tractor, as regards farm use. All they know is that one is bigger than the other and, therefore, costs more.

It is, therefore, important and necessary that the government scrutinizes the qualification of a sales representative in agricultural machinery before approving import licence.

Problems Facing Mechanization in Nigeria

Under-utilization of Tractors

A lot has been said about the type of machinery suitable for mechanization in a developing country, but much consideration is not given to how the machines are used. One of the problems facing mechanization in Nigeria is the under-utilization of the farm tractor. A survey shows that one of the causes of this under-utilization is due to unirrigated farming practice. The working season is short because of the distinct two seasons – rainy and dry.

Also, not all farm operations, at present, are performed with the tractor. In many cases, only the plowing, harrowing and planting are done with tractors, and the weeding and sometimes the harvesting are done by manual labour. There are some crops that don't lend themselves to mechanization, therefore, all the farm operations are done by manual labour. **Table 1** shows the use of tractors in one of the large-scale farming complexes in Nigeria.

Table 1 Comparison of Annual Tractor Hours/Tractor at 3 Different Farm Sites

Site	Total Area (Acres)	Hours/ Tractor	Hours/ Acre
1	550	337.5	4.5
II	220	229.4	11.5
III	95	167.3	12.3

Remark: Tractor hours inlcude hours used in plowing, harrowing, planting and transporting. The recommended economic annual use of tractor in tropical counties is 1000 hours.

The table gives the actual annual tractor hours/tractor as compared to the recommended rate. It is seen that under the Nigerian condition, tractors have been underused by as high as 80% in site III.

Spare Parts

The lack of spare parts in good time is a serious bane on the economical operation of farm machinery in developing countries. In a survey carried out in Nigeria,[2] it was found that many farm machinery dealers do not honour the obligatory after-sales services, which include supply of spare parts.

For example, in one cropping year, there were 304 break-downs in the agricultural machinery serviced by a dealer in one area of Nigeria. Out of these only 17 could be repaired and returned to the field and serviced within 6 weeks, 287 remained from 2-9 months in the workshop due to lack of spare parts **(Table 2)**.

Other Problems

It is not uncommon in some developing countries, for some people in offices, who are supposed to implement the mechnization projects of the countries to seize such opportunities to misuse the funds available. Most

Table 2 Performance of a Dealer with Regard to Supply of Farm Machinery Spare Parts in Nigeria

Time Taken to Supply the orders	No. of Orders so Completed
I. Immobilised*	
Under 6 weeks	17
6–8 "	49
8–12 "	31
12–16 "	14
16–20 "	19
20–24 "	10
24–28 "	1
28–32 "	3
32–36 "	2
37 + "	108
II. Stock Control**	
Under 6 weeks	None
6–8 "	11
8–12 "	5
12–16 "	4
16–20 "	4
20–24 "	4
24–28 "	2
28–32 "	2
32–36 "	1
36–40 "	1

* Immobilised: When the machinery is broken down the relevant orders for necessary spare parts are referred to as immobilised.
** Stock Control: Refers to spare parts required to be stored in anticipation of use as necessary at later dates. The orders are expected in 3 months.

of the time, these projects are given big names or slogans and a lot of money is pumped out of the government's coffers for them. Unfortunately, much of the money would not be used for the project but used for enriching personal pockets. Relatives and friends of the people in high offices, who are not knowledgeable in the area of farm equipment, are awarded contracts to supply farm machinery and equipment. The result is that a lot of low-quality and obsolete implements which are of no use are dumped in the project.

Another aspect of the agricultural mechanization projects in developing countries is funding. More often than not, mechanization projects in developing countries are usually funded by technical aid from developed countries. It is not uncommon for the donor countries to impose obsolete models and equipment that have gone out of production unto the developing countries. These equipment are given with little or no consideration of service facilities and local spare parts. The result in this may lead to many frustrations on the part of the user and thus lead to the condemnation of the donor, the products of the donor country and mechanization, in general. Therefore, in an attempt to promote mechanization, more damage to the image and development of mechanization is done.

Suggested Solutions

1. There is no clear-out definition of the stage of agricultural development now in Nigeria. Hence it is difficult to name any particular type of implement that is best suited.

It is, therefore, suggested that the three types of implements – viz. hand-operated, animal-drawn and motorised be used concurrently at places where they can be applied and by people who can afford them. But then, efforts should be made to develop hand-operated tools that are easy to operate and which do not require much stooping and bending. Some of these are already being developed at the International Institute of Tropical Agriculture (IITA) Ibadan, Nigeria and University of Ibadan, in the Department of Agricultural Engineering. Also, others are fabricating different appropriate technology tools.

2. Equipment should be purchased on proven performance and quality and not on price alone. This means that test results of the equipment under similar soil and climatic conditions should be known, before purchase. If not available, then arrangement should be made to test the equipment under local conditions. The universities are, therefore, called upon to embark on such projects. A testing station is already set up in Ahamadu Bello University, Zaria, Nigeria.

3. It is advisable to select the implement before the tractor to power it. It is the implement that performs the work to be accomplished.

4. Developing countries should not accept technical aid with the condition that equipment be supplied by the donor. The recipient country should have the free will to buy equipment from any source.

5. It is very ncesssary that implement selection should be done by an agricultural engineer who is knowledgeable in the design and use of the implement.

6. After-sales services should be made mandatory and a pre-condition for granting farm machinery dealers licence.

Conclusion

Selecting and adapting agricultural machinery to local conditions are not always easy. The type of machinery to be used depends on the economic standard of the local population and the ease to adapt such machinery to the condition. It is observed, though, that the use of hand tools that require much strain will not be found popular among the emerging young farmers.

For motorised tools, it is possible that there are available a wider variety of machines from manufacturers all over the world than the range of soils and climatic conditions. However, it is not practical for the consumer to have access to every machine from all sources. Therefore, it requires the co-operation of all parties involved – governments, farmers, agricultural engineers, technical assistants, manufacturers and their representatives – to overcome the problems involved in selecting and adapting farm machinery to any particular rural condition.

(Continued on page 51)

Kinematics of Single Rotary Blade in Rice Harvesting Machine

by
M. Majumder
Agricultural Engineering Department
Assam Agricultural University
Jorhat, India

R.K. Datta
Agric. Engineering Dept., I.I.T.
Kharagpur, India

Abstract

Rotary harvesters for harvesting of various crops are gradually drawing the attention of researchers and commercial manufactures of agricultural machinery. Of the many types of rotary harvesters, the one with a single blade moving in a horizontal plane has, by far, been widely accepted. The proper functioning of the cutting process of this blade is largely contributed by the blade design and its operational parameters. Kinematics of this rotary blade has, therefore, been presented to demonstrate the interrelationship of these parameters with the cutting efficiency.

Introduction

Most of the harvesting devices using rotary cutting element are still in the stage of research and development. This is especially true for cereal harvesters with a rotary blade.

Coats *et al* (3) classify these harvesters in the following three categories:

Type 1: Discs rotating in a plane horizontal to the ground surface.

Type 2: Discs rotating in a vertical plane parallel to the direction of motion.

Type 3: Simulation of reciprocating action using rotary motion.

Of all the above three types, the type-1 motion is rather common amongst the rotary harvesting machines. These machines can have either single disc or double discs. Some of the machines using type-1 motion are briefly described below.

Knapsack-type harvesting machines utilizing cutters rotating in a horizontal plane are commercially available in West Germany and Japan. These are mainly used for cutting grass, bush, hedge and the like. Andrews Stihl & Co. (1) a major power-tool manufacturer in West Germany manufactures and markets the shoulder type brush cutters. Both shoulder and knapsack versions of these equipments are manufactured in Japan (2). One such imported knapsack-type equipment has been tested for wheat and paddy at the Punjab Agricultural University, Ludhiana (8). Attempts have been also made to develop working type single row harvester for harvesting of cereals at N.I.A.E. England (6). Rotary cutters using type-1 motion, though rare, can also be seen in a commercially manufactured power tiller operated reaping machine (6) and in a tractor-operated disc mower (2).

Few researchers have gone a step forward and have tried to use two rotary blades instead of one as can be seen in all the machines described above. In these units the cutting unit consists of two circular blades rotating in opposite direction. They have been tried for crops like safflower (9), edible beans (4) tobacco, (4) and soybean (7).

In view of the gradual popularity of the single disc-type rotary blade, an attempt has been made to work out its kinematics in relation to the design parameters associated with it. An understanding of the kinematics will help in proper design of blade and selection of its operational parameter to derive optimum cutting efficiency.

Kinematics of a Single Rotary Blade Moving in a Horizontal Plane

Fig. 1 presents a rotary blade (on which two consecutive teeth have been shown) revolving in a horizontal plane. The disc rotates about the axis at O, and moves with a translatory motion along OX.

Assuming that during the cutting process the entire length aa_1 of the knife edge participates, then the path described by this edge is confined by the two adjacent parallel cycloids, the path described by the next consecutive knife edges is defined by another two

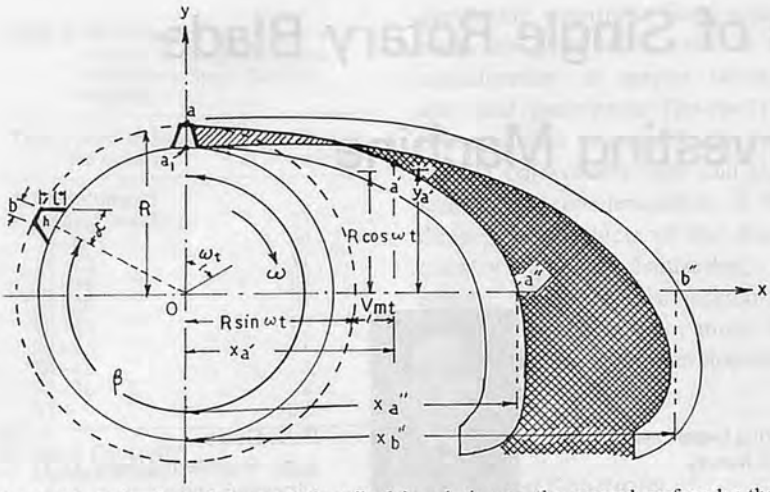

Fig. 1 Determination of the path described in relation to the ground surface by the teeth of a rotary blade moving in a horizontal plane. (After Kanafojski *et al* (64)).

parallel cycloids. The upper shaded area, enclosed by the curves of intersection of the two pairs of cycloids, determines the area over which the second consecutive tooth runs in idle motion since the plants grown over that area have already been cut off by the first tooth. But the cross-hatched area in between the cycloids containing growing plants will not be cut off at all. The point a occupies the position a' along the cycloid after a lapse of time t. At that instant the coordinate of the point a' is ($X_{a'}$, $Y_{a'}$). Accordingly the equations of the path of point are as follows:

$$X_a = V_m t + R \sin\omega t \quad \cdots 2.1$$

$$Y_a = R \cos\omega t \quad \cdots 2.2$$

where

V_m = Velocity of machine

R = Radius of blade

ω = Angular velocity of blade

The second tooth is separated from the first tooth by an angle β (counted along the positive direction of the rotation of the blade). The equation of motion of the point b on this second tooth can; therefore, be written as

$$X_b = V_m t + R \sin(\omega t + \beta) \cdot 2.3$$

$$Y_b = R \cos\omega t \quad \cdots 2.4$$

It can be seen from **Fig. 1** that the portion of the uncovered area shown by the cross-hatched line will decrease as X_b'' approaches the value X_a''. This implies an increases in cutting efficiency. The gap area will be nil when

$$X_b'' - X_a'' = h = l \cos\alpha$$

where

h = tooth depth

l = inclined length of the tooth

α = rake angle

The point a of the first tooth will meet the axis OX at $t = \pi\omega/2$. At this value of $t = \pi\omega/2$, X_a will be equal to X_a''. Substituting the value of $\omega t = \pi/2$ in Eqn. 2.1, we have,

$$X_a'' = \frac{V_m \pi}{2\omega} + R \sin\frac{\pi}{2}$$

$$= \frac{V_m \pi}{2\omega} + R \quad \cdots 2.6$$

The point b of the second consecutive tooth will meet the axis OX where

$$\omega t = 2\pi - \beta + \pi/2$$

or

$$\omega t = 5\pi/2 - \beta$$

At this value $\omega t = (\frac{5\pi}{2} - \beta)$, X_b will be equal to X_b''. Substituting this value of ωt in Eqn. 2.3, we have,

$$X_b'' = \frac{V_m}{\omega}(\frac{5\pi}{2} - \beta) + R \sin(\frac{5\pi}{2} - \beta + \beta)$$

$$= \frac{V_m}{2\omega}(\frac{5\pi}{2} - \beta) + R \quad \cdots 2.7$$

Substituting the value of X_a'' and X_b'' in Eqn. 2.5, we get,

$$\frac{V_m}{\omega}(\frac{5\pi}{2} - \beta + \frac{\pi}{2}) = h = l \cos\alpha$$

or

$$\frac{V_m}{\omega}(2\pi - \beta) = h = l \cos\alpha$$

or

$$\frac{V_m}{\omega} = \frac{h}{2\pi - \beta} = \frac{l \cos\alpha}{2\pi - \beta} \quad \cdots 2.8$$

The parameters ω, V_m and h can be expressed independently in terms of the other parameters from Eqn. 2.8. They are as follows:

$$\omega = \frac{V_m}{h}(2\pi - \beta)$$

$$= \frac{V_m}{l \cos\alpha}(2\pi - \beta) \quad \cdots 2.9$$

$$V_m = \frac{h\, 2\pi N}{(2\pi - \beta)} = \frac{h N}{(1 - \beta/2\pi)} \quad \cdots 2.10$$

(where N = blade r.p.m.)

and

$$h = \frac{V_m (2\pi - \beta)}{2\pi N} \quad \cdots 2.11$$

The observations against each of the expressions 2.9, 2.10 and 2.11 are given below:

Observations from Eqn. 2.9

1. A close tooth rotary blade requires less angular speed since when β increases, ω decreases.
2. The higher the machine forward speed V_m (for a constant blade profile), the higher is the angular speed requirement.
3. The less the tooth depth h, the higher is the angular speed requirement.

Observations from Eqn. 2.10

4. The desired forward speed can be calculated for a given number of disc revolutions with a selected blade when h and β are known.

Observations from Eqn. 2.11

5. The desired tooth depth h can be obtained for a certain ma-

chine forward speed and blade speed.

Again, considering that there are n number of teeth in the blade, the peripheral distance between the consecutive tooth is $2\pi R/n$. For a blade peripheral velocity of V_b, the time taken for two consecutive teeth to pass the axis is given by

$$t = \frac{2\pi R}{nV_b} \quad \cdots 2.12$$

The blade will advance a distance of $h(= l \cos \alpha)$ along the axis OX due to the translatory motion in time $t' = \frac{h}{V_m}$. In order to have at least one cut for this distance h along OX, provided the entire tooth depth is utilized for cutting, the time t' must be equal to t,

$$\frac{2\pi R}{nV_b} = \frac{h}{V_m} \quad \cdots 2.13$$

If more than one cut is desired, then we must have $t < t'$, or

$$\text{or } \frac{2\pi R}{nV_b} < \frac{h}{V_m} \quad \cdots 2.14$$

Combining the Eqns. 2.13 and 2.14, we have,

$$\frac{2\pi R}{nV_b} \leqslant \frac{h}{V_m}$$

$$\text{or } \frac{V_m}{V_b} \leqslant \frac{nh}{2\pi R} \quad \cdots 2.15$$

Thus the ratio V_m/V_b is a useful parameter for ascertaining whether proper cutting is achieved. This is dependent on the blade specification like ω, h and R. Thus for a certain blade specification there exists a minimum value of V_m/V_b below which the machine should not be operated.

REFERENCES

1. Andrews Stihl, 7050, Waiblingen, W. Germany (1979), personal communication.
2. Anonymous (1979). Japan agric. machinery and land internal combustion engines. Japan Exporters Association, Kikai-Sinko Bldg., 58, Shiba-Koen 2 Chom Minato-ku, Tokyo-105, Japan.
3. Coats, W.E. and Porterfield, J.G. (1975). A compound helical coulter-bar design and field testing. Trans. Am. Soc. Agric. Engrs, 18(6).
4. Hummel, J.W. and Winn, P.N. Jr. (1967). Measuring cutting forces of Maryland tobacco in relation to mechanical harvester designs, Trans. Am. Soc. Agric. Engrs, 10(1).
5. Kanafojski, C. and Karwowski T. (1976). Agricultural machines theory and construction, Vol. 2 (Translation) U.S. Dept. of Commerce. Nat. Tech. Information Service. Springfield, Virginia 22161.
6. Mathews, J. (1979). N.I.A.E., Silsoe, U. K. Personal Communication.
7. Shertz, C.E. (1970). Rotary cutters and cylindrical rollers for gathering function in harvest of soybeans. Am. Soc. Agric. Engrs, Pap. 70-628.
8. Singh, S. and Verma, S.R. (1978). Field test report on 'Beaver Knapsack Type Power Reaping Machine', P.A.U., Ludhiana.
9. Srivastava, N.C. and Dyck, F.B. (1978). Development of a single row safflower harvester. AMA 9(3).

(Continued from page 48)

Selecting and Adapting Farm Machinery to Rural ...

REFERENCES

1. Igbeka, J.C. 1972, Machinery Use in the Mid-West Food Production Company, 15pp Technical Report.
2. National Agricultural Development Committee, 1971, 8th Report of the Study-Croup on Mechanization of Agriculture, D Fed. Dept. of Agric., Lagos.
3. Stout, B.A., C.K. Kline, D.A.G, Green and R.L. Donahue, 1970, Agricultural Mechanization in Equatorial Africa, paper 70-113 presented at Annual Meeting of the A.S.A.E.

ERRATA

Vol. XIV, No. 2, Spring, 1983

Status of Selected Tillage Implements on Progressive Farms in Pakistan, p.62.

The portraits of second and third author should be placed in the reverse order.

Engineering Properties of Rice Husk Boards

by
B.D. Shukla
Post Doctoral Fellow
Agricultural Engineering Department
The International Rice Research Institute
P.O. Box 933, Manila, Philippines

T.P. Ojha
Director
Central Institute of Agricultural Engineering
G.T.B. Complex, T.T. Nagar
Bhopal 462003, india

C.P. Gupta
Professor
Agricultutal Engineering Department
Indian Institute of Technology
Kharagpur 721302, India

Abstract

Three successful processes for the production of rice husk boards have been developed and described in this paper. Four types of rice husk boards, namely; insulation board, binderless board, sodium silicate bonded board and resin bonded board, have been investigated. Different engineering properties of the rice husk boards have been tested and compared with the recommendations of Indian Standard Institution, British Standards, American Society of Testing Materials and other published literatures. A five-tonne per day capacity plant for the production of resin bonded rice husk board was also designed for India and the cost of production was estimated.

Introduction

India produces more than 80 million t of paddy (rough rice) annually. About one-fifth of paddy production is available in the form of husks. Thus, about 20 million t of husks are available in the country annually. At present, rice husk is used in very small quantity by the rice milling industries in India, as fuel for the generation of steam. The remaining part of the husk is either burnt to ashes or heaped by the side of rice mills to get decomposed by natural process. Hence the disposal of rice husk is a big problem for rice millers. Nevertheless, rice husk possesses all the characteristics required for the raw materials for manufacturing the boards except its very small size and irregular shape.

The studies made in the past by Lathrop (1952), Baixuli (1953), Staackman and Goodule (1970), and Chettenden (1971), have not given any concrete solution to the problem of how to bind the rice husks in the shape of board. Jain and Gupta (1964) and Vasishth (1971 and 1973) used phenol formaldehyde (PF) resin for binding the husk particles in board form. Similar type of work was also carried out by the Regional Research Laboratory (RRL), Jorhat, in India (RRL Jorhat 1972) and was reported that the boards from rice husks could be manufactured by the application of PF resin. Rice husk and saw dust were used for the production of particle boards at the Forest Products Research Institute, University of Philippines, Los Baños (Lantin 1982).

The binding of husks in the proper shape of boards was a big problem in the above mentioned approaches. In view of the demand for building boards and short supply of raw materials for its manufacture; this research problem was undertaken at the Indian Institute of Technology, Kharagpur, India, with the following objectives: (1) To develop the techniques of binding the rice husk in the form of boards; (2) To study the various engineering properties of the boards developed by the new techniques; and (3) To study the economics of rice husk boards production in India.

Materials and Methods

Rice Husks

No specific variety of paddy was selected for this study. The rice husks, which were obtained after milling the different varieties of paddy, were collected from the local rice mills of West Bengal State in India. The wet husks were dried in the sun up to 7-8% (DB) moisture content and then passed through screens to remove the dusts, iron particles and rocky grains. The cleaned husks were preserved for the experiment.

Phenol Formaldehyde (PF) Resin

The composition of different constituents for the preparation of PF resin was as follows:

Phenol	94.0 g
NaOH	14.5 g
Formation (37%)	132.0 g
Water	14.5 g

The resin was prepared following the described procedures by Shukla *et al* 1977.

Paraffin Wax Emulsion

This paraffin was used as water resistant sizing agent in the preparation of board and was prepared as follows:

Paraffin wax	30 g
Oleic acid	10 c
Casein (soluble in alkali)	1.5 cc
Ammonia	0.5 cc
Trimethanolamine	5 cc

The mixture was dissolved in about 100 cc of distilled water at 60-70°C and thus a 30% solid contained paraffin wax emulsion was prepared. (For detail see reference Shukla 1976 and Shukla *et al* 1977).

Preparation of Rice Husk Boards

Grinding of husks – Pre-sieved, cleaned and dried husks were passed through a mechanical grinder for size reduction and smoothness of surface of the particles. The husk particles in the range of 7-14 BS mesh size were found suitable for making the board by this process. About 80-90% of the original weight of the husks, was obtained after grinding and screening.

Mixing with additives – The sized particles of rice husks were mixed by hand with PF resin and wax emulsion in a tray. The mixing was done carefully so that the surface of all husk particles were coated with additive uniformly.

Drying – The additives mixed rice husks were dried in the sun up to 7-8% (db) moisture content.

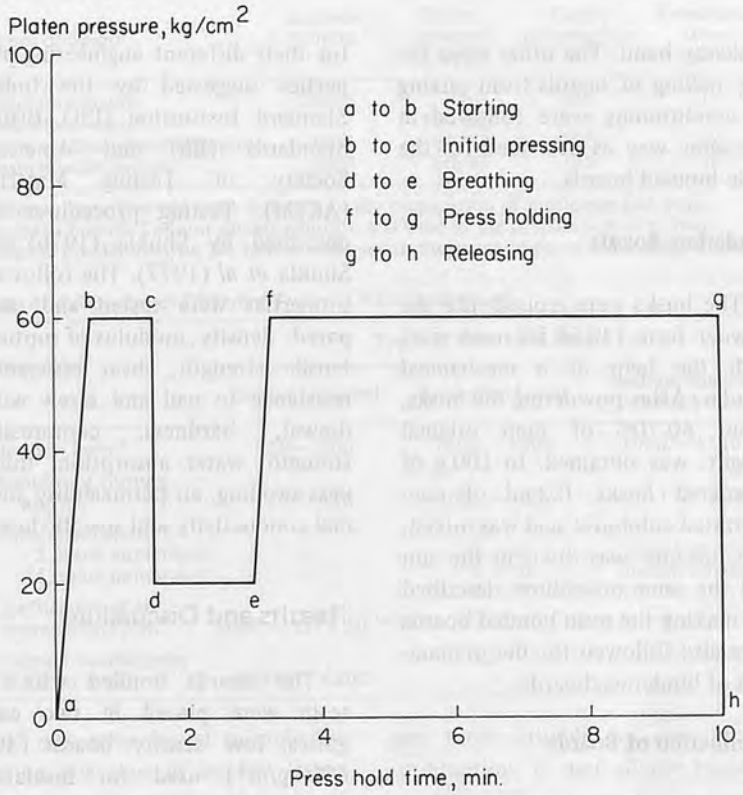

Fig. 1 Three stage pressing cycle at platen temperature of 180°C.

Table 1 Operating Conditions of the Press

Types of Boards	Operating Conditions		
	Platen temperature °C	Press hold time min	Platen pressure kgf/cm²
Resign bonded insulation boards	180	10	1, 2.5, and 4
Binderless boards	160 – 165	15 – 12	80, 100, and 150
Sodium silicate bonded boards	180	10	40, 60, and 70
Resin bonded boards	160, 180, and 200	12, 10, and 7	20, 30, 40, 60, 80 and 100

Mat formation – A mild steel mould of inner dimensions, 13 x 13 x 8 cm high and of thickness 1 cm, was used for the mat formation. About 150-200 g of additive coated husks after drying were taken to form the mat into the female mould. After spreading the husks uniformly the male mould was placed on the upper surface of mat into the female mould.

Pressing – A day-light hydraulic press was used for pressing the mat into the mould. The press was already heated to a required temperature. Three stages of pressing cycle time, as shown in **Fig. 1** and **Table 1**, was followed.

Conditioning of the boards – The pressed board was taken out from the mould and was then allowed to cool at room temperature. No surface smoothing was required as the board itself obtained a very smooth surface.

Sodium Silicate Bonded Boards

This process was also similar in nature as the resin bonded process except that there was a change in additives. The sodium silicate solution was mixed with the sized rice

husks by hand. The other steps for the making of boards from mixing to conditioning were followed in the same way as described for the resin bonded boards.

Binderless Boards

The husks were ground into the powder form (40-60 BS mesh size) with the help of a mechanical grinder. After powdering the husks, about 60-70% of their original weight, was obtained. In 100 g of powdered husks, 0.2 ml of concentrated sulphuric acid was mixed. The mixture was dried in the sun and the same procedures described for making the resin bonded boards were also followed for the preparation of binderless boards.

Lamination of Boards

The boards bonded with sodium silicate solution and binderless process were laminated with ply-wood on both surfaces for strength and smoothness. About 0.05 mℓ/cm^2 PF resin (50% solid content) were applied on one surface of the ply-wood pieces which were taken equivalent to the size of the board. The resin coated plywood pieces were dried in a hot air oven at 150°C for 15 min. The rice husk board was placed in between two pieces of ply-wood and was pressed by the hydraulic press at 110°C platen temperature, and 5-10 kgf/cm^2 platen pressure for 5-8 min. It was taken out from the press and left at room temperature for conditioning.

Water Resistance Boards

Paraffin wax emulsion was added along with PF resin or sodium silicate for making the water resistance boards.

Testing of the Boards

The rice husk boards were tested for their different engineering properties suggested by the Indian Standard Institution (ISI), British Standards (BS) and American Society of Testing Materials (ASTM). Testing procedures are described by Shukla (1976) and Shukla *et al* (1977). The following properties were tested and compared: density, modulus of rupture, tensile strength, shear resistance, resistance to nail and screw withdrawal, hardness, compressive strength, water absorption, thickness swelling, air permeability, thermal conductivity and specific heat.

Results and Discussions

The boards bonded with PF resin were placed in two categories; low density boards (400-600 kg/m^3) used for insulation purposes and high density (above 600 kg/m^3) boards similar to particle boards and hardboards made of materials like woods, fibres, etc. The term 'insulation board' has been used throughout the text. The term 'board' will signify the meaning of resin bonded, sodium silicate bonded and binderless boards.

Trial and error method was used to establish the parameters for manufacturing the rice husk boards which could satisfy the requirements of Indian and British standards, and in some cases, the standards established by the American Society of Testing Materials.

Insulation Boards

With several trials, the platen pressure, platen temperature and press hold time for the manufacturing of insulation boards of rice husk were established. Low range platen pressure was necessary to get low density board. The Indian Standards Institution (IS: 1658-1966, IS: 3478-1966, IS: 3087-1965 and IS: 3129-1965) recommend that the density of insulation board should not go beyond 400 kg/m^3 and that the requirement was fulfilled on the application of 2.5 kgf/cm^2 platen pressure to press the board. It was very difficult to bind the husk on such a low pressure. Therefore, the resin requirement was more to achieve the required bonding strength. After several trials it was found that 20% PF resin (by weight of husk) was sufficient to fulfill the strength requirement of the insulation boards. According to Indian Standard Institution (IS: 3129-1965 and IS: 3348-1965), the modulus of rupture (MOR) of insulation board should not be less than 15 kgf/cm^2 and the amount of glue for binding the fibres, should not exceed 20%. This requirement was met, as at 2.5 kgf/cm^2 platen pressure and 20% PF resin content, the MOR of the insulation board was obtained as 18.21 kgf/cm^2.

Press hold time is a function of platen temperature. The temperature should cure the adhesive to provide the better bonds in between the particles. The combination of press hold time and platen temperature was chosen on the basis of work done by RRL Jorhat (1972) and Vasishth (1971). **Table 2** presents the different combinations of press hold time and platen temperature which were used during the experiments. For insulation board 180°C and 10 minutes platen temperature and press hold time, respectively, were found quite suitable. Thermal conductivity and air permeability of insulation boards were also determined. According to ISI, at 400 kg/m^3 density, the thermal conductivity of such type

Table 2 Relation between Press Hold Time and Platen Temperature

Press hold time min	Platen temperature °C
7	200
10	180
12	160

boards should not be more than 0.07 K cal/hr-m-°C in the case of particle boards used for insulation purposes (IS: 3129-1965) and 0.056 K cal/hr-m-°C in the case of fibre insulation boards (IS: 3348-1965). The rice husk insulation boards have the value of thermal conductivity of 0.0586 K cal/hr-m-°C which is safer and within the limit of ISI. None of these standards have fixed any value of air-permeability for insulation boards. The results are presented in **Table 4**.

Table 3 Ideal Parameters for the Preparation of Rice Husk Boards

Types of board	Adhesive content[1] %	Platen pressure kgf/cm²	Platen temperature °C	Press hold time min
Insulation boards	20.00	2.50	180	10
Binderless boards	–	100.00	165	12
Sodium silicate bonded boards	60.00	60.00	180	10
Resin bonded boards	8.00	60.00	180	10

[1]) Phenol formaldehyde resin was used in the preparation of insulation and resin bonded boards. Sodium silicate solution was used in the preparation of sodium silicate bonded boards. No binder was used in the preparation of binderless boards.

Table 4 Properties of Different Types of Rice Husk Board

Properties	Types of Rice Husk Board		
	Insulation board	Binderless board	Sodium silicate bonded board
Density, kg/m³	250 – 300	1300 – 1600	1000 – 1120
Modulus of rupture, kgf/cm²	13 – 18	182 – 207	213 – 312
Water absorption, %			
2 hours immersion	–	2 – 3	loosen bonds
24 hours immersion	–	8 – 10	loosen bonds
Coefficients of air permeability, cm²	$(680 - 33) \times 10^{-10}$	–	–
Thermal conductivity K cal/hr-m-°C	0.033 – 0.083	–	–

Binderless Boards

The pressure required to bind the particles of husk was very high as the powdered husks (40-60 BS mesh size) were used in its preparation. Therefore, on the application of higher pressures, the mat was compressed resulting in reduced air spaces and the thickness of the boards. Thus, a very high density boards were obtained. As it was not possible to bind the husks at pressure lower than 70 kgf/cm², the higher pressure in the range of 80-150 kgf/cm² was applied. Ideal parameters for the preparation of binderless boards are given in **Table 3**.

The process with which the binderless boards were made is called 'thermo-mechanical' process (RRL Jorhat 1972), where the combined effect of heat and compression is utilized to bind the husk in a board form. Though the density of the board was higher than the requirement of Indian Standards the MOR obtained was under the safe limit. BS and ASTM even recommend the boards of high density (more than 1 200 kg/m³) also and binderless boards satisfied their specifications.

The press hold time required in the case of binderless boards was greater at lower temperature. About 160-165°C platen temperature and press hold time of about 12-15 min were found suitable for making this type of boards. Other properties like water absorption, thickness swelling, etc. all were under the limit of ISI. The results are presented in **Table 4**. Both surfaces of the board were laminated for strength and smoothness.

Sodium Silicate Bonded Boards

After several trials it was established that with 60% sodium silicate (based on dry weight of husks); 60 kgf/cm² platen pressure, 180°C platen temperature and 10 min press hold time, a board could be prepared which could meet the requirements of ISI (**Table 3**). This board absorbs more water, therefore, it is not recommended for exterior use. It was also laminated with plywood for its decoration and protection. The test results are given in **Table 4**.

Resin Bonded Boards

While establishing the parameters for the manufacture of this type of board, several factors were evaluated and experimental trials were made. This type of boards are most suitable for commercial production. It met all the requirements of ISI.

According to the ISI (IS: 3087-1965) the density of such type board should not exceed the limit of 1 200 kg/m³. It was observed that the density of board was higher at the application of higher platen pressure and vice-versa (Shukla 1976). At a higher pressure, the mat was further pressed and hence, the thickness of the board was reduced which reduced the total volume of the board. There was no change in the mass and thus the density was higher at higher pressure.

The density was also affected by the amount of resin applied for binding the boards. At a particular platen pressure, the density of the board was increased by increasing the amount of resin content. The increase in density was due to the addition of adhesive which increased the total mass of boards. For 60 kgf/cm² platen pressure, the densities of resin bonded board at 8 and 10% resin content, were 996.80 and 1 132.80 kg/m³, respectively. Even at 12% resin content the density did not exceed

the limit of 1 200 kg/m^3 and the quality of the boards was also better. In order to minimize the amount of resin content and to achieve the standards specified by ISI, BS and ASTM, the boards with 8% resin content at 60 kgf/cm^2 platen pressure, were found quite suitable and were chosen for further evaluation.

In another study (Shukla 1976) it was also observed that there was very little effect of variation of platen temperature on the MOR. Therefore, 180°C platen temperature and 10 min corresponding time (Table 2) was found suitable for such type of boards. The addition of wax emulsion in the resin bonded board decreased the MOR. The wax content above two percent (based on dry weight of husk) decreased the MOR below the required level of ISI and BS (Shukla 1976). This reduction of MOR was probably due to the influence of wax on the glue bond formation.

Based on several experimental results, the ideal conditions which were directly related to the MOR, were established for the manufacture of this kind of rice husk boards. These parameters are presented in Fig. 2.

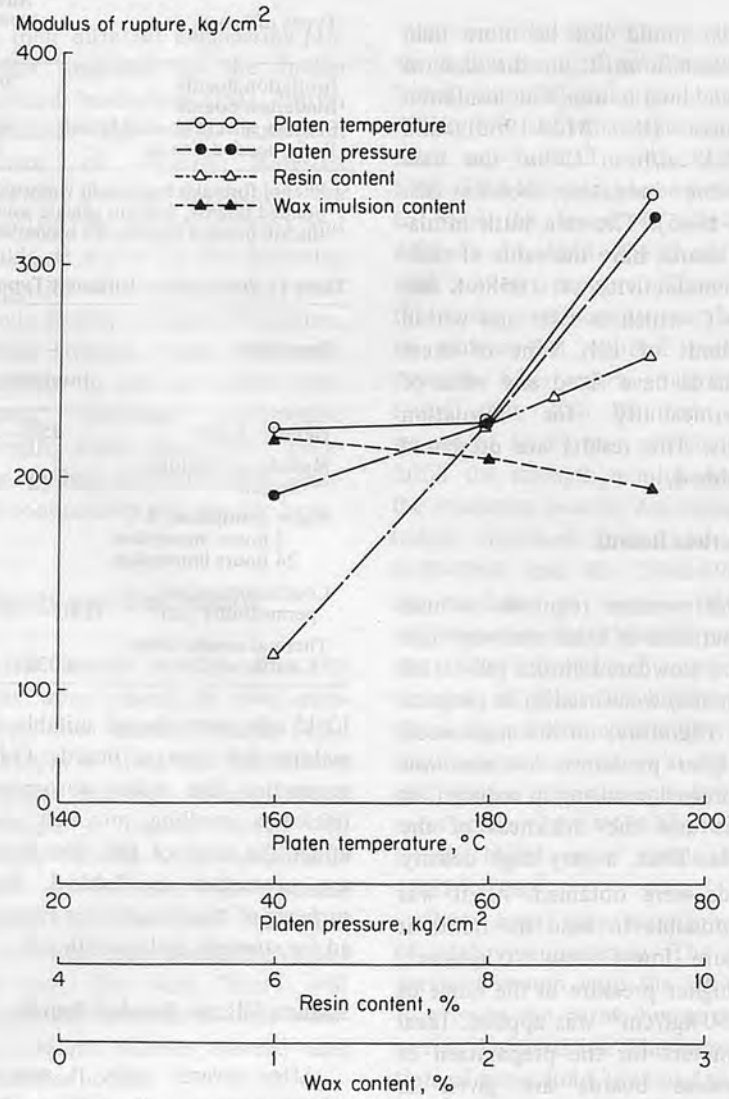

Fig. 2 Relationship of the variables with modulus of rupture for making ideal rice husk boards.

Engineering Properties of Resin Bonded Boards

The various engineering properties of resin bonded boards prepared under ideal conditions were determined and studied. The properties are summarized in Table 5.

MOR and tensile strength – The modulus of rupture was determined as 302.68 kgf/cm^2 at the board density of 1 200 kg/m^3 which meet the requirement of ISI.

The tensile strength test was carried out in two directions, i.e., parallel and perpendicular to the plane surface of the board. The tensile strength perpendicular to the plane surface is also known as internal bond (IB) strength of the board.

In the density range of 600-1 400 kg/m^3, the tensile strength parallel to plane surface of the boards were obtained in the range of 122.18-236.82 kgf/cm^2, which meet the requirements of ISI and BS. These standards (IS: 3087-1965, IS: 3129-1965 and BS: 2604-1963) recommend this strength as 200 kgf/cm^2 for the density range of 900-1 200 kg/m^3 for such types of boards. Similarly the IB strength was obtained as 3.04-11.68 kgf/cm^2 for density of boards 600-1 200 kg/m^3, which are in accordance with the requirements of BS (ISI has not fixed any limit for this test).

Shear resistance (SR) – Neither ISI nor BS has fixed any limit to shear resistance for such type of boards. McNat (1973) tested a few commercial boards and reported the values of SR in the range of approximately 10-34 kgf/cm^2. In the case of resin bonded rice husks board, the value of SR were obtained in the range of 5.15-52.35 kgf/cm^2 which seemed to be reasonable, in comparison to the results obtained by McNat (1973).

Nail and screw holding capacity – The pulling loads for nail and screw were obtained in the range of 11.85-49.45 kgf and 18.09-

Table 5 Properties of Resin Bonded Boards

Properties	Values
Density, kg/m³	900 – 1200
Modulus of rupture, kgf/cm²	194 – 303
Tensile strength parallel to surface, kgf/cm²	165 – 208
Tensile strength perpendicular to surface, or internal bond (IB) strength, kgf/cm²	7 – 12
Shear resistance, kgf/cm²	23 – 41
Resistance to screw withdrawal, kgf	47 – 76
Resistance to nail withdrawal, kgf	24 – 42
Hardness, kgf/cm	944 – 1892
Compression at room temperature of 30° ± 1°C	
a. compressibility, %	3 – 1
b. retention of compression, %	7 – 2
Compression at elevated temperature of 95° ± 2°C	
a. compressiblity, %	6 – 1
b. retention of compression, %	17 – 8
Water absorption (without wax)	
a. 2 hrs immersion, % db	25 – 13
b. 24 hrs immersion, % db	43 – 22
Water absorption (waxed)	
a. 2 hrs immersion, % db	12 – 6
b. 24 hrs immersion, % db	20 – 9
Thickness of swelling (without wax)	
a. 2 hrs immersion, %	12 – 5
b. 24 hrs immersion, %	26 – 15
Thickness of swelling (waxed)	
a. 2 hrs immersion, %	6 – 4
b. 24 hrs immersion, %	10 – 4
Air permeability coefficients, cm²	$3 \times 10^{-10} - 0.36 \times 10^{-10}$
Thermal conductivity, K cal/hr-m-°C	0.1203 – 0.1573
Specific heat in the temperature range of 50 – 100°C	
a. At board density 613.25 kg/m³	0.3294 – 0.3328
b. At board density 895.60 kg/cm²	0.4409 – 0.4482
c. At board density 1250.72 kg/m³	0.5603 – 0.5721

94.89 kgf, respectively, at the density range of 600-1 300 kg/m³. The nail produces less resistance with fibres of boards compared to screw because of its smooth surface. At 1 200 kg/m³ density, the pulling loads of nail and screw were obtained as 40.05 kgf and 75.69 kgf which meet the BS recommendations.

Hardness – The surface hardness was determined as 505.34-1 382.54 kgf/cm² for the board density of 600-1 200 kg/m³. This result showed that the prepared boards were hard enough to bear the surface loads. Neither ISI nor BS has suggested any limit for this property, therefore, exact comparison was not possible.

Compression test – The aim of this test was to evaluate the decrease in thickness of the board when a uniformly distributed force of 15 kgf/cm² was applied perpendicular to its surface. The tests were performed at room temperature of 30±1°C and elevated temperature of 95±2°C (IS: 2380-1963). The average test values are given in **Table 5**. It was observed from the result that the decrease in thickness of the board on the application of 15 kgf/cm² pressure was less as the boards were prepared at 60 kgf/cm² platen pressure and already pressed.

Water absorption and thickness swelling – In many applications, the strength properties of the panel products are less important than their dimensional change in response to changing moisture content level. Due to absorption of moisture the glue bonding becomes free and the bonds start swelling. The absorption of water and thickness of swelling were recorded by immersing the test specimens in water for 2 and 24 h. The results are reported in **Table 5** which meet the ISI requirements (IS: 1658-1966 and IS: 3478-1966). According to ISI, the water absorption should not go beyond the range of 15-20% in 24 h immersion for such types of boards of 1 200 kg/m³ density.

Table 6 Air Permeability Coefficient and Thermal Conductivity of Resin Bonded Boards

Density kg/m³	Air permeability x 10^{-10} cm²	Thermal conductivity K cal/hr-m°C
1	2	3
200	686.600	0.0339
300	332.300	0.0463
400	151.300	0.0586
500	71.050	0.0709
600	33.360	0.0833
700	15.660	0.0956
800	7.353	0.1080
900	3.452	0.1203
1 000	1.620	0.1327
1 100	0.761	0.1450
1 200	0.357	0.1573
1 300	0.167	0.1697
1 400	0.078	0.1820

Air permeability and thermal conductivity – The permeability to air of resin bonded boards was determined following Muskat's (1946) principle for measuring the permeability of a porous medium. The combined results of thermal conductivity and air permeability are given in **Table 6**. It was observed that the density was the main factor which affected the permeability and thermal conductivity of the boards. For this types of boards, neither ISI nor BS specifies any limit of thermal conductivity and air permeability, but observed results were quite satisfactory.

Specific heat – Density of the board was observed as a major factor affecting the specific heat which was determined at three densities ranging from 600-1 300 kg/m³ at three selected temperatures, i.e., 50°, 80° and 100°C. The results are summarized in **Table 5**. The specific heat values for such kinds of boards were observed in the higher range, probably

due to the addition of resin, which also confirms the view given by Marks (1941), Mechanical Engineer's Handbook.

Economics of Production of Rice Husk Boards on Commercial Scale

The cost estimation of a proposed 5 T/day capacity plant for manufacturing the resin bonded rice husk boards on commercial scale in India was also carried out (see reference Shukla 1976 for details). All the proposed equipments and machineries are indigenously available. Therefore, no foreign exchange is involved in the proposed plant.

The total capital investment in the proposed plant would be approximately US$300,000, at the production rate of 5 T/day od resin bonded boards. On the basis of no profit and no loss, the price of rice husk boards with 8% PF resin, was obtained as about US$2/m^2. The market price of such types of boards is higher than US$6/m^2 in India.

Conclusions

Among the three processes for manufacturing rice husks boards, the process using PF resin for binding the boards was found most suitable and satisfied all the requirements of the ISI. The insulation and sodium silicate bonded boards could be produced by the same plant designed for the production of resin bonded boards.

If the sodium silicate content of the rice husk could be used as binder, the production cost for such type of board could be minimized as compared to resin bonded boards. The insulation boards also meet the requirements of ISI and could be produced commercially.

If the density, which does not satisfy the ISI requirements, is ignored, the binderless boards could be produced with less production cost and would be more profitable than the resin and sodium silicate bended boards. This board met all the requirements of the ISI except the density test.

Recommendations

1. Investigation should be carried out to minimize the production cost of PF resin.
2. Investigation should be extended on the use of sodium silicate available in the rice husk for binding the boards.
3. A pilot-plant study should be made to evaluate the feasibility and economics of commercial plant for the production of rice husk boards.

REFERENCES

1. American Society of Testing Materials (ASTM). 1972 Standard No. D3044.
2. Baixuli, S.F. 1953. Molded panels from rice hulls. Spanish Patent 206.621. Chem. Abs. 48. 12388.
3. British Standard. 1963. Standard No. BS: 2604.
4. British Standard. 1969. Standard No. BS: 1811.
5. Chettenden, A.E. 1971. Paddy husk utilization. UNIDO. 1D/WC. 89/14. P4.
6. Indian Standard Institution: Standard No. 2380-1963, UDC 674.81: 691.115: 413: 620.1; No. 3087-1965, UDC 699.86; No. 3129-1965, UDC 674.815; No. 3348-1965, UDC 691.147; No. 3478-1966, UDC 674.815; No. 1658-1966, UDC 676.7.
7. Jain, N.C. and R.C. Gupta. 1964. Building boards from paddy husk. Press Media 117. Ightham. Kent, U.K.
8. Lathrop, E.C. 1952. Industrial utilization of rice hulls. Rice J. Amm. Issue P13.
9. Marks, L.S. 1941. Mechanical Engineer's Handbook. McGraw Hill Book Co.
10. McNat, J.D. 1973. Basic engineering properties of particle boards. USDA Forest Service Research Paper FPL206.
11. Muskat, M. 1946. The flow of homogeneous fluid through porous media. 2nd Ed. McGraw Hill Book Co., Inc.
12. Lantin, R.M. 1982. Dean, Institute of Agric. Eng. and Tech., University of Philippines, Los Baños, Laguna, Personal information obtained.
13. RRL Jorhat. 1972. Hard and particle boards from agro-industrial waste materials like rice husks, etc. with and without binder. Pub. Regional Research Laboratory (RRL), Jorhat, India.
14. Shukla, B.D. 1976. Processes for developing rice husk boards and determination of their engineering properties. Ph.D. Thesis. Indian Institute of Technology, Kharagpur, India.
15. Shukla, B.D., T.P. Ojha and C.P. Gupta. 1976. Measurement of thermal conductivity and air permeability of rice husk board. Souvenir ISAE XIV: AE. APE: 3.
16. Shukla, B.D., T.P. Ojha and C.P. Gupta. 1977. Study on manufacture of particle board from rice husk, XV Conv. ISAE. Pune, India.
17. Staakman, M. and T.C. Goodale. 1970. Rice hull utilization. Final Report URS Research Co. California. Contact No. 12-4-100 9571(74).
18. Vasishth, R.C. 1971. Water resistance composite board from rice husk. Int. Seminar. UNIDO, Madras, India.
19. Vasishth, R.C. 1973. Manufacture of Composite board from rice husks using a batchwise labour oriented plant. Cor-Tech Research Ltd. 430 Vanguard Rd., Richmand, Canada. ■■

INQUIRY and REQUEST to AMA

Please let us know your need. We shall promptly reply them. Inquire on any catalog listed in the advertisement in this issue. We shall try our best to serve you. We welcome articles of interest to agricultural mechanization.

Fill in the reverse side of this card and send us by sealed letter.

FARM MACHINERY INDUSTRIAL RESEARCH CORP.

7–2 Kanda Nishikicho Chiyoda–ku Tokyo–Japan 101

ADVERTISED PRODUCTS INQUIRY

Product	Advertiser	Vol., No., Page

EDITORIAL REQUEST TO AMA

Your Name :

Address :

Occupation :

SUBSCRIPTION/ORDER FORM

AGRICULTURAL MECHANIZATION IN ASIA, AFRICA AND LATIN AMERICA (AMA)

Issued Quarterly

Subscription Rate (includes surface mail postage)

Annual (4 issues) ----------¥.6,000
Single copy ----------¥.1,700

Back Issues (1971−75, ¥.2,000 per copy)
(1976−77, ¥.1,200 per copy)
(1978−80, ¥.1,500 per copy)

☐Spring, 1971	☐Vol.7 No.2, Spring, 1976	☐Vol.9 No.4, Autumn, 1978
☐Vol.2 Autumn, 1971	☐Vol.7 No.3, Summer, 1976	☐Vol.10 No.1, Winter, 1979
☐Vol.3 No.1, 1972	☐Vol.7 No.4, Autumn, 1976	☐Vol.10 No.2, Spring, 1979
☐Vol.3 No.2, Summer, 1972	☐Vol.8 No.1, Winter, 1977	☐Vol.10 No.3, Summer, 1979
☐Vol.4 No.1, Spring, 1973	☐Vol.8 No.2, Spring, 1977	☐Vol.10 No.4, Autumn, 1979
☐Vol.4 No.2, Autumn, 1973	☐Vol.8 No.3, Summer, 1977	☐Vol.11 No.1, Winter, 1980
☐Vol.5 No.1, Summer, 1974	☐Vol.8 No.4, Autumn, 1977	☐Vol.11 No.2, Spring, 1980
☐Vol.6 No.1, Spring, 1975	☐Vol.9 No.1, Winter, 1978	☐Vol.11 No.3, Summer, 1980
☐Vol.6 No.2, Autumn, 1975	☐Vol.9 No.2, Spring, 1978	☐Vol.11 No.4, Autumn, 1980
☐Vol.7 No.1, Winter, 1976	☐Vol.9 No.3, Summer, 1978	

☐ **Abstract and Index, 1971-80 (Special Issue, 1983)**

(Check issues and number of copies you wish to order)

Back Issues from 1981, ¥.1,700 per copy
Abstract and Index, Special Issue, 1983, ¥2,000 per copy.

Vol._____No._____,_____19_____,_____copy/copies

(check one)

☐ Please invoice me/us

☐ I/We enclose remittance for ¥_____

****

Name: _____

Firm: _____

Position: _____

Address: _____

(block letters)

FARM MACHINERY INDUSTRIAL RESEARCH CORP.

7, 2-chome, Kanda Nishikicho, Chiyoda-ku,
Tokyo 101 Japan
Tel. (03)−291−3671~4, 5718

STAMP

FARM MACHINERY INDUSTRIAL RESEARCH CORP.

7, 2-CHOME, KANDA NISHIKICHO, CHIYODA-KU
TOKYO, 101 JAPAN

1st FOLD HERE

2nd FOLD HERE

Effect of Vane Inclination on Performance of Radial Vane Centrifugal Pump

by
Md. Quamrul Islam
Assistant Professor
Department of Mechanical Engineering
Bangladesh University of Engineering and Technology
Dacca, Bangladesh

Obaidul Islam
Professor
Department of Mechanical Engineering
Bangladesh University of Engineering and Technology
Dacca, Bangladesh

Abstract

Reported here is an experimental investigation of the performance of a centrifugal pump with radial inclined vane impellers. It is found that the inclined vane impeller was better than the conventional straight vane as regards total head and efficiency.

Introduction

Shallow tubewells play a very important role in the irrigation system of Bangladesh. The definition of a shallow tubewell varies from organisation to organisation and depends on pipe size, depth and method of construction (1). The pump commonly used for shallow tubewells in Bangladesh lifts water by suction to the ground surface. The suction pump has inherent lift limitations and hence capacity limitations. The capacity varies between 1/2 to 3/4 cusec (14.16 to 21.24 l/sec) with 3 inch (76.2 mm) and 4 inch (101.6 mm) diameter pumps, respectively. The pumps are of radial flow centrifugal type. Shallow tubewells have failed barely in places because of the limitations of the pump performance. So an attempt is made here to improve the pump performance by changing the vane inclination of a radial flow centrifugal pump with the hope that even a slight improvement may avoid the failure of a shallow tubewell.

The vanes of a radial flow centrifugal pump impeller are usually set at right angles to the two parallel shrouds. This type of vane arrangement will be called straight vane (angle of inclination 90°). When the vanes are set in an inclined manner between the two parallel shrouds, it will be called inclined vane. An earlier work by the authors (2) on a radial centrifugal fan prompted the present work. No report on other works on inclined vane are available. In this work, an attempt is made to find the effect of inclined vanes on the performance of a radial flow centrifugal pump which is commonly used for shallow tubewell irrigation in Bangaldesh.

Experimental Setup and Procedure

Four radial vane impellers with angle of inclinations of 90°, 70°, 60°, and 50° were used in the investigation. As it is the aim of the experiment to find the effect only of vane inclination on the performance of the pump, a commercially available Ebara pump (No. P4002718, Type 805 EE, 3″ x 3″) was chosen. Only its impeller was replaced by the inclined vane impellers in turn keeping intact all other parts. The impellers were cast, machined and balanced to fit in the pump volute. All the dimensions of the impeller and of vanes were exactly identical with the Ebara pump impeller except the vane inclination.

The common procedures for testing a centrifugal pump (3) were followed. For each impeller, measurement of head, discharge and efficiency were made varying the flow rate by a gate valve placed in the delivery side. The pump was driven by a calibrated motor and coupling was through a vee-belt pulley. The pump speed was close to 2 000 rpm. All the results have been converted for 2 000 rpm using similar relations.

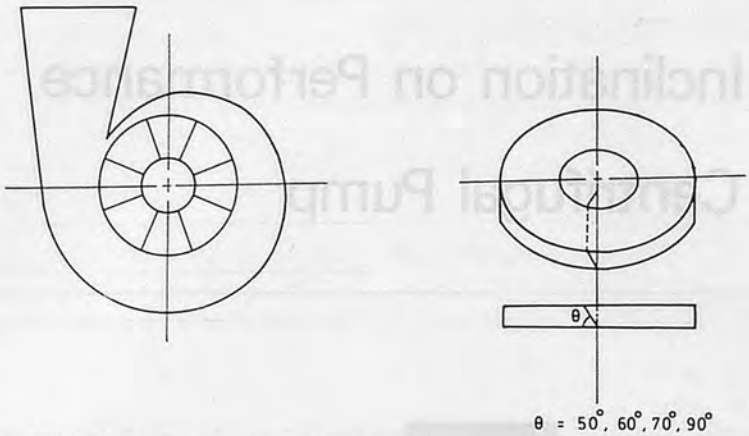

Fig. 1 Radial impeller showing vane inclination.

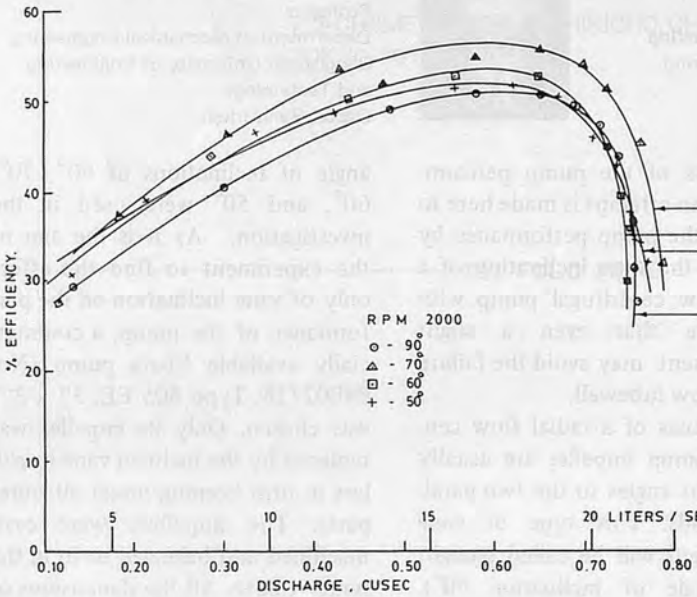

Fig. 2 Effect of vane inclination on the efficiency and discharge.

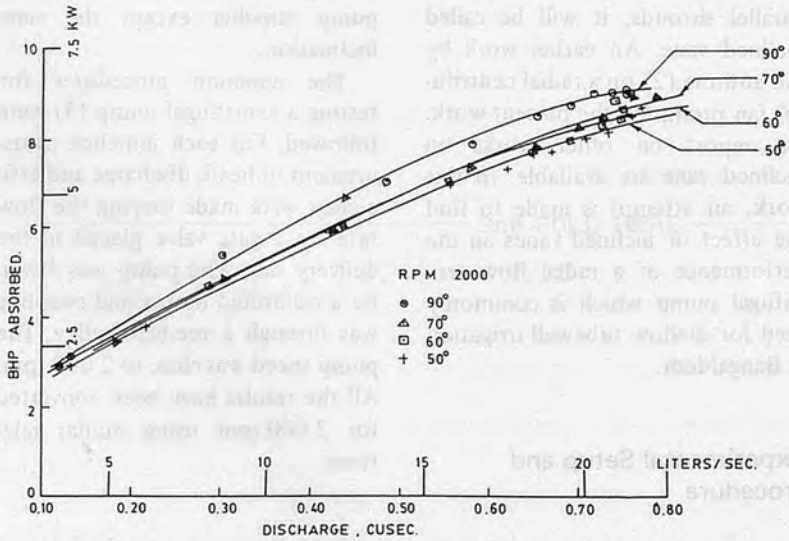

Fig. 3 Effect of vane inclination on the BHP and discharge.

Results and Discussion

The variation of efficiency with flow rate for different vane inclinations are shown in **Fig. 2**. The results can be compared with those of straight vane impellers. It is found that efficiency tends to increase of angle of vane inclination. The higher the angle of inclination, the closer it is to the straight vane type. An inclination of more than 70° will approach towards straight vane. In **Fig. 3** it is evident that the power absorbed is higher for the 90° inclined vane.

Fig. 4 is a cross plot of efficiency for different inclinations at three flow rates. Efficiency increases with angle of inclination up to about 70° and then decreases to 90° inclination. It is quite obvious from **Figs. 2, 3, 4** and **5** that the vane inclination of 70° is the best amongst the other inclinations of 50°, 60° and 90°. So it can be concluded that a radial inclined vane impeller has better efficiency and head than the conventional straight radial vane.

Further work can be done with radial vanes having angle of inclination less than 50°. Suction characteristics may also be studied by placing a control valve in the suction side. The study of the effect of the inclination on backward and forward curved vanes will be also of great importance.

REFERENCES

1. Tillson, D.S., "Shallow Tubewell Mannual" Bangladesh Krishi Bank, June, 1978.
2. Islam, M.Q., Akhanda, M.A.R., and Islam, O.; "An Experimental Investigation of the Performance of a Centrifugal Fan with Radial Inclined Vane Impellers", Mechanical Engineering Research Bultin Vol.2 (1979) No.1.
3. British Standard 599: 1966, Methods of Testing Pump. ■■

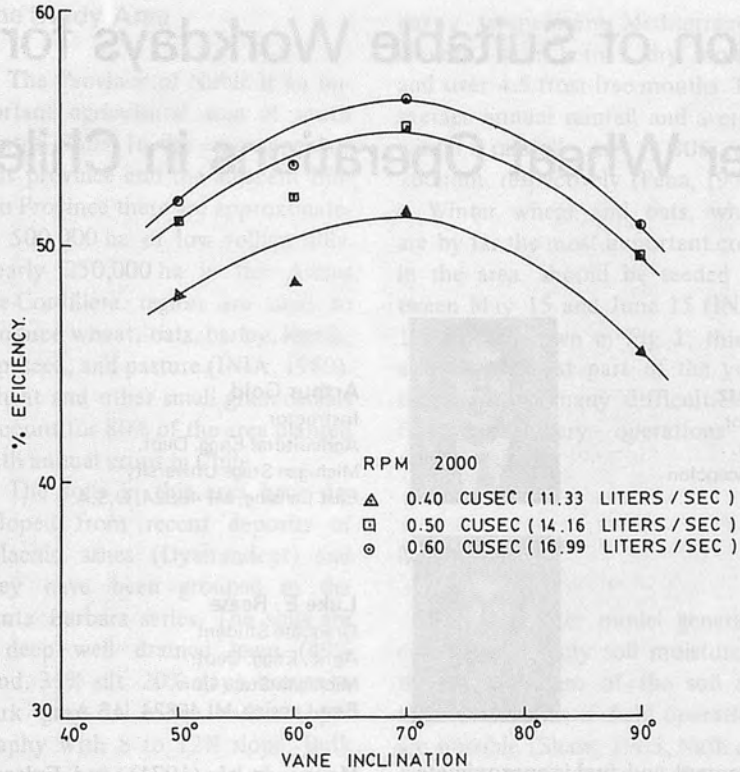

Fig. 4 Efficiency-vane angle relation at various discharges.

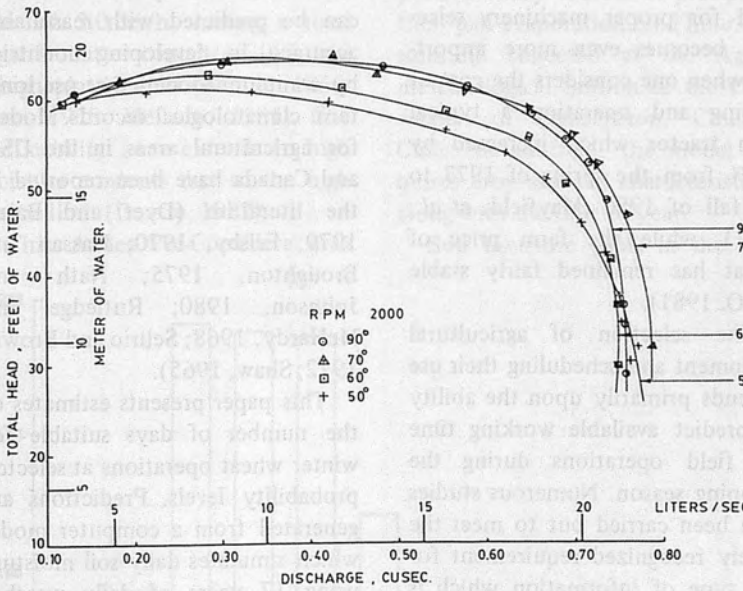

Fig. 5 Effect of vane inclination on the head and discharge.

Computer Prediction of Suitable Workdays for Mechanized Winter Wheat Operations in Chile

by
Edmundo J. Hetz
Associate Professor
Agric. Engg. Dept.
University of Concepcion
Chillan, Chile

Arthur Gold
Instructor
Agricultural Engg. Dept.
Michigan Stage University
East Lansing, MI 48824, U.S.A.

Luke E. Reese
Graduate Student
Agric. Engg. Dept.
Michigan State Univ.
East Lansing, MI 48824, U.S.A.

Abstract

Suitable workdays for winter wheat operations in south central Chile are presented over a range of probability levels. Predictions are generated from a computer model which simulates daily soil moisture using 17 years of daily weather records. Results show that few suitable workdays are available during seeding (May-June), demanding a careful approach to the selection and scheduling of planting equipment.

Introduction

Machinery management decisions are among the most important that farmers make in today's agriculture. Their importance stems from the long-term effect they have and the high proportion of total production costs incurred by farm machinery. These decisions are extremely important in Chile, where farmers have to compete for the international grain market, and where the purchase price of farm equipment and fuel is approximately double the price that a farmer pays in the USA (Hetz, 1982). The need for proper machinery selection becomes even more important when one considers the cost of owning and operating a typical farm tractor which increased by 100% from the spring of 1977 to the fall of 1980 (Mayfield, *et al.*, 1981), while the farm price of wheat has remained fairly stable (FAO, 1981).

The selection of agricultural equipment and scheduling their use depends primarily upon the ability to predict available working time for field operations during the cropping season. Numerous studies have been carried out to meet the widely recognized requirement for this type of information which is readily available for the major agricultural regions of the USA, Canada and Europe (i.e., ASAE, 1982; Baier, 1973; Van Kampen, 1971). In most developing countries, particularly in Chile, this kind of data is sorely missing.

Records of days suitable for fieldwork, like the ones reported by Morey, *et al.* (1971), and Fulton, *et al.* (1976) have not been kept in Chile. Suitable days for fieldwork can be predicted with reasonable accuracy in developing countries by computer models that use long-term climatological records. Models for agricultural areas in the USA and Canada have been reported in the literature (Dyer and Baier, 1979; Frisby, 1970; Hassan and Broughton, 1975; Nath and Johnson, 1980; Rutledge and McHardy, 1968; Selirio and Brown, 1972; Shaw, 1965).

This paper presents estimates of the number of days suitable for winter wheat operations at selected probability levels. Predictions are generated from a computer model which simulates daily soil moisture using 17 years of daily weather records. Parameters used in this model are: precipitation, pan evaporation, and hours of sunshine. In regions where pan evaporation records do not exist, Penman's modified equation (Merva and Fernandez, 1982) might be used to generate evapotranspiration data from standard meteorological data.

The Study Area

The Province of Nuble is an important agricultural area of south central Chile. In the eastern part of this province and the adjacent Bio-Bio Province there are approximately 500,000 ha of low rolling hills. Nearly 250,000 ha in this Andes Pre-Cordillera region are used to produce wheat, oats, barley, lentils, rapeseed, and pasture (INIA, 1980). Wheat and other small grain cereals account for 80% of the area planted with annual crops in Chile.

The soils in this area have developed from recent deposits of volacnic ashes (Dystrandept) and they have been grouped in the Santa Barbara series. The soils are a deep well drained loam (49% sand, 31% silt, 20% clay), brown to dark gray in color, and a topography with 8 to 12% slope. Bulk density is 0.65 g/cc and the total porosity is 75%. The soils are highly permeable with a basic infiltration rate of 5.0 cm/h, having a total organic matter content of 16%, and a high plastic limit (Bernier, 1966; Pena, 1978; Mellado, 1981). The trafficability zone extends to high moisture contents due to the high plastic limit (Duarte, 1982).

This Andes Pre-Cordillera area has a temperature Mediterranean climate, with 1 to 3 dry months and over 4.5 frost-free months. The average annual rainfall and average winter rainfall are 1 305 and 760 mm, respectively (Pena, 1978).

Winter wheat and oats, which are by far the most important crops in the area, should be seeded between May 15 and June 15 (INIA, 1980). As shown in **Fig. 1**, this is also the rainiest part of the year, thus creating many difficulties to finish machinery operations on time.

Methods

The computer model generates estimates of daily soil moisture in the top 150 mm of the soil and then determines if field operations are possible (Shaw, 1965; Nath and Johnson, 1980; Selirio and Brown, 1972). The model is based on 17 years of daily records of precipitation, pan evaporation, and hours of sunshine collected at the Agrometeorological Station of the University of Concepcion, Chillan, Chile. In addition, the model requires crop and soil characteristics, along with the time of year.

Soil moisture (SM) in the top 150 mm for day (t) was calculated by the following equation:

$$SM(t) = SM(t-1) + Infiltration(t) - Evapotranspiration(t) - Drainage(t)$$

Soil moisture was initialized at Permanent Wilting Point at the start of each computational year (March 1), since January and February are consistently hot and dry. Infiltration was calculated whenever precipitation occurred on day(t) and the soil moisture content was below saturation. Based on the findings of Mellado (1981), infiltration was assumed to be 0.9 of precipitation until saturation is reached. Daily evapotranspiration was based on daily evaporation from a U.S. Weather Bureau Class A pan. Coefficients for crop stage (Pair, *et al.*, 1976; Tulu, 1974), and root distribution throughout the root zone (Baier and Robertson, 1966) were employed to yield actual evapotranspiration in the top 150 mm of the soil. Evapotranspiration was assumed to be zero when the soil moisture content was at Permanent Wilting Point. Whenever the soil moisture was greater than field capacity a drainage quantity was calculated for use in the moisture budget of the following day. It was assumed that the soil would drain to field capacity two days after a saturating rain (Hassan and Broughton, 1975).

Once soil moisture was computed, a set of criteria was used to determine if conditions were suitable for soil engaging, above ground and cereal harvesting machinery operations.

A suitable day for soil engaging operations had to meet the following criteria:

(a) soil moisture less than 99% of Available Water Capacity (Rutledge and McHardy, 1968);
(b) less than mm precipitation on the day in question (Frisby, 1970).

A suitable working day for above ground operations requires:

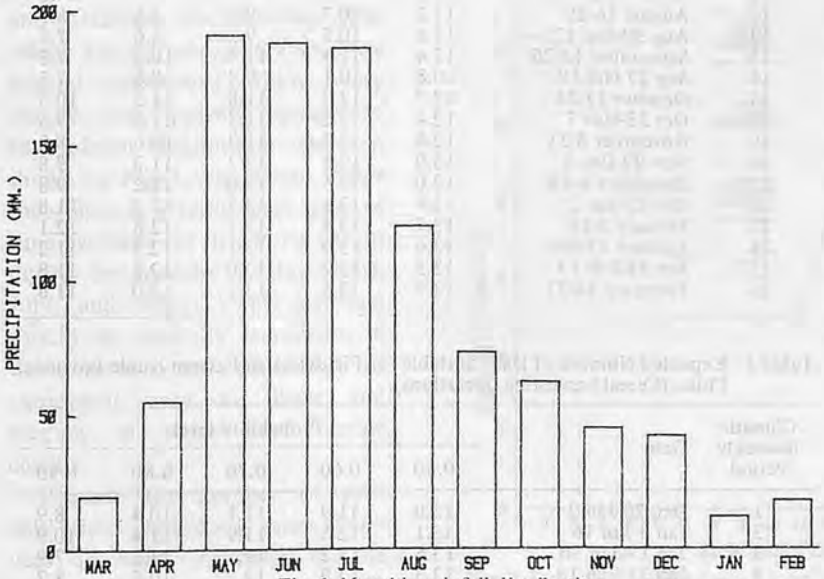

Fig. 1 Monthly rainfall distribution.

(a) less than 2 mm precipitation;
(b) soil moisture of previous day less than saturation (Hunt, 1980; Frisby, 1970).

A suitable day for cereal harvesting met all the following criteria (Von Bargen, 1966; van Kampen, 1971):

(a) less than 2 mm precipitation;
(b) eight or more hours of sunsine (unless soil moisture was at Permanent Wilting Point);
(c) soil moisture less than saturation;
(d) less than 12 mm precipitation on the previous day.

After the weather records were transformed into suitable and non-suitable workdays, estimates of the minimum number of suitable days at selected probability levels were derived using empirical cumulative probability distributions (Rosenberg, *et al.*, 1981). The only data available to compare with the computer predictions came from a survey of farmers carried out by Hetz (1982). Farmers were asked to estimate the average number of days suitable for soil engaging operations for half-months periods, between April 1 and September 30.

Results and Discussion

Tables 1, 2, and 3 depict the expected minimum number of days suitable for different operations at selected probability levels. Since most farm operations occur over at least a two-week period, biweekly values are presented. Table 4 depicts a comparison between the results of the farmer's survey and the model output at design probability levels of 0.60, 0.70, and 0.80.

The opinions of surveyed farmers were matched most closely by the 0.7 probability level. For 10 of the 12 biweekly periods the 0.70 design probability values were found to be within 10% of the farmers' estimates (r = 0.91). Dis-

Table 1 Expected Number of Days Suitable for Fieldwork in Eastern Nuble Province, Chile. (Cereal harvesting operations).

Climatic Biweekly Period	Date	Probability level				
		0.50	0.60	0.70	0.80	0.90
1	March 1-14	13.3	13.0	12.7	12.4	12.1
2	March 15-28	13.4	13.2	12.8	12.3	10.6
3	Mar 29-Apr 11	13.1	12.7	12.2	11.6	10.6
4	April 12-25	11.6	10.9	10.3	9.6	8.6
5	Apr 26-May 9	11.2	10.5	9.4	8.1	4.8
6	May 10-23	7.0	6.1	5.5	4.8	3.8
7	May 24-June 6	8.2	7.6	6.9	5.1	0.8
8	June 7-20	7.4	6.9	6.3	5.1	3.1
9	June 21-July 4	6.8	6.2	5.6	5.0	2.6
10	July 5-18	8.1	7.6	6.9	5.6	3.8
11	July 19-August 1	8.0	7.1	5.9	4.6	1.8
12	August 2-15	9.1	8.1	7.5	6.4	3.5
13	August 16-29	11.2	10.5	9.4	7.6	6.4
14	Aug 30-Sep 12	11.0	10.1	9.0	8.1	6.8
15	September 13-26	12.3	11.7	11.1	10.3	6.6
16	Sep 27-Oct 10	10.4	9.7	9.0	8.2	7.4
17	October 11-24	12.4	11.9	11.5	11.1	10.4
18	Oct 25-Nov 7	12.3	11.9	11.4	10.6	8.8
19	November 8-21	12.7	12.2	11.5	10.1	8.5
20	Nov 22-Dec 5	13.0	12.6	12.2	11.3	9.8
21	December 6-19	12.9	12.3	11.8	11.2	9.8
22	Dec 20-Jan 2	13.4	13.1	12.6	12.0	11.2
23	January 3-16	13.7	13.4	13.2	12.8	12.1
24	January 17-30	13.5	13.2	13.0	12.2	11.2
25	Jan 31-Feb 13	13.5	13.2	13.0	12.5	11.8
26	February 14-27	13.7	13.5	13.2	13.0	11.6

Table 2 Expected Number of Days Suitable for Fieldwork in Eastern Nuble Province, Chile. (Above ground operations)

Climatic Biweekly Period	Date	Probability level				
		0.50	0.60	0.70	0.80	0.90
1	March 1-14	13.3	13.0	12.7	12.4	12.1
2	March 15-28	13.4	13.2	12.8	12.3	11.5
3	Mar 29-Apr 11	13.2	12.8	12.3	11.6	10.6
4	April 12-25	11.9	11.3	10.8	10.0	8.6
5	April 26-Mary 9	11.6	10.9	10.3	9.6	8.1
6	May 10-23	9.1	8.6	8.1	6.7	5.1
7	May 24-June 6	10.5	9.7	7.9	6.6	4.1
8	June 7-20	8.6	8.1	7.5	6.8	5.8
9	June 21-July 4	9.0	7.9	7.0	6.4	5.8
10	July 5-18	9.8	9.1	8.4	6.8	4.8
11	July 19-August 1	8.5	7.7	6.9	5.1	4.2
12	August 2-15	10.0	9.4	8.7	7.6	4.6
13	August 16-29	11.3	10.7	9.9	8.1	6.3
14	Aug 30-Sep 12	11.1	10.5	9.6	8.6	7.5
15	September 13-26	12.4	11.9	11.4	10.4	7.5
16	Sep 27-Oct 10	10.8	10.1	9.4	8.6	7.5
17	October 11-24	12.7	12.3	11.8	11.3	10.5
18	Oct 25-Nov 7	12.4	12.0	11.5	11.0	9.6
19	November 8-21	12.8	12.3	11.7	10.6	8.8
20	Nov 22-Dec 5	13.0	12.6	12.2	11.3	9.8
21	December 6-19	13.0	12.5	12.0	11.2	9.8
22	Dec 20-Jan 2	13.4	13.1	12.7	12.3	11.8
23	January 3-16	13.7	13.4	13.2	12.8	12.1
24	January 17-30	13.6	13.3	13.1	12.3	11.2
25	Jan 31-Feb 13	13.5	13.2	13.0	12.5	11.8
26	February 14-27	13.7	13.5	13.2	13.0	11.6

Table 3 Expected Number of Days Suitable for Fieldwork in Eastern Nuble Province, Chile. (Cereal harvesting operations).

Climatic Biweekly Period	Date	Probability level				
		0.50	0.60	0.70	0.80	0.90
1	Dec 20-Jan 2	13.0	11.9	11.1	10.4	8.9
2	Jan 3-Jan 16	13.1	12.5	11.9	11.4	10.9
3	Jan 17-Jan 30	13.5	13.2	12.7	11.2	7.9
4	Jan 31-Feb 13	13.3	12.9	12.2	10.5	8.7

Table 4 Comparison of Farmers' Survey and Model Results for Expected Number of Days Suitable for Soil Engaging Operations in Eastern Nuble Province, Chile.

Climatic Biweekly Period	Farmers' Survey	Model results at probability level:		
		0.60	0.70	0.80
March 29-April 11	---	12.7	12.2	11.6
April 12-25	10.9	10.9	10.3	9.6
April 26-May 9	9.4	10.5	9.4	8.1
May 10-23	7.6	6.1	5.5	4.8
May 24-June 6	6.7	7.6	6.9	5.1
June 7-20	6.2	6.9	6.3	5.1
June 21-July 4	5.9	6.2	5.6	5.0
July 5-18	5.8	7.6	6.9	5.6
July 19-August 1	5.7	7.1	5.9	4.6
August 2-15	7.2	8.1	7.5	6.4
August 16-29	8.9	10.5	9.4	7.6
August 30-Sep 12	9.4	10.1	9.0	8.1
September 13-26	10.4	11.7	11.1	10.3
September 27-Oct 10	---	9.7	9.0	8.2
Number of periods within 10% of survey results	---	4	10	2

crepancy in some periods may be due to the transfer of values from the original half-months of the survey to the biweekly periods of the model (Fulton, *et al.*, 1976). In addition, the survey was based on farmers' memory on long-term weather patterns, whereas the model uses daily records over the 17-year period.

Fig. 2 depicts a comparison between the expected number of field workdays for above ground, soil engaging, and cereal harvesting operations at the 0.80 design probability level.

Soil engaging operations include tillage and seeding, while above ground operations include spraying and fertilizer broadcasting. The values for soil engaging and above ground operations follow very closely the opposite pattern of the rainfall distribution which is shown in **Fig. 1**. **Fig. 2** also shows that there is a fairly large span of time available for fieldwork, except during the months of May, June, July, and August. This last fact should be carefully considered in the selection and scheduling of equipment used in tillage and seeding of winter and spring cereals.

Because the number of suitable field workdays varies from year to year, estimates of the minimum number available at different probability or certainty levels are required. Fulton, *et al.* (1976), suggested that for operations where failure to complete the work on time means only inconvenience or slight reductions in yield, a probability level of 0.50 might be acceptable. Such an operation might be applying fertilizer to pastures. Where timeliness is important for maximum yields, such as cereal seeding, most farmers would probably accept a probability of 0.70, but where failure to complete an operation becomes costly due to yield reduction, a probability level of 0.80 or higher is desirable. Such an operation might be cereal harvesting in Chile.

An example will illustrate the usefulness of suitable working days information. Assume a farmer who seeds 75 ha of wheat yearly is considering the purchase of a grain drill. The farmer expects to work 10 h a day and seeds between May 24 and June 6. From **Table 1** he selects 6.9 days as the minimum number of days suitable for fieldwork that he can expect 7 years out of 10 during that period. To complete the job in the allocated time, the farmer requires a minimum seeding capacity of 1.08 ha/h (75 ha divided by 69 h). Considering a work speed of 7.0 km/h and a 65% field efficiency he requires a minimum grain drill width of 2.37 m. As most of the grain drills in Chile have rows separated 0.18 m (7 in), a farmer there should select a 13-row seeder.

Conclusion

Model results show that there is sufficient time to complete most fieldwork for wheat production in the eastern part of the Province of

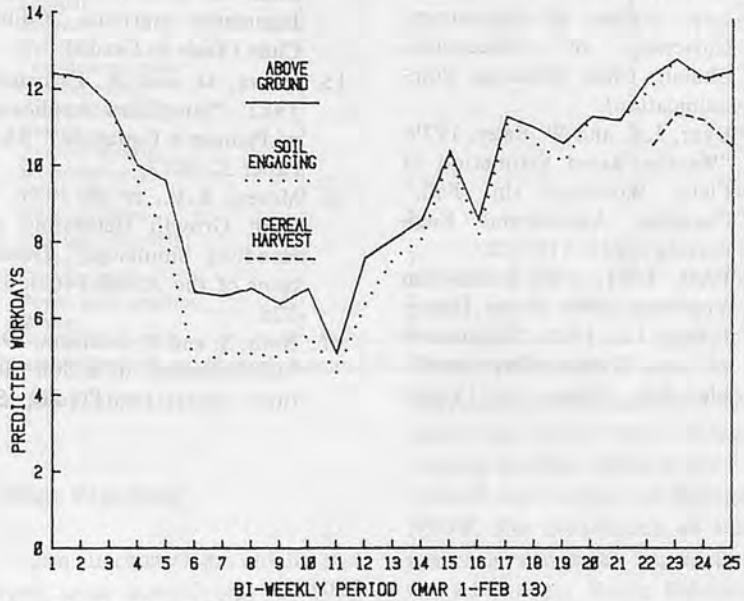

Fig. 2 Predicted suitable days, 0.8 probability level.

Nuble, Chile. The results also show that at wheat, oats, and lentils seeding time (May-June), the expected number of days suitable for fieldwork is greatly reduced. This creates the need for a careful approach to the selection and scheduling of agricultural equipment in order to finish field operations on time. Model results at the 0.70 design probability level agree fairly well with the farmers' estimation of days suitable for fieldwork. It would, however, be very useful to set up a network of field observers and rain gauges to collect actual data on fieldwork days.

REFERENCES

1. ASAE. 1982. ASAE Yearbook. St. Joseph, Michigan, USA.
2. Baier, W. 1973. "Estimation of Field Workdays in Canada from the Versatile Soil Moisture Budget." Canadian Agricultural Engineering 15(2): 84-87.
3. Bernier, R. 1966. "Caracteristicas Hidricas de Ocho Suelos de la Provincia de Nuble." Universidad de Concepcion, Escuela de Agronomia, Chillan, Chile (Tesis de Grado).
4. Duarte, N. 1982. Soils Laboratory, College of Agriculture, University of Concepcion, Chillan, Chile (Personal Communication).
5. Dyer, J.A. and W. Baier. 1979. "Weather-Based Estimation of Field Workdays in Fall." Canadian Agricultural Engineering 21(2): 119-122.
6. FAO. 1981. FAO Production Yearbook, 1981. Rome, Italy.
7. Frisby, J.C. 1970. "Estimation of Good Working Days Available for Tillage in Central Missouri." Transactions of the ASAE 13(3): 641-643.
8. Fulton, C.V., *et al.* 1976. "Expected Number of Days Suitable for Fieldwork in Iowa." Transactions of the ASAE 19(6): 1045-1047.
9. Hassan, A.E. and R.S. Broughton. 1975. "Soil Moisture Criteria for Tractability." Canadian Agricultural Engineering 17(2): 124-129.
10. Hetz, E.J. 1982. "A Field Machinery Selection Model for Wheat Producers in the Andes Pre-Cordillera of South Central Chile." Unpublished Ph.D. Dissertation, Michigan State University, East Lansing, Michigan, USA.
11. Hunt, D. 1980. "Weather Data Use in Field Machinery Operations." ASAE Paper 80-4519.
12. INIA. 1980. "Proyecto de Desarrollo Tecnológico Para la Pre-Cordillera de Ñuble." Consolidado 1976-1980. Estación Experimental Quilamapu, Chillán, Chile.
13. Mayfield, W., *et al.* 1981. "A New Method for Estimating Farm Machinery Costs." Transactions of the ASAE 24(6): 1446-1448.
14. Mellado, L. 1981. "Escurrimiento en dos Hoyas Hidrográficas Pequeñas." Universidad de Concepción, Depto. Ingeniería Agrícola, Chillán, Chile (Tésis de Grado).
15. Merva, G. and A. Fernandez. 1982. "Simplified Application of Penman's Equation." ASAE Paper 32-2013.
16. Morey, R.V., *et al.* 1971. "A Corn Growth Harvesting and Handling Simulator." Transactions of the ASAE 14(2): 326-328.
17. Nath, S. and W. Johnson. 1980. "Development of a Soil Moisture Model to Predict Soil Moisture and Tractability for Harvesting." AMA 11(1): 73-78.
18. Pair, C.H., *et al.* 1976. "Sprinkler Irrigation." Irrigation Association, Silver Springs, Maryland, USA.
19. Peña, L. 1978. "Control de Erosión Mediante dos Niveles de Densidad de Paja en un Trumao de Lomaje." Agricultura Técnica (Chile) 38(2): 49-53.
20. Rosenberg, S., *et al.* 1981. "Suitable Workday Probabilities in Michigan: A Soil Moisture Based Approach." Agricultural Economics Research Report, Michigan State University, East Lansing, Michigan, USA.
21. Rutledge, P.L. and F.V. McHardy. 1968. "The Influence of Weather on Field Tractability in Alberta." Canadian Agricultural Engineering 10(2): 70-73.
22. Selirio, I.S. and D.M. Brown. 1972. "Estimation of Spring Workdays from Climatological Records." Canadian Agricultural Engineering 14(2): 79-81.
23. Shaw, R.H. 1965. "Estimation of Field Working Days in the Spring from Climatological Data." Iowa State Journal of Science 39(4): 393-402.
24. Tulu, M., *et al.* 1974. "Timeliness Costs and Available Working Days – Shelled Corn." Transactions of the ASAE 17(10): 798-800, 804.
25. Van Kampen, J.H. 1971. "Farm Machinery Selection and Weather Uncertainty." In Systems Analysis in Agricultural Management, John Wiley, Sidney, Australia.
26. Von Bargen, K. 1966. "Systems Analysis in Hay Harvesting." Transactions of the ASAE 9(6): 768-770, 773. ■■

Tillage Practices in Mechanized Farms in Pakistan

by
Khwaja Altaf Hussain
Department of Farm Machinery and Power
University of Agriculture
Faisalabad, Pakistan

Abdul Shakoor Khan
Department of Farm Machinery and Power
University of Agriculture
Faisalabad, Pakistan

A.D. Chaudhry
Department of Farm Machinery and Power
University of Agriculture
Faisalabad, Pakistan

Introduction

In order to assess the present cultivation techniques in Pakistan a survey was conducted by interviewing thirty progressive farmers from all provinces and its findings are also included in this report.

On the basis of survey findings, it became very evident that farmers are not fully aware of the need for tillage machines. Majority of them are using cultivators for both primary and secondary tillage operations. Mouldboard plow is another implement which is being used by 40% of the surveyed farms in NWFP and by 87% in Baluchistan. Disc harrow is quite popular in Sind. Other tillage implements are not commonly used in the country. Very little research has been done on the selection of proper tillage implements for seedbed preparation. There is a need for a systematic effort to be made by the research institutes and both public and private agencies dealing with farm machines for the evaluation, demonstration and availability of these machines to the farmers (Table 1).

Table 1 Inventory of Farm Machinery at 30 Farms

Item	Sind (6)*	NWFP (6)	Baluchistan (8)	Punjab (10)	Total (30)
Tube-well	2	1	8	8	19
Tractor	12	12	9	26	59
Cultivator	6	10	9	19	44
Moldboard plow	6	1	7	2	16
Disc plow	2	4	–	–	6
Chisel plow	–	–	–	1	1
Disc harrow	5	3	–	2	10
Rotary cultivator	2	1	–	4	7
Planker	2	2	5	3	12
Leveller	7	6	5	5	23
Clod breaker	4	–	–	4	8
Scraper	1	–	–	5	6
Ridger	5	1	–	4	10
Ditcher	1	–	–	–	1
Fertilizer spreader	1	–	–	3	4
Combine drill	1	–	–	3	4
Grain drill	1	–	–	4	5
Others	3	–	–	1	4
Tractor sprayer	4	–	–	1	5
Motor sprayer	4	–	–	12	16
Hand sprayer	9	–	4	6	19
Reaper binder	1	2	–	–	3
Combine harvestor	–	–	–	2	2
Threasher	4	7	–	10	21
Corn sheller	–	2	–	–	2
Power cane crusher	–	2	–	–	2
Trailer	2	5	–	5	12

* Numbers in the bracket show the number of farmers interviewed.

Tillage Practices

Farm mechanization in the surveyed areas started only in 1952 (Table 2). The International Harvester B-450 and John Deere were the first ever purchased tractors in Sind, whereas presently 72% of the tractors are Belarus. In NWFP, the distribution of tractor makes is somewhat balanced with the six farmers. But in Baluchistan only the Massey Ferguson tractor is

Talbe 2 Tractors Owned by 24 Sample Farmers

Year	Sind	NWFP	Baluchistan	Punjab	Total
1952-61	1	–	–	2	3
1962-71	3	4	2	2	11
1972-81	1	2	6	1	10
Total	5	6	8	5	24

Table 3 Tractor Makes Distribution

Manufacturer	Sind	NWFP	Baluchistan	Punjab	Total
Massey Ferguson	1	2	9	11	23
Ford	1	2	–	7	10
Fiat	–	2	–	3	5
Belarus	8	–	–	–	8
International Harvestor	–	4	–	–	4
Dong fong	1	–	–	–	–
Deutz	–	1	–	–	–
Others	–	–	–	3	5
Total	11	11	9	24	55

used. In Punjab 45% of the tractors are Massey Ferguson, 30% are Ford, 12% each are Fiat and others. Out of total 55 tractors in all the sample farmers, 23 are Massey Ferguson, 10 are Ford, 8 are Belarus, 5 are Fiat and rest 9 are other makes (Table 3).

Tractor Use

The annual use per tractor was highest in Punjab and lowest in Baluchistan. The total hours for which a tractor was engaged per year was 2 133 in Sind, 1 967 h in NWFP, 1 422 h in Baluchistan and 2 579 h in Punjab. The farmers in Punjab are engaging the tractor power to maximum utilizing tractor for 1 600 h per farm per annum. Sind and NWFP farmers are utilizing the tractor for more than 400 h per farm per annum. This use hour analysis is directly related to fuel consumption per tractor and per hour at each farm as well as allocation of tractor use hours to tillage and other equipments.

The average fuel consumption of all makes of tractors was 4 ℓ/h with a total consumption of 393 kℓ at all the 30 surveyed farms. The fuel consumption per hour was 5.4, 4, 3.4 and 3.2 ℓ for Sind, NWFP, Baluchistan and Punjab, respectively (Table 4). Tractor use hours for tillage operations are estimated to be minimum as compared to other farm operations.

Area under cultivation was reported by 29 farmers as their own and by one as rented. The size of holdings were less than 25 acres with 3, up to 50 acres with 7, up to 100 acres with 8, up to 200 acres with 4 farmers. This indicates that 50% of the farmers possess cultivated area between 50-100 acres and the rest are approximately equally distributed. Another important aspect in this connection is that all the provinces come under the same above stated classification.

All the cultural practices in the provinces surveyed were found on four different types of soils, i.e., clay, clay loam, loam and sandy loam. The range of cultivation depth was 3 to 12 in. for clay, 1-12 in. for clay loam and sandy loam whereas 6-12 in. for loam soil. Clay and clay loam soils are being tilled in Sind and NWFP, loam and sandy loam soils in Baluchistan and all the above four are being tilled in Punjab.

Investment trend in mechanization falls into four categories: tractor, tillage equipments, other equipments and tube-wells. The total inventory at 30 surveyed farms is shown in Table 1.

Total investment in tractors was Rs. 2.7 million, for tillage equipment Rs. 0.35 m, for other equipment Rs. 0.73 m, and for tubewells Rs. 2.2 m, which indicated least investment for tillage equipment. Average investment per farmer amounts to Rs. 106 700, Rs. 15 282, Rs. 33 502 and Rs. 139 563 respectively. This type of investment in agricultural machinery shows the priority being allocated by the farmers to irrigation practices, tractors, other equipments and tillage implements. Thus we can conclude that investment in agricultural machinery for the adoption of mechanized technology very much depends upon the water availability and source of power.

When the 30 surveyed farmers were asked the reasons for adoption of agricultural mechanization, 35% reported 50-100% increase in yield, 44% mentioned this as a solution to labour problem, 53% stated it a solution for timely operation. The other reasons figured out were easy land development, increased area under cultivation, comfort, to experiment new cultivation technology and overall increase in work efficiency.

Tillage

The selection and use of tillage and other equipments started with the commencement of mechaniza-

Table 4 Annual Use of Tractors

Item	Sind	No.	NWEP	No.	Baluchistan	No.	Punjab	No.	Total	No.
Total tractor hours	25 600 h	12	23 600 h	12	12 800 h	9	36 100 h	14	98 100 h	47
Total hours/tractor	2 133 h	12	1 967 h	12	1 422 h	9	2 579 h	14	2 087 h	47
Total hours/farmer	4 267 h	6	4 720 h	5	1 600 h	8	7 220 h	5	4 087 h	24
Total fuel consumption	139 000 ℓ	12	95 062 ℓ	12	44 100 ℓ	8	115 875 ℓ	11	393 975 ℓ	43
Total fuel consumption/tractor	11 417 ℓ	12	7 922 ℓ	12	5 512 ℓ	8	16 652 ℓ	11	9 162 ℓ	43
Total fuel consumption/farm	23 167 ℓ	6	19 012 ℓ	5	16 300 ℓ	7	45 794 ℓ	4	17 905 ℓ	22
Fuel consumption/hour	5.4 ℓ	–	4.0 ℓ	–	3.4 ℓ	–	3.2 ℓ	–	4.0 ℓ	–

tion, whereas the number of implements purchased increased with the passage of time. The sequence of tillage implements purchase were cultivator, disc harrow and disc plow in Sind; cultivator, disc plow, disc harrow and rotary cultivator in NWFP; cultivator and disc plow in Baluchistan and Raja hall, cultivator, disc harrow, disc plow, chisel plow and rotary cultivator in Punjab.

The use of cultivator for tillage purpose was the highest and bar harrow was the lowest on all the surveyed farms, details of which are summarized in **Table 5**. In Sind, for example, 4 farmers out of 6(66%) reported the use of cultivator whereas, all the farmers surveyed in NWFP, Baluchistan and Punjab were using this implement extensively.

Table 6 shows farmers category on the basis of set of implement combination and **Table 7** shows the depth of cut by various tillage implements. Majority of the farmers are using tillage implements with a depth of cut of 5 inches and maximum of 12 inches. Very few farmers report the use of tillage implements to a shallow depth of 2 inches, with the majority in NWFP.

No consistent relationship was found between size of land holdings and number of tillage implements possessed by individual farmer in all the provinces. However the average acres per implement were highest in Baluchistan (61 acres) and lowest in NWFP (22 acres) which seems reasonable as we look through the size of holdings on the surveyed farms. In Sind and Punjab it was 51 and 56 acres, respectively.

Table 8 shows annual use hours of tillage implements for different crops. In Sind, for example, tillage implements are mainly used for sugarcane, cotton and wheat crops with an average tilling hours of 689 per farm, 4.3 h per acre and 828 h per crop. The maximum tillage time of 1398 h were utilized for cultivation of wheat and minimum tillage time of 165 h for growing vegetables.

Table 5 Farmers Reporting Implement Use

Implement	Sind (6)*		NWFP (5)		Baluchistan (8)		Punjab (9)		Total (28)	
Cultivator	4	(66%)	5	(100%)	8	(100%)	9	(100%)	26	(91%)
Moldboard plow	1	(16%)	2	(40%)	7	(87%)	1	(11%)	11	(40%)
Disc plow	2	(33%)	–	–	–	–	–	–	2	(7%)
Disc harrow	6	(100%)	3	(60%)	–	–	1	(11%)	10	(35%)
Bar harrow	–	–	–	–	–	–	1	(11%)	1	(4%)
Chisel plow	–	–	–	–	–	–	2	(22%)	2	(7%)
Rotary cultivator	–	–	2	(40%)	–	–	3	(33%)	5	(18%)
Rotary tiller	1	(16%)	–	–	–	–	–	–	1	(4%)

* Numbers in the bracket show percentage of farmers in posession of the implement.

Table 6 Farmer Catagory on the Basis of Set of Implement Combination

Combination	Province				
	Sind	NWFP	Baluchistan	Punjab	Total
3	–	–	1	1	2
3+4	–	–	7	1	8
3+7	1	2	–	–	3
3+8	–	–	–	2	2
3+5	–	1	–	–	1
4+7	1	–	–	1	2
3+4+5	–	1	–	–	1
3+7+8	–	1	–	–	1
3+5+8	–	–	–	1	1
3+8+13	–	–	–	1	1
3+5+7+13	1	–	–	–	1
3+4+7+13	1	–	–	–	1
3+6+7+13	1	–	–	1	2
3+4+5+13+14	1	–	–	–	1
Total	6	5	8	8	27

Implement Code: 3 – Cultivator, 4 – Moldboard plow, 5 – Disc plow, 6 – Chisel plow, 7 – Disc harrow, 8 – Rotary cultivator, 13 – Ridger, 14 – Ditcher.

Table 7 Implements Used at Different Depths Unit: inch

Implement	Sind		NWFP		Baluchistan		Punjab	
	max	min	max	min	max	min	max	min
Cultivator	6	6	8	2	9	4	9	6
Moldboard plow	12	12	12	9	12	9	12	10
Disc harrow	12	3	12	5	–	–	8	8
Disc plow	6	6	–	–	–	–	–	–
Bar harrow	–	–	–	–	–	–	1	1
Chisel plow	–	–	–	–	–	–	12	12
Rotary cultivator	–	–	4	4	–	–	6	5
Rotary tiller	7	6	–	–	–	–	–	–

Conclusion

An ex-member of World Plowing Organization pointed out that at the time of introduction of agricultural mechanization in Pakistan, the farmers of different regions adopted the same tractor-drawn implement which was introduced initially by tractor manufacturers. He stated that in Punjab and NWFP cultivator was initially introduced, while in Sind and Baluchistan, disc harrow and moldboard plow were introduced. However, no reason relating to soil characteristics, cropping pattern and farm size was given. It is interesting to note that at the time of survey of the farms of the four provinces that reason seems to carry weight regarding introduction of tractor drawn tillage implements in the country.

During the survey the following

Table 8 Annual Use Hours of Tillage Implement for Different Crops

Unit: h

Crops	Sind			NWFP			Baluchistan			Punjab			Total		
	Hours	Acres	Nos.	Hours	Acres	Nos.	Hours	Acres	Nos.	Hours	Acres	Nos.	Hours	Acres	Nos.
Sugarcane	877	249	5	317	115	4	–	–	–	450	150	1	1 644	514	10
Cotton	1 534	289	4	–	–	–	–	–	–	1 590	440	6	3 124	729	10
Rice	–	–	–	–	–	–	–	–	–	1 760	320	2	1 760	320	2
Maize	–	–	–	191	61	5	10	8	1	–	–	–	201	69	6
Tobacco	–	–	–	–	–	–	202	63	4	–	–	–	202	63	4
Fodder	–	–	–	–	–	–	–	–	–	15	15	1	15	15	1
Vegetable	165	55	1	60	15	1	148	79	7	–	–	–	373	149	9
Total Khraif	2 576	593	6	568	191	6	360	150	8	3 815	925	10	7 319	1 859	30
Wheat	1 398	332	3	235	77	4	317	96	6	3 697	940	8	5 647	1 445	21
Gram	–	–	–	–	–	–	–	–	–	5	5	1	5	5	1
Barley	–	–	–	–	–	–	30	12	2	–	–	–	30	12	2
Potato	–	–	–	–	–	–	–	–	–	1 350	180	1	1 350	10	1
Fodder	–	–	–	–	–	–	109	33	5	30	20	1	139	53	6
Vegetable	165	55	1	5	2	1	–	–	–	–	–	–	170	57	2
Total Rabi	1 563	357	6	240	79	6	456	141	8	5 082	1 145	10	7 341	1 752	30
Grand total (Kharif+Rabi)	4 139	950	6	808	270	6	816	291	8	8 897	2 070	10	14 660	3 611	30
Average/Farmer	689	158	1	135	45	1	102	36	1	889	207	1	489	120	1
Average/Acres	4.3	1	1	3	1	1	2.8	1	1	4.3	1	1	4	1	1
Average/Hours	828	–	5	162	–	5	136	–	6	1 271	–	7	1 128	–	13

observations were made.

(a) The farmers are making minimum investment on tillage implements and they are not making combinations of tillage implements on scientific grounds.

(b) Majority of the farmers possess cultivator in Punjab and NWFP, disc harrow in Sind and mold board plow in Baluchistan. The farmers make random selection about other tillage equipment and their combination.

(c) Out of the total tractor power minimum is used on the tillage operation and the rest of time is spent on other farm operations particularly for haulage.

(d) Mode of selecting tillage equipments by the farmers is non-scientific and more or less depend upon market availability or institutional supply system.

(e) Lack of information about specialized tillage equipments for land development and crops raising prevails dominantly.

Recommendations

1. The institutions concerned are required to make extensive study about tillage operation and should suggest feasible/optimal solution relating use of particular implement or combination of implements for particular crop and soil.

2. Frequent farmer fairs and farm machinery shows should be arranged in villages for the benefit of manufacturers and farmers. In such programmes, the demonstrations of agricultural machinery could also be arranged.

3. Agricultural machinery and implements pools could be established at conveniently located points where the farmers could hire implements and machinery at subsidized rates. This can be done if an organization like World Plowing Organization could be instituted in the country.

4. Data of the different regions of the country relating type of soil, type of crop, weather conditions may be collected and analyzed. This will help in the introduction of proper tillage implement.

5. Supervised credit facility with compulsory tillage implements combination be provided by obtaining specific characteristics of soils, climatic condition of the area and cropping pattern followed by the farmer.

REFERENCES

1. Devrajani, B.T.; Ansari, A.Q.; Butlar, J.L. 1978. Appraisal of Mechanisation in Sind Province of Pakistan – A Research Approach. AMA. 9(4): 25-32.
2. Devrajani, B.T. 1978. Mechanized vs Bullock Cultivation–Consumptive Water Use. AMA. 9(2): 35-39.
3. Devrajani, B.T.; Ansari, A.Q.; Bulter, J.L. 1979. Efficiency of Machines in Sugarcane Production: Progressive vs Traditional Farming. AMA. 10(1): 16-22.
4. Sheikh, G.S.; Sial, J.; Afzal, M. 1980. Disk Harrow–an Appropriate Tillage Implement. AMA. 11(4): 41-44.

The Development of Agricultural Mechanization and its Strategies in Taiwan

by
Tien-song Peng
Senior Specialist in Farm Machinery
Department of Agricultural Production
Council for Agricultural Planning and Development
Executive Yuan
Taipei, Taiwan

Abstract

Through the successful development of adaptable machines, the readiness of farmers to adopt the machines and the full support of the government, remarkable progress has been achieved in the mechanization of rice farming operations in Taiwan. At present, the extent of mechanization is 95% for land preparation, 91% for rice transplanting, 80% for rice harvesting, and 50% for rice drying. However, more efficient mechanization is still desired toward the goal of saving labor and reducing production costs. The promotion of overall agri-mechanization through the development of machinery for dryland farming, livestock production, fisheries and forestry also needs to be accelerated.

Introduction

There are three major elements influencing the progress of agricultural mechanization, especially in a developing country. First, the adaptability of agricultural machinery to local conditions, such as climate, land, soil, and crops; second, the readiness of farmers to adopt mechanical farming to meet socio-economic requirements; and third, government policy for providing loans and subsidies, training farmers, strengthening after-sale service, and so forth.

During the past decade or so, considerable progress has been achieved in mechanizing the rice farming operations in Taiwan. Evidently, Taiwan possesses the three major elements in the development of agricultural mechanization.

Development of Mechanized Rice Farming

Use of Power Tillage

Draft animals used to be the main power source for land preparation in Taiwan. This situation has changed since power tillers replaced draft animals 20 years ago. Roughly speaking, one power tiller could substitute for five draft animals as manifested in the past two decades (**Table 1**). The full utilization of power tillers has made the extent of mechanization in land preparation reach 95% by mid-1982. Nowadays Taiwan, like Japan, is one of the most successful countries in the utilization of firm machines.

Table 1 Number of Power Tillers and Draft Animals in Taiwan

Year	No. of Power Tillers (Unit)	No. of Draft Animals (Head)
1960	3 708	417 122
1965	12 213	370 370
1970	28 292	275 007
1971	32 030	245 109
1972	35 222	227 077
1973	38 393	204 620
1974	42 123	194 906
1975	48 347	195 770
1976	55 748	188 748
1977	66 698	122 144
1978	74 504	106 052
1979	84 254	95 111
1980	94 037	83 564
1981	102 242	78 437
1982	107 943	

Source: Provincial Department of Agriculture & Forestry (PDAF)

Although power tillers at present are most adaptable to Taiwan's agricultural conditions, more efficient machines still need to be introduced to meet socio-economic requirements in future. During the past two years, the adoption of more and more farm tractors by local farmers proved to be a symptom of the turning point.

Introduction of Rice Transplanter

During the past decade, rice transplanters of first one-row hand-push type and then multi-row power-driven type were developed and widely extended in Japan. Since 1970, the machine had been introduced from Japan to Taiwan for extension purposes. Five years later, local manufacturers started to make the machine. With the introduction of power-driven, two-row transplanters, the extension

Table 2 Accumulated Number of Rice Transplanters

Year	Imported	Indigenous	Total
1970	280	0	280
1971	454	0	454
1972	658	0	658
1973	972	0	972
1974	1 564	0	1 564
1975	1 731	1 056	2 787
1976	1 731	4 377	6 018
1977	1 746	9 392	11 138
1978	4 438	14 340	18 778
1979	5 212	20 608	25 820
1980	6 070	27 169	33 239
1981	9 119	30 914	40 033
1982	10 591	35 014	35 605

Source: PDAF

Table 3 Accumulated Number of Rice Combines

Year	Imported	Indigenous	Total
1970	20	0	20
1971	75	0	75
1972	154	0	154
1973	329	0	329
1974	1 269	0	1 269
1975	2 004	6	2 010
1976	2 797	14	2 811
1977	3 840	90	3 930
1978	5 827	1 463	7 300
1979	7 174	3 391	10 565
1980	8 750	5 215	13 965
1981	10 322	6 288	16 610
1982	12 390	6 736	19 126

Source: PDAF,

Table 4 Accumulated Number of Grain Dryers

Year	Flat bed	Vertical Circulation	Total
1972	214	0	214
1973	361	0	361
1974	556	152	708
1975	1 946	187	2 133
1976	8 614	1 925	10 539
1977	12 724	5 426	18 150
1978	14 493	7 051	21 544
1979	15 907	9 125	25 032
1980	17 607	11 502	29 109
1981	19 319	14 381	33 700
1982	20 691	17 878	38 569

Source: PDAF

of handpush ones did not last long. The number of imported and indigenous transplanters is shown in **Table 2**.

In recent years, the number of four-row transplanters has rapidly increased. Indigenous six-row transplanters have also started to find their way into local markets.

The use of rice transplanters not only saves labor but raises rice yields also. However, the present transplanters necessitate specially prepared seedling mats and only young seedlings are adapted. More efficient and or automatic multi-purpose transplanters need to be developed in the future.

Development of Rice Combine

Self-propelled big combine-harvesters, developed 100 years ago and well-extended in Western countries, are not adaptable to Asian countries because they are too bulky to suit small-sized paddy field with a labyrinth of foot-paths.

The introduction of Japanese-made rice combines to Taiwan started in 1970. The machine of Japanese make consists of a reaper and an ordinary automatic power thresher. The performance of its earliest models is not good because of such defects as the failure of gathering mechanisms to gather up all the lodging stalks, the high loss of grain, and the necessity of hand sicklings around the field before the machine got into the plot. The latest models have been greatly improved in both performance and durability.

With indigenous ones put into use, the number of rice combines has significantly increased as shown in **Table 3**. However, the extension period of Japanese-type rice combines, just like Japanese-made rice transplanters, is rather short, since they are still at the developing stage. They are adoptable rather than adaptable. For one thing, the machine does not operate well, particularly its cleaning device which is unfit to operate in early mornings or after rainfall when the moisture content of grain is high. For another, the loss of grain is too high if the machine is used to harvest Indica rice. Furthermore, the machine is rather complicated in structure and too costly for small farmers to purchase. Small combines are suitable only for harvesting rice and wheat, while big Western-type ones are fit for soybeans, sorghum, corn besides rice and wheat. Therefore, the future development of combines should be aimed at multi-purpose uses. Recently, a rice combine has been successfully modified to harvest sorghum by the Taiwan Agricultural Research Institute (TARI) – a highlight showing the direction in this regard.

Growth of Grain Dryer

In order to save a sizable amount of rice from spoilage by rain, several types of grain dryer were introduced from the United States 20 years ago by the Joint Commission on Rural Reconstruction (now CAPD) for testing purposes. However, all the dryers were either too bulky or too expensive with low working capacity for individual farmers to own.

Up until 1970, Taiwan's farmers had suffered a great loss of moist rice because the harvesting time falls on the rainy season. This caused great concern that led to a test of artificial drying. In the meantime, an adoptable grain dryer was developed by TARI. A subsequent extension of dryers was pursued by JCRR in cooperation with local governments. During the mid-1970s, more than ten local manufacturers (now only two) produced different types and sizes of dryers. The accumulated number of grain dryers is shown in **Table 4**.

There are two major types–flat bed and vertical circulation – of grain dryers in Taiwan. According to a survey, their fuel consumption is rather high. It is, therefore, necessary to develop energy-saving and solar energy dryers in the future.

Mechanization vs. Rice Production Cost

By 1978, the extent of mechanization had reached 72% for land

Table 5 Increase of Farm Labor Wages*

Year	NT$	%
1961	35.00	100
1966	41.26	118
1971	70.82	202
1976	193.98	554
1977	213.60	610
1978	254.54	727
1979	298.39	853
1980	383.24	1 095
1981	473.52	1 353

Source: Taiwan Food Bureau
* Excluding meal supply.

preparation, 27% for rice transplanting, 20% for rice harvesting, and 22% for rice drying. Today, it is 95, 91, 80, and 50% respectively. However, there remains much room for improvement. For instance, while mechanization has the effect of labor saving, it often leads to a higher cost of crop production. How to cope with this problem is a big concern.

The present model of mechanized farming is still far from increasing the rate of farm earnings. One of the objectives of mechanization is to make the growth rate of productivity able to counterbalance the increasing rate of farm labor wages that had doubled in 1971 against 1961 and was 13.5 times as high in1981 as in 1961 (**Table 5**). In other words, the sky-high wages calls for better mechanization badly and require more governmental support in many aspects.

Provision of Agricultural Mechanization Loans

The government's support for agricultural mechanization includes providing loans and subsidies for farmers to purchase farm machines, training farmers, upgrading indigenous machine quality, strengthening rural repair service, setting up rice nursery centers, and promoting contract work. Among them, the extension of loans for purchasing agricultural machines is the most effective one.

The Agricultural Mechanization Funding Program started in fiscal year 1973, with loans increased up to NT$3,081,000,000 in fiscal year 1982, almost 20 times in 10 years (**Table 6**).

Table 6 Financial Sources and Loans for Agricultural Mechanization (Unit: NT$ 1,000)

Fiscal year	Cental Gov't Fund	JCRR (now CAPD)	Banks/FAS	Total	Loan Extended
1973	100 000	66 700	109 700	276 400	157 439
1974	100 000	66 700	109 700	276 400	281 513
1975	140 000	116 600	171 066	427 666	680 311
1976	240 000	70 000	265 000	575 000	722 873
1977	297 850	104 000	402 500	805 000	714 855
1978	210 000	100 000	310 000	620 000	693 155
1979	800 000	200 000	249 666	1 249 666	851 433
1980	800 000	200 000	587 482	1 587 482	2 068 504
1981	800 000	200 000	1 098 000	2 098 000	2 098 000
1982	1 000 000	0	2 081 000	3 081 000	3 081 000

Source: Managing Committee on the Agricultural Mechanization Fund.

Review of Agricultural Mechanization Strategies — Problems and Prospects

Development of Versatile Machinery

Taiwan has about 380 000 ha of drylands, of which 250 000 ha are slopelands. They are scattered throughout the island and planted to a large variety of crops. The production cost of dryland crops is relatively high when compared with international market prices. Although the Government provides price support to encourage the planting of dryland food/feed crops, there still exist some problems. The fragmentation of slopes, for instance, defies the use of imported machines which are unsuitable for local farming operations. At present, land preparation for most dryland crops is highly mechanized, while that for sugarcane and tea farming is only moderately mechanized. Therefore, it is imperative that special machines be developed for the cultivation, harvesting and processing of dryland crops.

Hog and poultry farming has been well established in Taiwan. All poultry farms and some pig farms have adopted feeders and automatic feed conveyors because of labor shortages and large-scle operations. Very little has been done to handle animal wastes by machine. Most machines for the animal industry are imported. Some are locally manufactured but do not measure up to required standards. There is urgency to produce more and better quality machines and to improve the techniques of handling wastes. There is a need to develop hay handling and milking machines and to set the minimum requirement of machines and facilities on a dairy farm in order to promote the dairy industry.

The capital investment of Taiwan's fishery industry is about NT$3 billion a year, of which NT$ 1.5 billion is for the local construction of fishing boats, NT$1 billion for the import of marine engines and electronic equipment, and the remainder for the purchase of outboard engines, refrigeration devices, fishing gear, etc. from both domestic and foreign markets.

An estimated 90% of the equipment installed on Taiwan's fishing boats is still imported. It is imperative that energy-saving fishing boats and equipment be locally developed.

Mechanization in forestry started with the import of chainsaws, yarders and tractors. Labor shortage has made it imperative to promote silvicultural mechanization, which cuts costs and raises operational efficiency. Different types of machines have been introduced, but most of them are

heavy and not suitable for small-scale forest management. It is, therefore, imperative that machines adaptable to local conditions be developed and that an integrated labor-saving silviculture, including mechanization, be established.

Domestic Manufacture of Agricultural Machinery

Twenty years ago only pedal rice threshers, hand sprayers, rice milling machines, etc. were locally made. Owing to the progress of manufacturing techniques, such farm machines were later added to the local production list as power tillers and power sprayers. Over the past decade, rice transplanters, rice combines, dryers, auto-trailers and fishing equipment have been widely adopted and most of them are local products. However, tractors, farm gasoline engines and diesel marine engines have yet to be locally manufactured; they need huge investments and their demand is limited.

Among the 50-odd local manufacturers that produce agricultural machinery, 15 are classified as Grade A and 33 as Grade B in regard to quality control. Their annual production is valued at some NT$3 billion. Their major problems are as follows:

1) Most of their factories are small-sized family businesses with limited capital and small market.

2) Research and development is poor for lack of qualified engineers.

3) Larger factories are mostly joint ventures or in technical cooperation with foreign manufacturers, which slows the transfer of technology.

4) Their business is often affected by dumping from abroad.

The Government and the manufacturers should cooperate to cope with these problems.

Performance Tests of Agricultural Machinery

Agricultural machines are required to pass government performance tests in order to become eligible for loans from the Agricultural Mechanization Fund (AMP). Imported machines are tested by a research or inspection organization authorized by the Government. Locally made machines are tested by government agencies or academic institutions commissioned by the Ministry of Economic Affairs (MOEA): (1) The Bureau of Commodity Inspection and Quarantine, MOEA, tests tillers and engines of less than 45 horsepower; (2) The Department of Agricultural Machinery Engineering, National Taiwan University, tests the various kinds of machinery used in crop production, animal husbandry and forestry; and (3) The Marine Engineering Research Center, National Cheng Kung University, tests fishing gear.

Problems to be solved: 1) For lack of qualified personnel and facilities, tests are often conducted on a part-time basis. 2) Only machines that require AMF loans, instead of all kinds of machines, are subject to performance tests. 3) No follow-up checks are made on the performance of those certified types of machines that have been sold.

Therefore, it is urgently necessary to expand the capacity of the performance testing agencies and to establish a permanent performance/test system.

Training of Agricultural Machinery Workers

Lack of qualified research engineers is the bottleneck in the development of agricultural machinery. At present, research and development projects are mainly conducted by the Taiwan Agricultural Research Institute (TARI), seven district agricultural improvement stations (DAIS), and four universities/junior colleges. TARI and the seven DAISs have only about 40 persons working in this field. They are mainly responsible for the testing, demonstration and extension of newly developed machines. However the majority are not agricultural machinery engineers. College professors of agricultural machinery can only spare a part of their time for the development of farm machines. The research and development activities conducted by local machinery manufacturers are negligible because they usually rely on foreign firms for new machine designs, thus ignoring the training of domestic engineers/technicians.

Each year there are about 100 college graduates majoring in agricultural machinery in Taiwan. Regrettably, many of them pursue advanced studies abroad or engage in other professions. How to attract and retain well-trained college graduates to work in the field of agricultural machinery is a problem requiring urgent attention.

Conclusion

Taiwan's agricultural mechanization program started with the introduction of power tillers to replace draft animals, As the development of farm machines for rice culture is so successful that meets the requirement of socio-economic progress, the government has listed the program as one of 12 national development projects. Although rice farming has made significant progress in the past decade, more efficient mechanization is still desired for saving labor and decreasing production costs, and the promotion of overall agri-mechanization through the development of machinery for dryland farming, livestock production, fisheries and forestry also needs to be stepped up. ■■

Status and Scope of Wheat Production in Nigeria

by
O.P. Kataria
Lecturer
Department of Agronomy
Ahmadu Bello University
Zaria, Nigeria

Introduction

Wheat (*Triticum aestivum* L.) is the most extensively grown food crop in the world (237 million ha) and produced in the largest amounts (420 million t). The introduction of wheat to West Africa was probably done by the Arabs during the 12th century. The earliest records of wheat cultivation in Nigeria date from the 18th century in Borno State where it might have come via Sudan and Lake Chad (Lewicki, 1972). Wheat spread remained restricted to the northern parts with its cultivation in small areas (about 500 to 1 000 ha in 1960) along the river banks or on flooded lands (*fadama*) with residual water. Major interest in local wheat production started in 1959 when the Government decided to develop irrigation schemes in the far north (10° – 14°N) of the country.

Wheat Consumption Status

Local wheat being a luxury food is consumed as traditional dishes. The most popular preparations are locally called as *Taliya, Finkaso, Puff-Puff, Chin-Chin, Gurasa* and various other recipes. At present, most of the wheat produced and imported is made into flour for making bread, cakes, biscuits, macaroni and semovita. After the World War II, the returning soldiers contributed to the spread of western food habits and the bread industry received a substantial boost in the South of Nigeria. Wheat flour was imported as early as 1935, and flour imports of over 60 000 t/year dates from 1957. The first flour mill was established in Lagos in 1962 and thereafter most import was that of wheat grains. The trend is continuously on the increase and the imports during the last decade are shown in **Table 1**.

Based on 1969 figures, wheat importation has increased about four-fold in quantity and about eight fold in value by 1976. Levels of bread consumption in Lagos state were as much as 162 g/head/day in 1976 and has continued to increase since. At the present time, bread eating has come to stay as a very important food item in Nigeria. First as an elite food, but with the oil boom which increased the earning power of most people, bread is hawked even in the remotest villages throughout the nation. It had virtually replaced the traditional cake (*Pankasau*) for breakfast because of its convenience in storage and as a ready-to-eat food.

Increasing population, rapid urbanization, rising incomes, changing tastes of people, and cheaper wheat relative to substitute domestic staples such as cassava, yam, millet, sorghum and rice, are the main determinants of the demand for bread. If the rate of growth of the urban population is assumed to be 14% and bread consumption for urban and rural people remains 100 g and 5 g/head/day respectively, it is estimated that total wheat consumption could be about 2.57 million t in 1985. These staggering amounts constitute a very big drain on the country's foreign exchange.

Table 1 Wheat Imports of Nigeria

Year	Quantity (000 t)	Value (₦ million)*
1969	188.2	12.5
1970	265.8	16.0
1971	397.8	23.8
1972	312.5	23.1
1973	304.0	25.0
1974	323.4	51.7
1975	407.5	55.0
1976	732.4	98.2
1977	719.7	96.4

*₦ is Nigerian Nalza equalent to 1.5 U.S. dollar
Source: Nigeria Trade Summary (1969-77), Federal office of Statistics, Lagos, Nigeria

Wheat Production Status

Non-irrigated or flood land (*fadama*) wheat production is mainly found in the Hadejia River valleys. Before the Tiga Dam be-

come operational, peak seasonal flooding in the Kano-Hadejia river used to cover large tracts of land near Ringim and beyond Hadejia which enabled 400 – 800 ha of wheat to be grown on residual moisture after the water receded (William *et al* 1976). The areas of *fadama* land have also been reduced in Rima valley due to irrigation schemes. A very large proportion of the total potential 1 000 ha of *fadama* land for wheat may be incorporated in the new irrigation developments of Ringim, Goronyo and beyond Hadejia leaving perhaps less than 100 ha.

Rainfed wheat does not appear promising because of very low yields that are not renumerative as compared to yields of alternative crops like sorghum, maize and rice (Olugbemi *et al.* 1979).

The bulk of wheat grown now in the country is mainly on irrigated land. The main growing states presently are Borno, Kano, Sokoto and Kaduna where the major irrigation schemes are located. The area under wheat cultivation is above 6 000 ha, yielding on an average about 1.5 to 2 t/ha. At present, the total production of wheat is about 15 000 t which is equivalent to about 1.5% of the country's need. Nigeria's current annual wheat needs are in excess of 950 000 t.

From the consumption and production status, it is obvious that these is a big gap between demand and supply of wheat in Nigeria. Challenge stands for both government as well as farmers to bridge this gap. The government should do the expansion of irrigation schemes so that more irrigated land can be put under wheat, and farmers should adopt the improved cultural practices to boost the wheat yields per unit of land and per unit of water available.

Scope of Wheat Production

The agricultural scientists first and the government next must realize that if the people of this nation are to be fed, the food will have to come from its soil and its farm economy and not bartered for oil resources. The production per unit area can be doubled if the available research findings are judiciously used in various agro-climatic regions of the country. This article discribes the scope of wheat production in Nigeria with the aim of attaining self-sufficiency in food with the improved technology which is the concern of all citizens.

Adaptation: (Area and Season Identified)

Wheat, a temperate grass, was originally confined to the cooler parts of the world. Gradually, several varieties have been developed until wheat has become an important crop in the sub-tropics and semi-arid regions. In Nigeria, wheat growing areas and season have been identified. Wheat is grown between latitude 10° to 14° North, mainly, the Sudan and Sahel Savanna zones (**Fig. 1**). The main areas suitable for wheat cultivation include Hadejia, Kano and Kadawa (Kano State), Tunfafia, Bakura, Wurno (Sokoto State), Gambaru and Yo (Borno State), and Dabiram and Samaru (Kaduna State). The soils of these areas also range from light (loamy-sand) to medium textured (clay-loam). Wheat is grown almost entirely under irrigation during the *harmattan* period (November to February) when night temperatures are low enough for adequate tillering. The factor which prevents the extension of the crop southward in Nigeria is temperature. According to Kowal and Knab (1972) south of latitutde 10°N, between November and February maximum temperatures are consistently above 32.5°C and minimum temperatures are mostly above 15°C. These temperatures reduce the length of growing season and yield potentials.

The zone designated as very suitable for wheat consistently has the major part of the November-February period with maximum temperatures below 32.5°C (70-115 days) and minimum below 15°C (80-95 days).

The Jos and Mambilla Plateau areas meet temperature requirements as a result of their high elevation, but with limited irrigation potential they are not expected to be producing wheat. Attempts were made to grow wheat as a rainfed crop during the wet season on Mambilla and Jos plateau at the

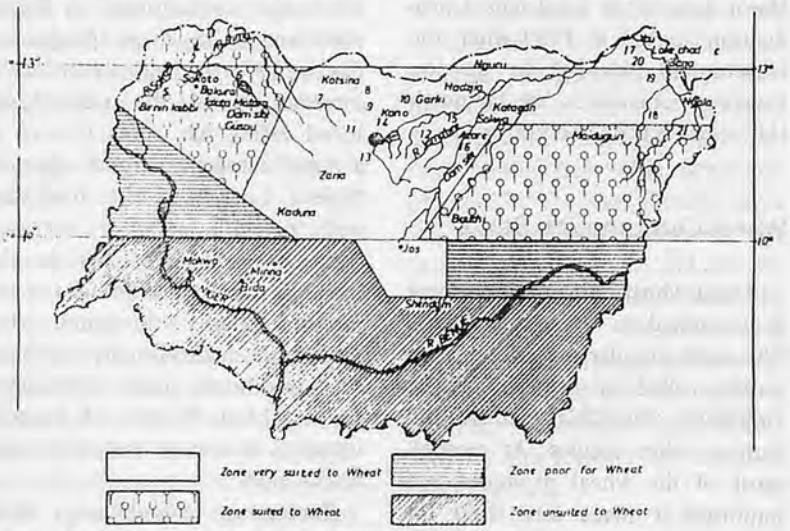

Fig. 1 Climatic zones for wheat in Nigeria and Irrigation Schemes.

altitudes of 1 675 and 1 285 m, respectively. Grain yields at Jos and Mambilla were low ranging from 260-1 179 kg/ha compared to a dry season crop yielding 1 500-3 000 kg/ha or more at Kadawa (Olugbemi *et al* 1979). Fungal infection of seeds and unfavourable weather conditions were thought to be the primary factors involved in grain weathering and reduced yields.

Irrigation Resources

Irrigation is an essential input for wheat growing. Out of the 11 river basin development authorities only three, namely; Chad Basin Development Authority (CBDA), Hadejia-Jama'are River Basin Development Authority (HJRBDA), and Sokoto Rima Basin Development Authority (SRBDA) are situated in the wheat growing zones. Since wheat is grown during the dry periods, the river basin development authorities ensure that irrigation water is available at all times and at optimum amounts. The projected irrigation schemes that will grow wheat are shown in **Table 2**.

Sokoto State is climatically warmer than the central and eastern regions of northern Nigeria. Therefore, it is anticipated that only 25% of the net irrigable areas in the dry season will be devoted to wheat. The HJRBDA and CBDA together will be providing 80% of the area devoted to irrigated wheat upon completion of the irrigation schemes in 1990. Thus, about 164 000 ha of land will be under wheat cultivation by 1990 (**Table 2**). Assuming an average yield of 2 t/ha, as at present, a total wheat production of 328 000 t/year will be achieved in about 9 years from now.

High Yielding Varieties

One of the most important contribution of the Plant Breeding Section of Institute for Agricultural Research has been the development/selection of high yielding varieties for new wheat areas. Obviously, this has been accomplished by engineering the growth cycle of the varieties to suit better the available growing season. The first recommendation of wheat varieties was made in 1965 when Toussen was approved for its high grain yield and Florence Aurore - 8 193 for its grain quality. About 1 000 new lines are now being received annually from FAO, CIMMYT and ALAD-FF for screening. After many years of intensive work Mexican varieties Sonora 63 and [(lee x N10-B) GB-55] GB-56 were approved as high yielders and recommended for cultivation. Their yield potential is 3 000-4 000 kg/ha of grain with 11-12% protein content.

In 1975, many more promising lines and varieties were released for cultivation. These include Siete Cerros, Inia 66, Indus 66, Super X, Anza, 301 x Son 64-Pi 62, and VQ-105. These, being semi-dwarf, are resistant to lodging, more responsive to fertilization and irrigation, and being photo-insensitive are early maturing. Under northern Nigerian conditions, these varieties could produce at least 4 000 kg/ha grain of 11.6-12.9% protein content, if planted at the right time and the recommended agronomic practices followed. Nigerian regional wheat trials harvested in 1978 showed Indus 66 to have the highest yield of 5 055.8 kg/ha out of all the varieties tested so far. Other varieties compared favourably with Indus 66 were Jupateco 76 (4 929.9 kg/ha), B6 832-5-5 x Cnox Jar (4 869.4 kg/ha), Inia 66 (4 750.1 kg/ha) and Siete Cerros (4 705.4 kg/ha).

Presently the activities on wheat have been concentrated on screeening of lines/varieties for bread-making qualities, resistance to diseases and lodging, heat tolerance, and responsiveness to fertilization.

Wheat Yield Potential

Like any other cereal crop, the yield potential of wheat can be formulated as:

Grain yield in tons =
No. of spikes/m^2 x No. of grains/spike x average weight/grain (based on 1 000-grain weight) x 10 000.

The number of spikes produced per unit area depends upon seed rate, seeding method and other crop husbandry practices. The num-

Table 2 Irrigation Schemes and Projected Areas in Wheat Growing Zones (Anon. 1979)

Scheme	Admin./ Authority	Year of completion	Projected area (ha)	Percentage of area for wheat
Wurno	MNR, Sokoto	1965	600	25
Tungun Tudu	MNR, Sokoto	1963	100	25
Kalmalo	MNR, Sokoto	1981	800	25
Kardi	MNR, Sokoto	1983	800	25
Bakalori	S.R.B.D.A.	1982	30 000	25
Karaduwa	S.R.B.D.A.	1986	6 000	25
Goronyo	S.R.B.D.A.	1986	11 200	25
Gari River	MANR, Kano	1982	6 400	50
Tomas River	MANR, Kano	1980	2 600	50
Jakara River	MANR, Kano	1983	2 000	50
Watari River	MANR, Kano	1987	4 500	50
Various Minor Schemes I	MANR, Kano	1985	250	50
Kano River Phase I	H.J.R.B.D.A.	1982	22 000	60
Kano River Phase II	H.J.R.B.D.A.	1986	24 000	60
Hadejia Basin	H.J.R.B.D.A.	1982	12 000	60
Jama'are Basin	H.J.R.B.D.A.	1990	60 000	60
Ya Borno	MNR Borno	1965	1 000	50
Scip	C.B.D.A.	1984	66 800	60
Kironowa Polder	C.B.D.A.	1982	22 243	60
Baga Polder	C.B.D.A.	1982	20 243	60
Yedsiram	C.B.D.A.	1989	53 800	30

Total Irrigated area = 345 336 ha
Net area under wheat = 164 000 ha

ber of grains/spike and their 1 000-grain weight vary with the variety and planting time.

In order to obtain a target grain yield of 4 t/ha we need:

i) 100 plants/m² (or a spacing of 100 cm²/plant)
ii) 2 effective tillers/plant
iii) 40 grains/spike
iv) Grain weight of 0.035 grams

The varieties like Indus 66, Inia 66, and Siete Cerros normally produce 40 grains/spike with 1 000-grain weight of 35 grams. A population of 100 plants/m² might be achieved by using a spacing of 20 x 5 cm and in a normal year it is not difficult to have at least two effective tillers per main shoot. A target yield of 4 t/ha may be achieved in the wheat growing zones of the country if high yielding varieties are grown under the following management practices.

Management Practices and Research Contributions

Sowing Time

The sowing date affects wheat yield by influencing the germination, tillering, number of spikelets per head, number of fertile florets per spikelet, grain weight per spike, 1 000-grain weight, and the number of ear heads matured per unit area at a constant seed rate (Vijay Kumar and Yayock, 1980). Sowing earlier or later than a certain date adversely affects all these parameters and hence the grain yield. From the results obtained at the Irrigation Research Station (IRS), Ngala in the 1975-76 season and that subsequently obtained in trials at IRS, Kadawa and Bakura, and state experimental stations, it is concluded that sowing should be timed so as to avoid high temperatures at the beginning or end of the growing season. At the major irrigation schemes in the wheat growing areas of the country, where temperature regime is similar, the most suitable range of sowing date is the month of November, with an optimum time as the middle of that month.

Table 3 Influence of Seed Rate on Wheat Yield

Seed rate (kg/ha)	Tiller/m²	Tillers/ plant	Spikelet per Spike	Grain wt. per spike (g)	Grain yield (kg/ha)
50	357	3.5	18.8	1.49	2 984
100	454	2.3	18.2	1.33	3 832
150	504	1.8	17.3	1.25	3 819
SE. ±	56.6	0.28	0.54	0.13	276.1

Source: Progress Report on Irrigation Crop Research Programme 1979-80 I.A.R., A.B.U. Zaria, Nigeria.

Sowing Method

Wheat can be seeded either by drilling or broadcasting. The former produces uniform stand and earlier emergence under relatively sub-optimal soil moisture conditions. According to Palmer (1976) the drilling method out – yielded the broadcasting method in 1973-74 but in 1974-75 season, there was no significant yield difference between these methods. A thorough burying of seeds by ranking is essential in the broadcasting method. However, drilling in rows ensures good germination and effective hoe-weeding in the standing wheat fields.

Seeding Rate

The rate of seeding determines the plant population that makes use of the soil pool (water and nutrients), light, and space and eventually affects the yield of wheat. The amount of seed sown per hectare must be adjusted according to the test weight (1 000-grain weight) of each variety if the same number of plants per hectare is required. However, the best seed rate for each variety depend on characters such as tillering capacity, soil type, and environmental conditions. Palmer (1981) reported the best seed rate for timely sown wheat as 100 kg/ha.

At a high seed rate, competition for space is high and few tillers/plant are produced. The number of spikelets/spike and grain weight per spike were found to decrease with increasing seed rates (**Table 3**). At low seed rates, there is less competition and so the number of effective tillers/plant will be high but the yield remains still low because of few spikes per unit area.

Adjusting Seed Rate with Time of Planting

Wheat sown in November gives the highest grain yields. Sowing wheat in October and late in December reduces yield attributes and, ultimately, grain yield. December sowing gives higher wheat yield as compared to October sowing. Therefore, delayed sowing to December may be recommended rather than early sowing in October if sowing could not be completed in November. The optimum seed rate for November planting is 100 kg/ha (**Table 3**) but the research work concluded by Ubi (1981) suggests a high seed rate of 150 kg/ha when planting is done early in October or late in December (**Table 4**). This high seed rate in early or late plantings compensate the yield losses to some extent.

Table 4 Relationship of Sowing Date and Seed Rate on Wheat Grain Yield, 1980-81

Sowing Date	Seed Rate (kg/ha)		
	50	100	150
20th October	1 750	2 385	2 763
10th November	3 690	4 453	4 911
30th November	3 976	4 313	4 818
20th October	2 879	3 253	3 554
L.S.D. (P=0.05)		79	

Source: jbi, 1981.

Fertilizer Use

The use of fertilizer in adequate amount and at the proper time increases the grain yield of wheat. Nutrient uptake by an average

wheat crop is 92 kg N, 44 kg P_2O_5, and 75 kg K_2O/ha. Since wheat is a shallow rooted crop, a major proportion of the nutrients is drawn from the top few inches of the soil. Balasubramanian and Singh (1979) carried out fertilizer trials throughout the wheat growing areas and summarized their finding as follows:

- Apply 100 kg N and 45 kg P_2O_5/ha for all the soils. Sandy soils are deficient in Potash and need 30 kg K_2O/ha in addition to N and P.
- Progressive farmers with high levels of management may apply up to 160 kg N/ha together with appropriate levels of P and K.
- Use urea for N, single superphosphate for P_2O_5 and nutriate of potash for K_2O. A compound fertilizer for all the three nutrients can be used, e.g. 20:10:0 or 20:10:10 compound.
- Apply P and K prior to planting and disc it into the soil. Nitrogen can be applied as a single dose prior to planting in all the soils except the sandy ones. For the sandy soils, two split applications of N at planting and 3 to 4 weeks later is suggested in order to obtain high yields.
- All applied fertilizers should be well incorporated into the soil immediately after application. In areas where mechanized wheat cultivation is practised, fertilizer and seed can be drilled in one operation using a seed-cum-fertilizer drill. The fertilizer is placed 3-4 cm deeper than the seeds.

Water Management

During the wheat growing season, there is practically no rains to support the crop. An average of 3.75 mm water per day is lost through evapotranspiration during the crop growing season. This warrants the need for regular irrigations. The heavy textured soils as that of Chad Basin hold relatively higher amount of water as compared with the light textured soil of Sokoto Rima Basin. Sandy soils, therefore, should be irrigated more frequently than clay soils.

Table 5 reveals that there is a reduction in grain yield with 14 days interval compared to 7 days interval at Kadawa and 10 days interval compared to 5 days interval at Bakura. Light irrigation at weekly interval is necessary for the first three weeks and irrigation afterwards depend upon the moisture holding capacity of the soil in main root zone of 10-20 cm. Five cm of water can be applied every 7 to 15 days depending on the soil type and amount of water available. In general, for light soils the more the frequency of irrigation the better it is, but in heavy soils the frequency of irrigation can be reduced. Irrigation interval of 4 to 5 days on sandy loam soil of Bakolori project and 7-8 days interval on medium to heavy soils to Kano and Borno States are suggested to be conducive to highest grain yields. Any moisture stress between 46-66 days after sowing (at flowering stage) brings drastic reductions in grain number and grain weight per spike that results in low grain yields.

Three methods of irrigation are prevalent in the country: borders-check, basin, and sprinkler irrigation. The latter is too expensive in establishment and maintenance and as such is not common with the farmers. In the borders-check irrigation method the field may be laid out in strips of 2.5 to 6 m wide and 100 m or more long, with an optimum slope of 0.1% (never exceeding 0.5%). Where land levelling is poor, or farm units are small and irregular the field may be laid out for basin irrigation. The size of the basin may range from 2 m x 2 m to 5 m x 5 m, or even more depending upon the field level and soil type. Crop yields are higher and water management is better in basin irrigation as compared with border-check method (**Table 6**).

Table 5 Wheat Response to Irrigation Interval

Treatment	Grain Yield (kg/ha)	Number of Irrigation	Depth of Water Applied (cm)
Kadawa Station (Kano)			
a. 1978/79			
Irrigation once in 7 days	4 423	15	75
Irrigation once in 14 days	3 723	8	40
L.S.D. (P = 0.05)	432		
b. 1979/80			
Irrigation once in 7 days	4 042	16	80
Irrigation once in 14 days	3 242	9	45
L.S.D. (P = 0.05)	348		
Bakura Station (Sokoto)			
a. 1978/79			
Irrigation once in 5 days	2 000	19	89
Irrigation once in 10 days	1 206	13	59
L.S.D. (P = 0.05)	617		
b. 1979/80			
Irrigation once in 5 days	2 971	19	89
Irrigation once in 10 days	1 574	11	46
L.S.D. (P = 0.05)	312		

Source: Proceedings 4th NAFPP Workshop, A.B.U. Zaria, Nigeria 1980.

Table 6 Wheat Grain Yield Under Different Irrigation Methods

Method	Irrigation Interval (kg/ha)		S.E. of Treatment Mean
	One week	Two weeks	
Basins	3 750	1 940	220
Border-check	3 140	1 390	300

Source: Palmer, 1976.

Weed Control

Wheat is still a new crop in most fields at various irrigation sites. The time of planting of irrigated wheat does not coincide with the optimum period of weed seed germination and growth. As a result wheat does not suffer from early weed challenge under normal circumstances. Weeds start emerging as the season warms up in February and remain green at wheat harvest. Higher moisture content of weeds create great problems in mechanical harvesting and threshing of crop. Burning has been observed in combines at Kadawa if weed moisture exceed 40%. Major infestation is that of broadleaf weeds, specially the *Solanum nigrum* and *Amaranthus spp.* One hoe-weeding is adequate for effective weed control in wheat. However, highest yield and maximum net returns were obtained with post-emergence application of chlortoluron at 0.4 kg/ha (**Table 7**).

Table 7 Promising Weed Control Treatments in Wheat at Kadawa.

Treatments	Rate (kg a.i./ha)	Grain Yield (kg/ha)	Increase over unweeded (kg/ha)	Cost of Weed Control (₦/ha)	Net profit (₦/ha)
Chlorbromuron	0.50	3 133	335	15.20	68.55
Chlorbromuron	1.00	3 263	405	18.80	97.45
Chlortoluron	0.40	3 673	875	20.10	198.65
Chlortoluron	0.80	3 324	526	28.50	103.00
Terbutryne	0.50	3 419	621	19.60	135.65
Terbutryne	0.75	3 182	385	23.60	72.40
Hoe Weeding Once		3 182	638	44.80	114.70
Weedy Check	–	3 436	–	–	–

Wheat produce valued at ₦25.00 per 100 kg of grain

Source: Kataria, 1981.

Harvesting and Threshing

Wheat may be harvested at 15% grain moisture. Harvesting the crop with combine harvester avoids the dust and stone pieces. Otherwise the crop is harvested with sickle and are tied into sheaves for threshing. As soon as the sheaves are quite dry they are threshed on platform or floor to avoid mixing stone pieces. The grains are winnowed carefully to separate the grains from the chaffs. The grains are stored in clean sacks at a dry place. Insect infection usually comes from old sacks. Rats also attack the stored wheat grains.

Conclusion

Nigeria's current annual wheat needs are in excess of 950 000 t. The present production is about 15 000 t which is equivalent to about 1.5% of the nation's need. Therefore, challenge stands for both government as well as farmers. The government is committed to the completion of projected irrigation schemes (**Table 2**). Research work in progress on varieties evaluation, efficient water management and development of suitable production technology, as discussed earlier, may help to increase the wheat production per unit area. It is estimated that with adequate water application and good management practices, and experience in wheat cultivation, farmers yield could exceed 4 t/ha (Anonymous 1979) and therefore, there is scope to boost the wheat production to a tune of 656 000 t/year by 1990.

REFERENCES

1. Anonymous 1979. Report on wheat Production and Marketing in Nigeria. AERLS, ABU., Zaria, Nigeria.
2. Balasubramanian, V. and L. Singh. 1979. Fertilizer trial at Kadawa, Kaduna, Hadejia and Bakura. In history and status of wheat research in Nigeria. Samaru Miscellaneous Paper 85.
3. Kataria, O.P. 1981. Weed Control in Irrigated wheat. Irrigation Cropping Scheme Meeting, IAR., ABU. Zaria, Nigeria. pp. 83-85.
4. Kowal, J.M. and D.T. Knabe, 1972. An Agro-Climatological Atlas of the Northern States of Nigeria. ABU. Press, Zaria, Nigeria.
5. Lewicki, L. 1971. West African food in Middle Ages according to Arab sources C.V.P.
6. Olugbemi, L.B., 1973. Wheat Research in Nigeria. Proc. of the 4th FOA/Rockefeller foundation, wheat seminar, Tehran, Iran. pp. 92-96.
7. Olugbemi, L.B., R. Redden, and E.V. Aguda, 1979. Variety Screening. In history and status of wheat research in Nigeria. Samaru Miscellaneous Paper 85.
8. Palmer, J.L. 1976. Annual Report for 1975-76. Irrigation Research Station, Ngala, Nigeria.
9. Palmer, J.L. 1981. Wheat Sowing Date Trial. Progress Report on Irrigation Research Programme 1980-81, IAR., ABU, Zaria, Nigeria. pp. 77-80.
10. Ubi, E.O. 1981. The effect of sowing date and seeding rate on yield and yield components of irrigated wheat cultivars at Kadawa, Nigeria. M.Sc. Thesis at Dept. of Agronomy ABU, Zaria, Nigeria.
11. Vijay Kumar and J.Y. Yayock, 1980. Growth Stages and productivity of wheat at two dates of planting at Samaru. Prod. 7th National Irrigation Seminar. Institute for Agricultural Extension, Research and Liaison Service, ABU., Zaria, Nigeria. pp. 13.
12. Williams, L.B., R.J. Redden, and T.W. Halitu 1976. Wheat produces and production in Kano State. NAFPP Bench mark survey for wheat presented to F.D.A. Lagos, Nigeria. 1977.

AGRITECH '83 - International Agricultural Exhibition
Oct. 3-6, 1983, Tel Aviv/Israel

The biennial exhibition hailed by the professional world as a major international agricultural event. For 18 years, Agritech has been the focal point for developments in sophisticated agronomy. More than 120,000 visitors from 70 countries are expected at Agritech '83, where over 500 exhibits from 50 countries will be displayed.

At Agritech '83, agriculture's most modern technology and world-renowned developments by top Israeli experts are yours to see and experience. Everything from the most advanced achievements to know-how for high-yield production to the special technology for progress will be on display, showing their practical application on location.

Agritech '83 exhibits cover all branches of agriculture: Farm Machinery/Irrigation Equipment and Systems/Livestock and Poultry Equipment/Agrochemicals and Veterinary Products/Horticulture and Seeds/Agro-Industry and Know-how/Computerized Systems and Research/Agricultural Construction and Transportation.

Schedule of Events: In addition to the exhibits and displays, visitors can attend practical on-site demonstrations. Participants are invited to take part in professional tours and seminars.

Professional Symposiums: Agritech '83 includes numerous professional symposiums and seminars on a wide range of topics, among them:

The 3rd International Conference on Irrigation – A. Planning and Operation of Irrigation Systems, B. Chemigation.

Seminar on Plant Protection Organizing Committee - Mr. Rafi Glick P.O.Box 50084, 61500 Tel Aviv, Israel.

Kubota has Introduced a New Reaper

This reaper is manufactured by Kubota, Ltd. to cope with the local conditions in Southeast Asia based on the research made by the Kubota Asian Agricultural Institute, established in May, 1955 in the vicinity of Bangkok.

It is now exported to the paddy and wheat growing areas in the Southeast Asian countries.

Model AR 120 reaper at work in Indonisia

[Features]
High working capacity, Low grain loss, Adjustable cutting height, Easy operation, Uniform and clean windrows.

[Specification]
Dimensions: (L x W x H) 2 390 x 1 470 x 900 mm, Weight: 116 kg, Working capacity: 3-4 h/ha, Applicable plant height: 60-120 cm, Engine: 4 cycle, air-cooled, Continuous output–2.3 PS/1 800 rpm, Fuel consumption–330 g/PS/h, Travel speed–Forward 59.0 m/min, Reverse–50.5 m/min. Cutting: Height–Adjustable, 10-30 cm, Width–120 cm.

American Society of Agricultural Engineers 1983 Summer Meeting
June 26-29, 1983, Bozeman/U.S.A.

The meeting was held at the Montana State University attended by 2221 participants. Bill L. Harriott, R&D Consultant, Sunnyvale, Calif., has been elected 1983 president of the ASAE.

Meeting theme: Energy, environment and food – three of U.S.A.'s most valuable resources – are interdependent. Agricultural engineers cannot advance one of the them without weighing the implications on the other two.

This meeting addressed these concerns. New energy sources from agricultural materials and efficient utilization of existing energy are emphasized. The protection of soil, the conservation of water and the restoration of disturbed lands are highlighted. All are examined for their role in increasing the quality of food and fibre for the world's population.

Meeting features: 400 technical presentations in 75 half-day technical sessions and more than 200

technical committee and subcommittee meetings.

General session: "Robotics: Its Opportunity and Limitations".

The 1983 Kishida International Award Recipient

Byron L. Bondurant, assistant chairman, Department of Agricultural Engineering, Ohio State University, has been awarded the 1983 Kishida International Award by the American Society of Agricultural Engineers (ASAE).

The award was presented during the Society's 1983 Summer Meeting, June 26-29, at Montana State University, Bozeman.

Bondurant received the Kishida International Award this year for his many years of professional work and counsel for institutions in India and Africa. He was instrumental in developing agricultural engineering education programs that have become important sources of trained agricultural engineers in those countries.

Award given to Prof. B.L. boundurant

Since 1962, Bondurant has held several teaching and consulting assignments in Africa and India, representing the U.S. government and the Institute of International Education. In India, he served as dean of the College of Agricultural Engineering and, later, as consultant to the permanent dean of Punjab Agricultural University. In Africa, he was associated with the University of Nairobi, Kenya, and the Agricultural Research Institute, Somalia.

He began his career in agricultural engineering in 1949 as a district extension agricultural engineer at Cornell University, Ithaca, New York. He taught agricultural engineering at the University of Connecticut, the University of Delaware and the University of Maine, where he was head of the Agricultural Engineering Department from 1954 to 1964.

In 1964, he joined Ohio State University, where he is currently professor of agricultural engineering, extension agricultural engineer, and assistant department chairman.

International Conference on Robotics and Intelligent Machines in Agriculture

Oct. 2-4, 1983, Curtis Hixon Hall, Tampa, Florida, U.S.A.

This conference is sponsored by: Agricultural Engineering Department, IFAS Institute of Food and Agricultural Sciences, Center for Intelligent Machines and Robotics, University of Florida and American Society of Agricultural Engineers (T-3, Instrumentation and Controls Committee), City of Tampa, Florida.

The International Conference on Robotics and Intelligent Machines in Agriculture is intened to review current applications and research and to project future applications of this emerging technology to agriculture. Reports on the most active research programs on the application of robotics to agriculture and on some of the most significant sensing systems is being presented by engineers from Australia, Japan, England and the U.S. The conference is being held in conjuction with four other conferences on precision robots, automation financing, education for automation, and marketing of robots. These conferences and an exhibition of robots, computers, CAD/CAM systems and software, robot sensory systems and software makeup ROBOTECH '83.

For information contact:
ROBOTICS
Director of Conferences, IFAS
1041 McCarty Hall, University of FL
Gainesville, Florida 32611, U.S.A.

Saudi Agriculture '83

April 10-14, 1983, Riyadh/Saudi Arabia

Contributed by Dr. Amir Bakheit Saeed

The Second Saudi International Exhibition for Agriculture, Irrigation and Agri-industry show opened its doors to the public at the Al-Dhiafa Exhibition Center, Riyadh, the same place where the first Saudi International Exhibition took place, also in April last year.

The show provided again the manufacturers and suppliers of agricultural and related products, equipment and services a unique opportunity to assess the expanding

market of the Kingdom of Saudi Arabia. The Kingdom commitment to the expansion of its food production programme is highlighted in its third Five-Years Development Plan (1980-1985) in which an investment of US$2.4 billion for agricultural development has been allocated. Added to this is a substantial allocation of funds for the provision of major irrigation projects.

While aiming to provide a means for enhancing Saudi Arabian agribusiness, the show also attracted officials and businessmen from neighbouring countries which are similarly pushing their agriculture towards self-sufficiency. The participating exhibitors and the size of their contribution reflected the importance of the Saudi market to the world.

About 200 companies participated in the Exhibition, representing 19 countries (Saudi Arabia itself being one of them). Five Japanese companies were represented; Nagata, Kubota, Honda, Kobe Trading, and Yanmar Diesel (see figures). Almost all exhibitors showed the latest technology to make farming more efficient, productive, and profitable. It was rather apparent that most of the exhibitors who had launched their products at the Riyadh show would later present their exhibits during the forthcoming Agro-Gulf '83 Exhibition and Conference to be held in Abu-Dabi – the Capital of United Arab Emerates, during the period 2-7 Oct., 1983. ■■

BOOK REVIEW

Synopses of Doctoral Theses (India)

The Department of Agricultural Engineering was established at the Indian Institute of Technology, Kharagpur, in 1952. Of the five Indian institutes of technology, this is the only Institute offering teaching programmes from the B. Tech. to the doctoral level in agricultural engineering. In fact, this department was the first in India to initiate a four-year course in agricultural engineering with a strong core curriculum in the sciences and humanities during the first two years. The first Ph. D. s in agricultural sciences and Agricultural engineering were awarded in 1959 and 1965 respectively. For the last twenty years the department of agricultural engineering has been providing leadership in agricultural engineering education and research in the country. To date 86 candidates have received doctoral degrees in different branches of agricultural sciences and agricultural engineering.

These synopses of all the doctoral theses accepted by Institute till to date, is published on the occasion of the Sixteenth Annual Convention of the Indian Society of Agricultural Engineers in December, 1978.

The contents are divided into 8 sections as follows: Crop process engineering, Dairy and food engineering, Farm machinery and power, Soil and water conservation engineering, Agronomy, Applied botany, Food Science, Soil science.

Size: 28.4 x 22.5 cm, 115pp

Published by Agricultural Engineering Dept., Rice Process Engineering Centre, Indian Institute of Technology
Kharagpur 721302, India

Farm Mechanization in Asia (Japan)

It is often said that farm mechanization in Asia is an idea whose time has come in that it is a harbinger of greater agricultural productivity. In reality, however, the desirability or success of farm mechanization is a function of a particular country's prevailing social, economic and agricultural conditions, among other considerations. Its success is also determined by how well the pattern of mechanization is adapted to those conditions.

It is in this context that the participants and resource speakers in the APO Symposium on Farm Mechanization held in Tokyo from 24th to 30th November, 1981 examined the farm mechanization issue: its performance over the last decade or so, its problems and constraints and its outlook in the years ahead. The findings of their deliberations are summarized in the present volume which also incorporates the regional reports on the preceding survey on the same subject, technical papers of the resource speakers and the country reports of the participants most of whom also served as correspondents for the survey.

Size: 21.3 x 13.8 cm, 510pp

Published by Asian Productivity Organization
Tokyo 107, Japan

Proceedings of the International Agricultural Machinery Workshop, 1978 (Philippines)

Agricultural mechanization can play a vital role in helping small farmers increase their total food production. Its primary goal is to encourage timeliness of operations that will permit small farmers to take advantage of the potential of modern varieties and of crop intensification.

Both national research organizations and IRRI have developed rices that produce in 100 to 110 days a grain yield equal to or greater than that of traditional rice varieties requireing 130 to 150 days. When this grain of 30 to 40 days due to shortened growth duration is coupled with mechanization, which can reduce turnaround time from about 4 weeks to as little as 1 week, time for growing an additional crop is available.

This Industrial Extension Workshop was convened at IRRI to discuss the results of an intensified technology transfer effort initiated in 1974 and to suggest means for improving the program. Agricultural engineers, manufacturers, and scientists from 16 countries with a broad range of interest in manufacturing, engineering research and development, and the economic and sociological aspects of farm mechanization participated in the deliberations. Along with the broad consensus that industrial extension is an indispensable element in the IRRI small farm machinery development program, specific recommendations to improve the delivery system were made. Several recommendations were subsequently incorporated into the extension activities of the IRRI program.

In workshop discussions, significant differences were noted in the level and composition of mechanization in different nations and in the means available to translate basic design information into viable, low-cost, locally produced machines which are widely accepted by

farmers. Strengthening of national insititutions and expanding the capabilities for research and development of agricultural machinery for small-scale farmers and for extension of the technology to the local manufacturing sector in those countries participating in the small machinery network were identified as priority areas. A clearer set of guidelines was also developed to direct the efforts of the IRRI farm machinery program and national institutions.

Size: 22.7 x 15cm, 203pp

Papercover, Price US$2.50 + Postage US$1.25

Published by the International Rice Research Institute, P.O.Box 933, Manila, Philippines.

Technical Handbook for the Paddy Rice Postharvest Industry in Developing Countries

(Philippines)

Increases in rice productiion since 1960 have helped many developing countries keep food production above the rate of population growth. But "second generation" losses – those associated with postharvest drying, processing, and storage – may amount to about 7% of total rice production, and may reach as high as 26%. Several international aid agencies and developing countries have mounted programs to reduce postharvest losses.

Although there is a need for continuing research and development in the postharvest industry, a wealth of technology exists that, if applied now, could reduce postharvest losses substantially. James Wimberly has compiled the fragmented information and combined it with his own experience into a clear, comprehensive, and cohesive work that explains rice handling, transport, drying, cleaning, storage, parboiling, and milling. For each postharvest step, Wimberly discusses not only appropriate equipment, but also performance and design criteria.

This publication is not meant to be an engineering textbook. Rather, it spells out the engineering principles that design engineers, manufacturers, construction personnel, and technicians should consider in the design and operation of paddy processing facilities in developing countries. The performance criteria will enable designers and operators to specify the right equipment based on the volumes of paddy they expect to handle.

By adhering to the principles the author presents, those engaged in the postharvest industry can help ensure that more of production reaches the consumer without deterioration in quality. The handbook is written for and directed to the paddy rice industry. Much of the information, however, may be applicable to other grains.

Size: 17.7 x 22.8 cm, 200pp

Paperback, Price for developing nations: US$3.50+Postage US$1.25

Published by the International Rice Research Institute, P.O. Box 933, Manila, Philippines

---

Six Simple Pumps: A Construction Guide

(U.S.A.)

Compiled and edited by Margaret Crouch

The handsomely illustrated, softcover guide presents in detail the designs of six simple pumps (original line drawings by artist Christopher Schmidt) that are relatively cheap and easy to build and maintain. The designs offer people in developing countries practical alternatives to more expensive pumps. Several of the designs also could be used in small manufacturing enterprises.

Because they must be primed and otherwise cannot be sealed, most of the pumps and water-lifting devices presented in the manual are primarily for irrigation. However, two of the systems could be used in sanitary wells for potable water supply systems.

The six designs are:

1. A hand-operated diaphragm pump originally developed in Vietnam in the early 1960's.
2. A pitcher pump, a variation of the piston-type handpump used for centuries in many parts of the world.
3. Spangler pumps, separate designs for shallow wells and deep wells, both using durable polyvinyl-chloride pipe.
4. Inertia pump with just three moving parts. The entire pump moves up and down, not working parts inside.
5. Animal-driven chain pump using salvage auto parts, scrap metal, and heavy lumber, originally developed in Chad.
6. Archimedes screw, a simple variation of the traditional water-lifting device used in Egypt and other countries.

Price: US$6.95 (paperbound)

Postage: $1.75 surface mail

Published by Volunteers in Technical Assistance; 1815 North Lynn Street, Suite 200, Arlington, Virginia 22209, USA. ■■

Co-operating Editors

Van Lancker G B Hanna A Kandiah K P Srivastava D. B. Ampratwun M S Chaudhry M S Choudhury J P Mittal E U Odigboh N G Kuyembeh

A H Abdoun M A Bedri A. B. Saeed W T Weerakoon I de A Nääs A L Phillips A A Valenzuela A H Mirdha M R Goyal W J Chancellor

— AFRICA —

Julien G. Van Lancker
Professor Visitor (Agricultural Engineering), University of Brundi, Brundi

George B. Hanna
Chairman, Agricultural Engineering Dept., College of Agriculture, Cairo University, Giza, Cairo, Egypt.

Arumugam Kandiah
Institute of Agricultural Research, P.O. Box 2003, Addis Ababa, Ethiopia

Krishna Prakash Srivastava
Head of the Department of Agricultural Engineering College of Agriculture, Addis Ababa University, P.O.Box 138, Dire Dawa, Ethiopia

David Boakye Ampratwum
Part-Time Lecturer, Agricultural and Food Engineering, University of Ghana, Legon, Ghana

Muhammad Siddique Chaudhry
Assistant Professor, Department of Agricultural Engineering, Alfateh University, Tripoli, Libya

Md. Shahansha-ud-Din Choudhury
Principal Research Fellow, Dept of Agricultural Engineering, Institute for Agricultural Research, Ahmadu Bello University, P.M.B. 1044, Zaria, Nigeria

Jitendra P. Mittal
Lecturer Grade 1, Dept. of Agricultural Engineering, Ahmadu Bello University, Samaru, Zaria, Nigeria

E.U. Odigboh
Professor & Head of Agricultural Engineering Department, University of Nigeria, Nsukka, Nigeria

N.G. Kuyembeh
Dean, Faculty of Agriculture and Head, Dept. of Agric. Engineering, Njara University College, University of Sierra Leone, Sierra Leone

Abdien Hassan Abdoun
Director, General Administration for Engineering, Ministry of Agric., F & NR., Khartoum, Sudan (Until Dec., 1983: c/o The National Agric. Training Centers, Ministry of Agriculture and Water, P.O. Box 558, Riyadh, Saudi Arabia)

Mohamed A. Bedri
Director of Industrial Projects Implementation Administration (Projects Bureau), Ministry of Industry, P. O. Box 715, Khartoum, Sudan

Amir Bakheit Saeed
Lecturer, Dept. of Agricultural Engineering, Faculty of Agriculture, University of Khartoum, Khartoum, Sudan

Wimala Tissa Weerakoon
Manager & Director, Technology Development and Advisory Unit, University of Zambia, P.O.Box 32379, Lusaka, Zambia

— AMERICAS —

Irenilza de Alencar Nääs
Assistant Professor, Agricultural Engineering Dept., State University of Campinas, SP, Brazil

Allan L. Phillips
Project Manager – FAO-UNDP Project CHI/77/002 Technical Assistance to the Agric. Engineering Institute at the University of Conception, Chillan, Chile

A.A. Valenzuela
Head, Agricultural Engineering Department, University of Conception, Chillan, Chile

A.H. Mirdha
Visiting Professor, Dept. of Agricultural Engineering, Faculty of Superior Studies-Cuautitlan of the National Autonomous University of Mexico, Apdo. Postal-128, Cuautitlan de R.R., 54800 Edo. de Mexico

Megh Raj Goyal
Assistant Researcher, Agricultural Experimental Station, University of Puerto Rico, Subestación de Frutales S.R. No.2 Buzón 101, Juana Diaz, Puerto Rico

William J. Chancellor
Professor, Agricultural Engineering, University of California, Davis, California 95616, U.S.A.

Merle L. Esmay
Professor, Agricultural Engineering, Michigan State University, East Lansing, Michigan 48823, U.S.A.

— ASIA and OCEANIA —

Shah M. Farouk
Head, Dept. of Farm Power & Machinary, Bangladesh Agricultural University, Mymensingh, Bangladesh

Kshirode Chandra Roy
Senior Scientific Officer, Bangladesh Agricultural Research Institute, Joyedebpur, Dacca, Bangladesh

Manbahadur Gurung
Horticulture Extention Officer, Ministry of Development, Dept. of Agriculture, HA Bhutan P.O.HAA, Bhutan

Wang Wanjun
Chief Engineer and Vice Director of the Chinese Academy of Agricultural Mechanization Sciences, No. 1 Beishatan, Deshengmen Wai, Beijing, China

Satish Chandra
Assistant Director of Agriculture, Koronivia Research Station, Ministry of Agriculture and Fisheries, P.O. Box 77, Narsori, Fiji

A.M. Michael
Professor, Water Technology Center, Indian Agricultural Research Institute, New Delhi 110012, India

S.R. Verma
Dean, College of Agricultural Engineering, Punjab Agric. University, Ludhiana 141004, India

Siswadhi Soepardjo
Chairman, Agricultural Engineering Dept., Bogor Agricultural University, Jalan Gunung Gede, Bogor, Indonesia

Jun Sakai
Professor, Dept. of Agricultural Engineering, Faculty of Agriculture, Kyushu University 46-05, Hakozaki, Higashi-ku, Fukuoka 812, Japan

Bassan A. Snobar
Associate Professor, Faculty of Agriculture, University of Jordan, Amman, Jordan

Chang Joo Chung
Professor, Dept. of Agricultural Engineering, College of Agriculture, Seoul National University, Suwen, Korea

M L Esmay S M Farouk K C Roy M Gurung Wang Wanjun S Chandra A M Michael S R Verma S Soepardjo J Sakai

B A Snobar | C J Chung | P Andreou | M Z Bardaie | B K Shrestha | A D Chaudhry | B T Devrajani | A A Mughal | R M Lantin | C C Lee

R P Venturina | M H A Aziz | S Illangantileke | S K Kamathamby | T S Peng | G Singh | T T Pedersen | G Pellizzi | A Moens | J Kilgour

Paris Andreou
Associate Professor and Chairman, Department of Agricultural Economics and Business, American University of Beirut, Beirut, Lebanon

Muhamad Zohadie Bardaie
Head, Dept. of Field Engineering, Power and Machinery, Faculty of Agricultural Engineering, University of Agriculture Malaysia, Serdang, Selangor, Malaysia

Bala Krishna Shrestha
Assistant Agricultural Engineer, 4/141, Pulchowk Behind the Fire Brigade Latipur, Nepal

Allah Ditta Chaudhry
Associate Professor and Chairman of the Department of Farm Machinery and Power, University of Agriculture, Faisalabad, Pakistan (on leave to New Zealand: Agronomy Dept., Massey University, Palmerston)

Bherulal T. Devrajani
Principal Investigator, Sind Agriculture University, Tandojam, Sind, Pakistan

A.A. Mughal
Assistant Professor, Faculty of Agricultural Engineering, Sind Agriculture College, Tandojam, Sind, Pakistan

Reynaldo M. Lantin
Dean, Institute of Agricultural Engineering and Technology, University of the Philippines at Los Baños, College, Laguna 3720, Phillipines

Chul Choo Lee
Project Engineer, Projects Department, Asian Development Bank, P.O. Box 789, Manila, Philippines

Ricardo P. Venturina
Assistant Scientist for Agricultural Research, National Science Development Board, P.O. Box 3596, Rizal, Manila, Philippines

M.H. Abdel Aziz
Professor of Irrigation Engineering and Head, Agricultural Engineering Dept., Riyadh Univ., Saudi Arabia

S. Illangantileke
Head, Department of Agricultural Engineering, Faculty of Agriculture, University of Peradeniya, Sri Lanka

Suppiah Kathirkamathamby
Head, Agricultural Engineering Research and Development Division, Dept. of Agriculture, Peradeniya, Sri Lanka

Tien-Song Peng
Specialist, Plant Industry Div. Joint Commission on Rural Reconstruction 37, Nanhai Road, Taipei, Taiwan

Gajendra Singh
Associate Professor of Agricultural Engineering, Asian Institute of Technology, Bangkok, Thailand

-- EUROPE --

T.Touggaard Pedersen
Professor, Agricultural Engineering at the Royal Veterinary and Agricultural University, Copenhagen, Denmark

Giuseppe Pellizzi
Professor, Institute of Agricultural Machinery, University of Milano, Via G. Celoria 2–20133 Milano, Italy

Adrian Moens
Professor & Head, Dept. of Agricultural Engineering, Agricultural University, Dr. S.L. Mansholtlaan 12, Wageningen, Netherlands

John Kilgour
Lecturer in Engineering Drawing and Design, National College of Agricultural Engineering, Silsoe, Bedford. MK45 4DT, U.K. ■■

New Co-operating Editor

Joseph Chukwugozium Igbeka
(To cover Western Part in Nigeria)

Date of Birth: May 21, 1943
Nationality: Nigerian
Qualification:
1968 B.Sc. (Hons.) Agric. Engineering, 1970 M.Sc. Agric. Engineering, 1976 Ph.D Agric. Engineering.

Experience:
1970-72 Lecturer, University of Nigeria
1972-73 Chief Agric. Engineer, Mid-West Food Production (Nig.) Ltd., Nigeria.
1976-77 Post-doctoral Researcher, Ohio State University, Dept. of Food Science & Nutrition, Columbus, Ohio.
1977-81 Senior Lecturer, University of Ibadan, Dept. of Agric. Engg.

Present Position:
Reader/Associate Professor, University of Ibadan, Dept. of Agric. Engg.
Professor of Agric. Engg., Bendel State University, Epkoma, Nigeria.

BACK ISSUES

(Vol. 13 No. 1, Winter 1982 ~)

AGRICULTURAL MECHANIZATION IN ASIA, AFRICA AND LATIN AMERICA (Vol. 13 No. 1, Winter, 1982)

Editorial (Yoshisuke Kishida) 9
Agricultural Engineering Technology for Developing Country Students (Merle L. Esmay) 11
Status of Agricultural Mechanization in Mexico (Ahmed Hossain Mirdha) 15
Influence of Soil-Tool Parameters on Unit Draft (S. Swain) 19
Economic Efficiency of Tractors on Punjab Farms (Parkash Mehta) . . . 22
Effect of Lug Angle of Cage Wheels on Tractive Performance of Dual Wheels under Submerged Soil Conditions (S.K. Rautaray, K.N. Singh) 27
Determination of Optimum Drying Conditions and Development of Drying Equations for Thin-Layer Drying of Parboiled Wheat (A. Chakraverty, R.T. Kausal) . . . 33
Mechanization for Modern and Traditional Agriculture in Sudan (E.S. Mahmoud) 37
Evaluation of Farmer's Competence to Maintain Farm Tractors (Sheruddin B. Bukhari) 45
Measurement of Hydraulic Properties of a Brown Flood-Plain Soil of Bangladesh (S.M. Rahman, B.C. Basak, A.K.M. Habibullah) 48
Alternative Gas-Fuel Producer for Driving Gasoline Engine (Part 1) – Charcoal Gas Producer (Jun Sakai, Yasuo Shibata) 51
Soil Crusts vs Seedling Emergence: Review (Megh R. Goyal) 62
Food Production and Rural Development in Commonwealth Countries (Nurul Islam) 79
News 81
Book Review 84

◇ ◇ ◇

AGRICULTURAL MECHANIZATION IN ASIA, AFRICA AND LATIN AMERICA (Vol. 13 No. 2, Spring, 1982)

Editorial (Yoshisuke Kishida) 9
Performance of a Tractor-Mounted Oscillating Soil Working Tool (P.V. Narayanarao, S.R. Verma) 11
Human Energy Expenditure in Manually-Operated Rice Transplanter (Md. Abdul Baqui, Reynaldo M. Lantin) 14
Sprinkler System Evaluation: A Case Report (Mahmoud H. Abdel Aziz, Mohammed Saeed Hadrat) 17
Application of Sprinkler Irrigation in the Sudan (Khamies Kajo Konda, Tawfig Fahmi Demian) 23
Influence of Selected Seedling Mat Parameters and Planting Speed on Performance of Rice Transplanter (I.K. Garg, C.P. Singh, V.K. Sharma) 27
Performance of a Simple Tractor-Mounted Deep-Hole Digger (R.D. Singh, Bhagwan Singh, K.N. Singh) 34
Development and Testing of a Manually-Operated Dung Cleaner (H.C. Joshi, D.N. Jana, D. Chaudhri) 39
A Comparative Study of Conventional and Mechanized Farming Relative to Energy Use and Cost (A.C. Srivastava) 42
Tillage Machines Combined with Moldboard Plow (Sheruddin Bukhari, Jori Istavan, Lehoczky Laszlo, Banhazi Janos) 51
Performance and Potential of Rubber Rolls in Husking Paddy (U.N. Singh) 56
Elastic and Visco-elastic Properties of Agricultural Products in Relation to Harvesting and Post-Harvest Processes (U.G.N. Anazodo) 59
Performance Evaluation of a Modified Fertilizer Applicator (K.C. Oni) 67
Status and Problems of Mechanization in Sierra Leone (N.G. Kuyembeh) . . . . . .
Forced Aeration: A Technique to Handle High Moisture Paddy under Humid Condition (Surya Nath, A.K. Ganguly) 77
News 79
New Products 81
Book Review 86

◇ ◇ ◇

AGRICULTURAL MECHANIZATION IN ASIA, AFRICA AND LATIN AMERICA (Vol.13, No.3, Summer, 1982)

Editorial (Yoshisuke Kishida) 9
A More Efficient Buffalo Plow (R.C. Fischer) 11
Performance of Harnesses Used for Draught Animals (B.P. Varshney, T.N. Mishra, Akhilesh Kumar, R.P. Singh) 15
Fuel Consumption of Tillage Implements (Sheruddin B. Bukhari, Jan Mohammad Baloch) 20
Economic Evaluation of Land Levelling (Riaz A. Khattak Mohammad Asrar, Jehangir K. Khattak, S.U. Khan) 23
Contribution of Ground Water in the Evapo-Transpiration Demand of Soybean (Glycine Max. L.) (K.M. Hassanuzzaman, S.M. Rahman, M.R. Biswas) 25
Effect of Preplanting Irrigation on Cotton Cultivation (Md. Motiur Rahman Khan) 29
Mechanization of Oil Palm Fruits Harvesting and Transportation in Malaysia (M. Zohadie Bardaie, Wan Ishak Wan Ismail) 31
Mechanization of Oil Palm Plantation Technology (Naresh Chandra Saxena) 35
A Cassava Harvester: Design Analysis and Prototype Development (E.U. Odigboh, S.F. Ahmed) 40
Design, Construction and Performance of a Jute Decorticating Machine (M.A. Mazed, K.C. Roy) . . . 53
Mechanization of Paddy Production in Malaysia (A.A. Mainul Hussain) 56
Mechanization of Family Farms in Nigeria (U.G.N. Anazodo) 59
Standardization and Quality Control in Agricultural Machinery (R.N. Sharma) 66
Paddy Straw Utilization for Bags and Mats (M.M. Kashyap, Amar Singh) 69
Calotropis procera (Ait.) R. Br. – Ak:A New and Free Source of Fibre and Renewable Hydrocarbons (Subhash S. Arora, Kiran S. Arora) 71
News 78
New Products 79
Book Review 85

◇ ◇ ◇

AGRICULTURAL MECHANIZATION IN ASIA, AFRICA AND LATIN AMERICA (Vol. 13, No. 4, Autumn, 1982)

Editorial (Yoshisuke Kishida) 9
Clearing of "Alang-Alang" Steppe Land in South Sumatra, Indonesia (Gajendra Singh, Bambang Pramudya) 11
An Automatic Cassava Planter (E. U. Odigboh) 15
Appropriate Tine Arrangement for Better Tillage and Efficient Tool Performance (Muhammad Saleh Soomro, G. Spoor R. J. Godwin) . . 21
Animal Drawn Multi-Purpose Tool Carriers (R. K. Bansal, G. E. Thierstein) 27
Use of Oil Bubbles for Estimating Flow Rates in Open Channels (Amir Bakheit Saeed) 37
Briquetting of Paddy Straw (Amar Singh, Y. Singh) 42
Deep Tube-Well Irrigation and Adoption Certain Practices for Rice Cultivation in Bangladesh (Paris Andreou, Fauzi Al-Haj, Md. Ismail Hossain) 49
High Temperature Flame Drying of Freshly Harvested Peanut Pods (A. C. Srivastava, W. K. Bilanski, P. White) 53
Cold Storage of Seed Potatoes in Paddy Straw Bags (A. K. Gupta, Amar Singh, V. Singh) 58
Costs of Owning and Operating Tractors: A Review (Sheruddin B. Bukhari) 61
Farmers' Knowledge and Facilities to Maintain Tractors on the Farms (Sheruddin B. Bukhari, Mohammad Iqbal Khan) 68
Energy Use for Crop Production in Bangladesh (Nripendra Nath Sarker, Shah M. Farouk) 71
Energy Efficiency of Power System Options for Irrigation (B. S. Pathak R. M. Engira, K. D. Mannan) 75
Tractive Power Losses in Tracks of a Tractor (Dipankar De, D. Chaudhuri, K. P. Pandey) 79
News 83
New Products 85

AGRICULTURAL MECHANIZATION IN ASIA, AFRICA AND LATIN AMERICA (Vol. 14, No. 1, Winter, 1983)
Editorial (Yoshisuke Kishida) 9
Systems Engineering in Precision Automatic Transplanting (Barney K. Huang) 11
Design of a Simple, Low-Lift, Wind-Powered Pump for Rural Use in Thailand (Desa Ahmad) 20
Anthropometric Survey of Indian Farm Workers (P. K. Gupta, A. P. Sharma, M. L. Gupta) 27
Water Conveyance for Farms and Minor Irrigation Schemes (R. C. Yadav) 31
Energy Recovery in Man-Powered Pumps (S. M. Nazrul Islam) 37
Profile of the Development of Agricultural Mechanization in China (Wang Wanjun) 41
Small Tractors in China (Kong Depeng, Ling Tongsen, Xü Guangqin) 44
Use of Combine Harvester in Malaysia (A. A. Mainul Hussain, Wan Ishak Wan Ismail) 53
A Centrifugal Impeller-Type of Sunflower Seed Decorticator (K. N. Nag, Pratap Singh, Rajash Bhandari) 55
Design-Related Physical Properties of Selected Agricultural Products (A. N. Waziri, J. P. Mittal) 59
Utilization of Rice Mill Wastes and By-Products: A Case Study in Thailand (Md. Wali Ullah) 63
Trench Silo for Bangladesh Farms (Md. Mahabubur Rahman Mollah, Ahmed Hossain Mirdha, Md. Habibur Rahman Khan) 65
Paradox of Tractorization in Pakistan (M. Yusuf Mubasher) 69
Agricultural Development and Requirement for Short Term Finance: Case Study of Binjharpur Block, Orissa (T. N. Datta, Anthony D'Costa) 77
Manual Labor Displacement with Tractorization (Bashir Ahmad) . . . 81
News 86

AGRICULTURAL MECHANIZATION IN ASIA, AFRICA AND LATIN AMERICA (Vol.14, No.2, Spring, 1983)
Editorial (Yoshisuke Kishida) 9
Development of Peanut Combine Harvester (Yang-ren Hwang) 11
Tillage and Irrigation on Water Use by Wheat in Grey Terrace Soil of Bangladesh (Z. Karim, A.J.M.S. Karim, A.A. Pahlwa) 17
A Model of Field Grain Sorghum Moisture Contents (Surya Nath, William H. Johnson) 21
Modification and Testing of a Manual Rice Transplanter (Gajendra Singh, Uqaili Khalid Hussain) 25
Properties of Parboiled Rice Produced from Japanese Paddy (Toshinori Kimura) 31
Development and Evaluation of a Granular Insecticide Applicator (M. Shyam) 34
Design, Development and Testing of a Bullock-Drawn, Single-Row Seed-Cum-Fertilizer Drill (D.N. Sharma, N.K. Bansal, M.L. Jain) 37
Accuracy of Measurement of Soil Water by Neutron Probe (Md. Abdur Rab) 41
Pneumatic Separator for Various Rice Fractions (P.K. Chattopadhyay, Prem Chand, T.C. Mishra, N.D. Patil) 49
Development of Wheel Pump for Low-Lift Irrigation (Choudhury Md. Amiruddin Khan) 55
Survey on Traditional Methods of Harvest and Post-Harvest Practices (K.V. Selvaraj, V. Subramanian) . . 59
Status of Selected Tillage Implements on Progressive Farms in Pakistan (Muhammad Afzal, Usman Mustafa, Tanvir Ahmad) 62
Implications of Farm Mechanization for Employment, Productivity and Income (Bashir Ahmad) 65
Performance Study of a Solar Cooker (Kedar N. Nag, A.N. Mathur) 69
Stabilization of Rice Bran by Conduction and Humid Heat Treatments (A. Chakraverty, N.C. Patel) 72
Use of Wind Power in New Zealand: Its Scope in Pakistan (Shamsuddin A. Mahar) 77
News 82
Book Review 85

AGRICULTURAL MECHANIZATION IN ASIA, AFRICA AND LATIN AMERICA (Vol.14, No.3, Summer, 1983)
Editorial (Yoshisuke Kishida) 9
Direct Seeding with Coated Rice in Submerged Paddy Field (Yoshiaki Nakamura, Haruhiko Murase, Sakae Shibusawa) 11
Evaluation of IRRI-Pantnagar bullock-Drawn, Six-Row Paddy Seeder (R.D. Singh, Bhagwan Singh, K.N. Singh) 15
Development of a Wetland Seeder from Mechanical and Ergonomical Considerations (V.K. Tewari, R.K. Datta) 21
A Progressive Approach to Minimum Tillage (G.S. Sheikh, Khalid Pervez, J.K. Sial, Muhammad Afzal, Abdul G. Ansari, Muhammad Yasin) 28
Evaluation and Modification of Two Peanut Shellers (Gajendra Singh, Pinai Thongsawatwong) 33
Renewable and Non-renewable Resources in Irrigation Pumping (T.B. S. Rajput, Ashwani Kumar) 41
Selecting and Adapting Farm Machinery to Rural Conditions (J.C. Igbeka) 45
Kinematics of Single Rotary Blade in Rice Harvesting Machine (M. Majumder, R.K.Datta) 49
Engineering Properties of Rice Husk Boards (B.D. Shukla, T.P. Ojha, C.P. Gupta) 52
Effect of Vane Inclination on Performance of Radial Vane Centrifugal Pump (Md. Quamrul Islam, Obaidul Islam) 59
Computer Prediction of Suitable Workdays for Mechanized Winter Wheat Operations in Chile (Edmundo J. Hetz, Arthur Gold, Luke E. Reese) 62
Tillage Practices in Mechanized Farms in Pakistan (Khwaja Altaf Hussain, Abdul Shakoor Khan, A.D. Chaudhry) 67
The Development of Agricultural Mechanization and its Strategies in Taiwan (Tien-song Peng) 71
Status and Scope of Wheat Production in Nigeria (O.P. Kataria) 75
News 81
Book Review 84

INDEX TO ADVERTISERS

Agritech '83 91
EIMA 5
Iseki & Co., Ltd. 2
Mametora Agric. Machinery Co., Ltd. 92
Matsuyama Plow Mfg. Co., Ltd. 5
Ohashi Agricultural Machinery Mfg. Co., Ltd. . . 4
Shizuoka Seiki Co., Ltd. 91
Taiwa Noki Co., Ltd. 4
Tokai Industry Co., Ltd. 91

AMA ABSTRACTS AND INDEX, 1971–1980

— A Key to Wealth of Information —

As the AMA enters its 13th year of publication this year, the Editorial Staff deems it appropriate to commemorate the event by publishing "Abstracts and Index 1971-80" in May, 1983 for only ¥2,000 a copy, including sea mail postage.

During the decade 1971-1980, more than a thousand articles were received by AMA from readers and co-editors. Over 600 of these contributions were published from which the abstracts and index in various aspects of agriculture and agricultural mechanization in developed and developing countries were arranged for use as a handy reference by students, government officials, ressearchers and academicians interested in agriculture and agricultural mechanization. For example, at a glance, the abstract and index tell about the content of the article, author and AMA issue number. The publication form is A3 size (18.5 cm x 21 cm) 82 pages.

A limited number of copies are still available for which reason they will be sold on a first-come, first-served basis. In order that interested readers get their copies of the publication, it will be very useful for them (and convenient for the AMA Staff) to fill up the order from inserted in this issue and mail it to –

FARM MACHINERY INDUSTRIAL RESEARCH CORP.

7-2 Kanda Nishikicho, Chiyoda-ku, Tokyo, Japan (Tel. 03/291–5717~8, 3671~4)

Japanese Agricultural Machinery Catalogue '83

This bi-annual Catalogue is published in odd-numbered years. This 1981 edition introduces the latest models and designs of Japanese agricultural machines, equipment and facilities in 154 color and black/white photographs in 36 pages. Detailed specifications of each product are provided in 127 pages. It lists 300 leading machinery manufacturers in a directory that is conveniently indexed by trade and brand names of the product.

Other features in Japanese include recent breakthroughs and innovations incorporated in the design and functions of the new models.

The catalogue measures 18 cm x 25.6 cm, in limp cover and sells for ¥6,800 (sea mail) and ¥7,800 (air mail).

SHIN-NORINSHA CO., LTD.

7-2 chome, Kanda Nishikicho, Chiyoda-ku, Tokyo 101 Japan

Portable Moisture Meter for Rice, Wheat and Barley, MODEL CD-2

Digital Display, Temperature-compensated, No conversion table necessary with grain selection buttons.

Weighs less than 700 grams, can be put in your pocket.

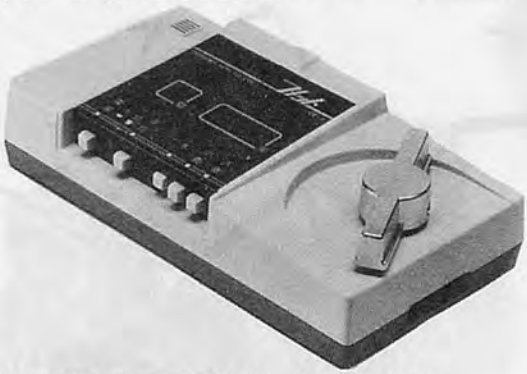

SHIZUOKA SEIKI CO., LTD.
4-1 YAMANA, FUKUROI, JAPAN 437
Telex:04263707 SEIKI J
Phone (05384)2-3111,2477

TOKAI, ALL-ROUND MAKER OF PREVENTIVE AND EXTERMINATING MACHINES

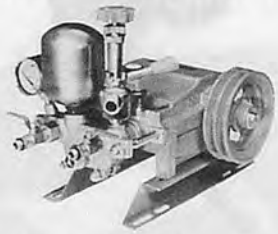

Power Sprayer Model TS-25

Knapsack Man-power Sprayer Model H-1

With 35 years' history of manufacturing and credit of users, Tokai is a most outstanding company in Japan which has specialized all along in the manufacture of preventive and exterminating machines. We produce hand-operating sprayers of some 20 kinds ranging from pack to shouldering models. In the area of power sprayers we turn out some 12 kinds ranging from the super light-weight and mini-size to all of the standard size as well as large-size power sprayers Tokai has put on the market lately some 10 kinds of speed sprayer - the Apolo series speciaily designed for use for orchards.

TOKAI SPRAY MACHINE CO.,LTD.

Head Office and Factory: 32, Midorien, Ogaki City, Gifu-pref., 503 Japan.
phone: 0584-78-6131(R)
telex: 0-4793-678 TOKAIS J
cable adress: 'TOKAISPRAY' OGAKI JAPAN

agritech israel 83

3-6 OCTOBER, 1983
International Agricultural Exhibition Tel Aviv, Israel

AGRITECH 83 — WHERE ISRAEL WELCOMES AGRICULTURISTS FROM AROUND THE WORLD

More than 120,000 visitors from 70 countries are expected at Agritech 83, where over 500 firms from 50 countries will be displayed.

At Agritech 83, agriculture's most modern technology and world-renowned developments by top Israeli experts are yours to see — and experience. Everything from the most advanced achievements to know-how for high-yield production to the special technology for progress will be on display.

AGRITECH 83 — PROGRESS THROUGH AGRICULTURE

Agritech 83 exhibits cover all branches of agriculture:

- Farm Machinery.
- Irrigation Equipment and Systems.
- Livestock and Poultry Equipment.
- Agrochemicals and Veterinary Products.
- Horticulture and Seeds.
- Agro-Industry.
- Handling & Transportation.
- Computerized Systems and Research.
- Agricultural Construction and Buildings.
- Rural Development.

Schedule of Events
In addition to the exhibits and displays, visitors can attend practical on-site demonstrations. Participants are invited to take part in professional tours and seminars.

Professional Symposiums
Agritech 83 offers numerous professional symposiums and seminars on a wide range of topics, among them:

- **The 3rd International Conference on Irrigation**
  A) Planning and Operation of Irrigation Systems.
  B) Chemigation.
- **Seminar on Plant Protection**

For further details
please contact the organizing committee or your nearest Israeli representative.

Agritech 83 Organizing Committee
P.O. Box 50084, Tel Aviv 61500 Israel

MAMETORA DEDICATES TO AGRI

It is the motto of MAMETORA that we manufacture goods in order to meet customer's benefits with originality' trusty and hearty. In addition to the head office in Okegawa' Kisakata Factory has been established. Now that we have formed the much steadier basis as a comprehensive manufacturer. We are always making efforts to manufacture goobs of high quality and are pleased to devote ourselves to the food industry in the world as well as that in Japan.

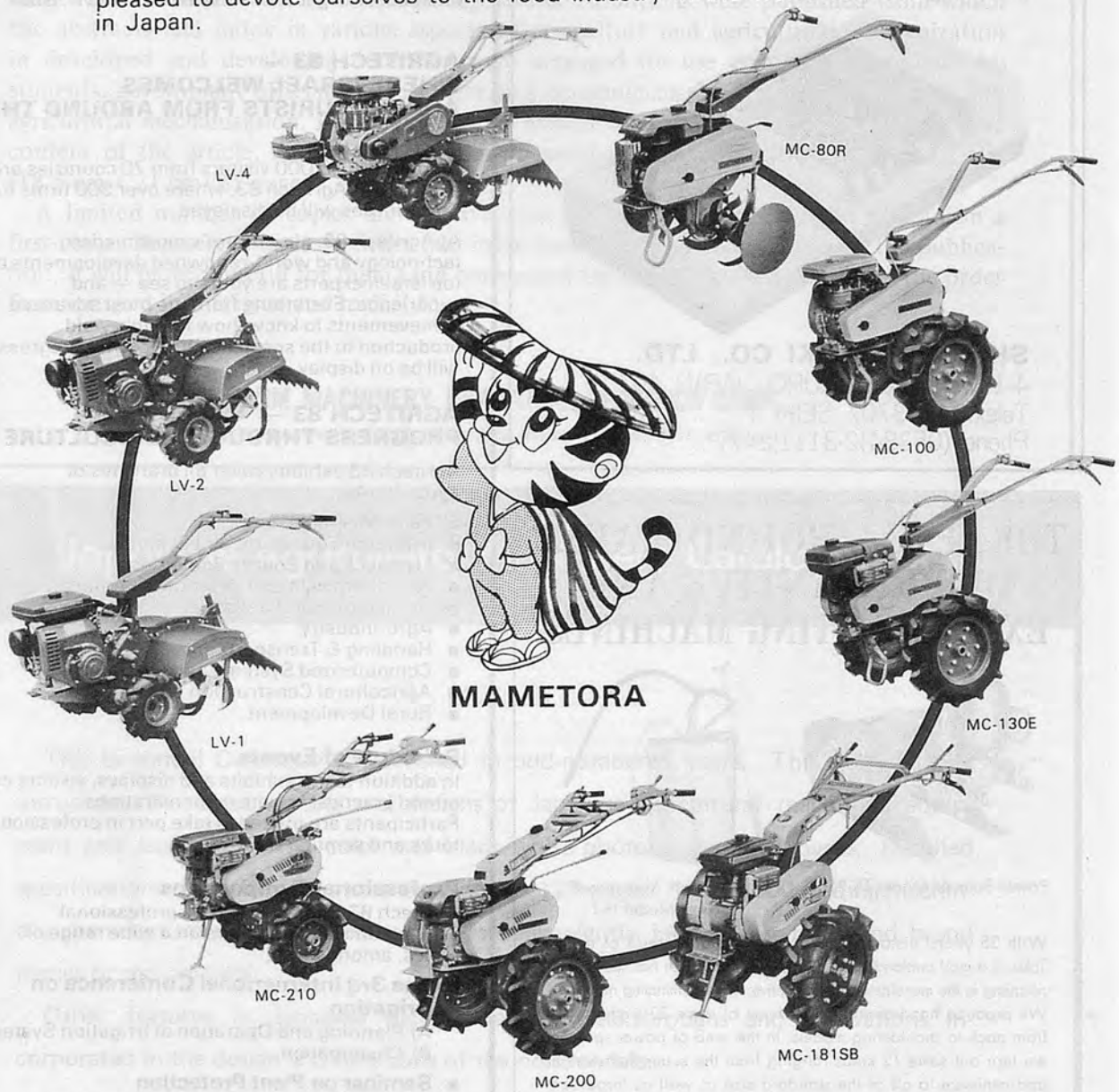

MAMETORA AGRIC. MACHINERY CO., LTD.

HEAD OFFICE ADD: 9-37, NISHI-2 CHOME, OKEGAWA-SHI, SAITAMA-KEN, JAPAN.
TELEPHONE: 0487-71-1181 TELEX: 2922561 MAMETO-J

CULTURE ALL OVER THE WORLD

○ Preeminent above the rest for economical efficiency. Rational design. Nothing but small-sized agricultural machinery displays opration efficiency like this.

This is the first Full Automatic Transplanter TPA-1 that Engineering Division of Mametora Noki Co., Ltd. has developed for the first time in the world.
This is cassette type transplanter only to put in seedling boxes. Suitable for Chinese cabbage, lettcue, cabbage and cauliflower.

Tobacco transplanter that is mostly used for trans planting tobacco in Japan.

Plowing operation by Mametora Tiller.

Oil pressure is largely introduced to this planter, and so this Mametora Planter is easy to use. This can be used for planting all Kinds of seedlings from small to large.

Operation in a greenhouse by Return Cultivator SR Type. This has wide application for seedbed, ridge and cultivation in orchards.