International specialized medium for agricultural mechanization in developing countries

ISSN 0084-5841

AMA

AGRICULTURAL MECHANIZATION IN ASIA, AFRICA AND LATIN AMERICA

VOL.18, NO.3, SUMMER 1987

FARM MACHINERY INDUSTRIAL RESEARCH CORP.

ISEKI

ISEKI...Dedicated abundant harvests

As the means of producing life-sustaining food, agriculture surely rates as one of the most important industries in the world.

Since its founding 60 years ago, ISEKI has been doing its part to ensure that those engaged in the worldwide agricultural effort can meet modern challenges. Through the production of quality farm machinery and labor saving systems, ISEKI has become famous as the premier manufacturer of such machinery.

It is ISEKI's sincere hope that by continuing these efforts, world agriculture will further develop, thereby producing abundant harvests and world peace for people everywhere.

to producing and world peace

ISEKI & CO., LTD.

Foreign Affairs Division
3-6, Kioi-cho, Chiyoda-ku, Tokyo, 102 Japan
Cable Address: ISEKIRICE TOKYO
Telex: 232-2752, 232-2753
Phone: (03) 238-5245~5260

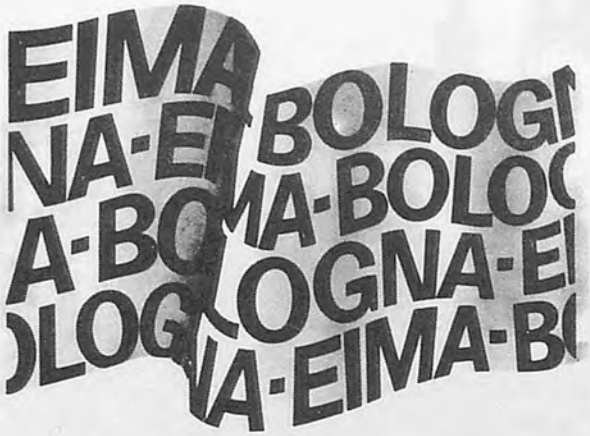

BOLOGNA
11-15 NOVEMBER 1987

Admission by invitation:
11-12-13 November

Admission to public:
14-15 November

international exhibition of agricultural machinery manufacturers

exhibition of gardening machinery

Organized by UNACOMA
with the collaboration of the ENTE AUTONOMO FIERE DI BOLOGNA

for further details :

eima 00161 ROMA-VIA L. SPALLANZANI 22/A
TEL. (06)8449441 TELEX 614126 -TELEGRAMMI ⟨UNACOMA-ROMA⟩

1987 EDITION

FARM MACHINERY YEARBOOK

The 1987 edition now available has 216 pages of the latest comments, statistics and useful addresses pertaining to agricultural mechanization in Japan. The commentaries focus on trends in Japan's agricultural development and agricultural machinery industry and production and results of farm machinery research efforts.

The statistical information pertains to agriculture, in general, and agricultural mechanization, in particular. The yearbook also contains addresses and references of administrative authorities, experiment stations, farm machinery manufacturers and foreign address of use to importers and exporters.

It measures 18.0 cm x 26.5 cm in hard cover and sells for ¥10,300 (sea mail) and ¥12,000 (air mail).

SHIN-NORINSHA Co., Ltd.
7, 2-chome, Kanda Nishikicho, Chiyodaku, Tokyo 101 Japan

A line-up of superb, compact agricultural machines from Ohashi

HR-650
HAMMER-ROTOR MOWER

GR-700
GREEN ROTARY MOWER

SM-602A
AUTO MOWER

You are proud to own the best.
Ohashi Mowers are designed for big-job performance and capacity.

OHASHI AGRICULTURAL MACHINES CO., LTD.
Head Office: 23-4 Jyojima-machi Mizuma-gun Fukuoka 830-02 Japan
Tel. 0942-62-3161～4
Telefacs 0942-62-6078

CONTRIBUTORS WANTED

This publication, published quarterly, has an objective to promote agricultural mechanization in developing countries. Its readers consist of so many people in various fields such as farmers, dealers, manufacturers, researchers, government officials, students, etc. not only in Asia but also in the whole world. To enrich contents and to reflect many opinions, we want contributors for **Agricultural Mechanization in Asia" Africa and Latin America.** Articles, comments, investigations, reports and so on will be received with open arms. If you hope to contribute, contact us without delay.

FARM MACHINERY INDUSTRIAL RESEARCH CORP.
7-2 Kanda Nishikicho, Chiyoda-ku, Tokyo, Japan (Tel. 03/291－5717～8, 3671～4)

SUKIGARA CULTIVATOR & RIDGER

IMPLEMENTS & ATTACHMENTS FOR TRACTORS

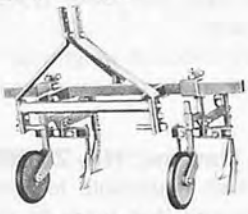

Double-Row Cultivator TBC
(Tool Bar & Cultivator)

Triple-Row Ridger TCRM

Double-Row Ridger TBR-H2
(Tool Bar & Ridger)

SUKIGARA AGRICULTURAL MACHINERY CO., LTD.
YAHAGI-CHO, OKAZAKI-CITY, AICHI PREF., 444 JAPAN
TEL OKAZAKI (0564)31-2107
FAX (0564)32-1990(G2)
CABLE ADDRESS; "SUKIGARA" OKAZAKI, JAPAN

YAMAMOTO RICE WHITENER
RICEPAL SERIES

★ HIGH RECOVERY RATE.
★ IMMATURED RICE CAN BE MILLED.
★ NO REMAINING RICE IN THE MACHINE.
★ EASY TO CHANGE MILLNG SCREEN.
★ DURABLE CONSTRUCTION.

EXPERIENCED MANUFACTURER OF POST-HARVEST MACHINERY FOR THE CEREALS.

YAMAMOTO MFG. CO., LTD.

HEAD OFFICE & FACTORY: 813-17 TENDO-KO. TENDO-SHI. YAMAGATA-KEN JAPAN
TELEX: 872266 YMCTND J TELEFAX: 0236-54-7781 TELEPHONE: 0236-53-3411

Niplo AGRICULTURAL MACHINERY

(1) **Rotary Tiller: SX-1700**
The spiral bevel gear on the drive shaft is lighter and stronger than older types and much more silent in operation.
We have reduced weight but maintained top culting efficiency in these new ribbed blades.

Model SX-1700(25~45ps)

(2) **Drive Harrow: HR-2000B**
This makes it possible to bring back into the paddy field the soil that tends to pile up against the border levee, in the final puddling stage.

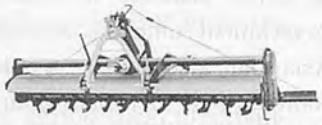

Model HR-2000B(20~24ps)

(3) **Reversible Plow: MR-83N**
A high performance standerd plow for 6-7PS power tillers.
The plow can be adjusted to perform well in all types of soil by adjusting the differential fingers.

Model MR-83N(6~7ps)

MATSUYAMA PLOW MFG. CO., LTD.

2949, Shiokawa, Maruko-machi, Nagano-ken, 386-04 Japan
Phone: (0268)35-0300 Telefax: (0268)35-3231

International specialized medium for agricultural mechanization in developing countries

AMA

AGRICULTURAL MECHANIZATION IN ASIA, AFRICA AND LATIN AMERICA

VOL.18, NO.3, SUMMER 1987

Edited by

YOSHISUKE KISHIDA

Published quarterly by

Farm Machinery Industrial Research Corp.

in cooperation with

The Shin-Norinsha Co., Ltd.

and

The International Farm Mechanization Research Service

TOKYO

Yoshisuke Kishida, Publisher & Chief Editor

Contributing Editors and Cooperators

- AFRICA -
Van Lancker, Julien G. (Brundi)
Hanna, George B. (Egypt)
Kandiah, Arumugam (Ethiopia)
Ampratwum, David Boakye (Ghana)
Choudhury, Md. Shahansha-ud-Din (Nigeria)
Igbeka, Joseph C. (Nigeria)
Odigboh, E.U. (Nigeria)
Oni, Kayode C. (Nigeria)
Kuyembeh, N.G. (Sierra Leone)
Abdoun, Abdien Hassan (Sudan)
Saeed, Amir Bakheit (Sudan)
Saxena, N.C. (Tanzania)

- AMERICAS -
Nääs, Irenilza de Alencar (Brazil)
Ghaly, Abdelkader E. (Canada)
Valenzuela, A.A. (Chile)
Mirdha, A.H. (Mexico)
Chancellor, William J. (U.S.A.)
Esmay, Merle L. (U.S.A.)
Goyal, Megh Raj (U.S.A.)
Srivastava, Krishna P. (West Indies)

- ASIA and OCEANIA -
Farouk, Shah M. (Bangladesh)
Mazed, M.A. (Bangladesh)
Gurung, Manbahadur (Bhutan)
Wang, Wanjun (China)
Chandra, Satish (Fiji)
Michael, A.M. (India)
Verma, S.R. (India)
Soedjatmiko (Indonesia)
Sakai, Jun (Japan)
Snobar, Bassan A. (Jordan)
Chung, Chang Joo (Korea)
Haffar, Imad (Lebanon)
Bardaie, Muhamad Zohadie (Malaysia)
Shrestha, Bala Krishna (Nepal)
Afzal, Mohammad (Pakistan)
Chaudhry, Allah Ditta (Pakistan)
Chaudhry, Md. Siddique (Pakistan)
Devrajani, Bherulal T. (Pakistan)
Mughal, A.Q. (Pakistan)
Nath, Surya (Papua New Guinea)
Lantin, Reynaldo M. (Philippines)
Lee, Chul Choo (Philippines)
Venturina, Ricardo P. (Philippines)
Aziz, M.H. Abdel (Saudi Arabia)
Illangantileke, S. (Sri Lanka)
Kathirkamathamby, Suppiah (Sri Lanka)
Peng, Tien-Song (Taiwan)
Singh, Gajendra (Thailand)
Pinar, Yunus (Turkey)

- EUROPE -
Kaloyanov, Anastas P. (Bulgaria)
Pedersen, T. Touggaard (Denmark)
Pellizzi, Giuseppe (Italy),
Moens, Adrian (Netherlands)
Kilgour, John (U.K.)

EDITORIAL STAFF
(Tel. 03/291-5718)
Yoshisuke-Kishida, Chief Editor
Kensuke Sakurai, Managing Editor
Yoshinori Sasaki, Assistant Editor
Noriyuki Muramatsu, Assistant Editor
D.A. Cruz, Editorial Consultant

ADVERTISING
(Tel. 03/291-3672)
Kuniharu Ikeda, Manager (Head Office)
Hiroshi Yamamoto, Manager (Branch Office)
Advertising Rate: 300 thousand yen per a page

CIRCULATION
(Tel. 03/291-5718)
Soichiro Fukutomi, Manager
Editorial, Advertising and Circulation Headquarters
7, 2-chome, Kanda Nishikicho, Chiyoda-ku, Tokyo, 101 Japan

Copyright © 1986 by
FARM MACHINERY INDUSTRIAL RESEARCH CORP.
SHIN-NORIN Building
7, 2-chome, Kanda Nishikicho, Chiyoda-ku, Tokyo, 101 Japan
Printed in Japan

This is the 56th issue since the issue, Spring of 1971

EDITORIAL

The Gap Between Developed and Developing Economies

When we watch on TV with bewildered looks at the scores of unfortunate children starving and dying like flies in some famine-stricken countries, I wonder if we can simultaneously perceive that the economic gap between developed and developing countries has something to do with the fate of those children who "die without seeing the dawn".

When I sound out a clarion call or make an appeal through AMA editorials like this to close ranks and help one another close that economic gap, I also wonder if I am raising the right question as I am not getting the right answer nor getting any reaction from readers.

The truth of the matter is that the fate of those unwilling children is none of their own choosing. And, perhaps, I might be *barking at the wrong trees* when I make my appeals. But it seems far-fetched and unbelievable that much of this hunger problem or widening economic gap have to do, if indirectly, with the pricing of agricultural products which are decided, by and large, in trading houses in capitals of the world such as the Chicago Board of Trade by big-time farmers in North America. And it is ironic that those few farmers operate individual farms of several hundred hectares in size compared with millions of small farmers who each till an average of 2 or 3 hectares of farmland. This is not to say that the fortunate "haves" should voluntarily give away some parcel of their holdings to the unfortunate "have nots." That would not be practical nor would it narrow down the economic gap that separates the rich country from their poor counterparts. And there must be a way or ways of narrowing down this gap – but never to close it which is impossible.

For example, the aid-givers of the world such as the USAID, United Nations subsidiaries such as UNICEF and service organizations like the Red Cross have since been doing their share in narrowing down the gap which, of course, continues to widen when the resources of aid-givers run dry. And those resources are not renewed as fast as they are exhausted. What this means is that these efforts are, at best, stop-gap solutions or pain relievers but not really the cure. Somehow, sometime and soon enough, ways must be found to permanently narrow down the economic gap.

The AMA management will continue to do its share no matter how small, which, in this particular instance, means that we shal call for position papers, case studies or dissertations that purport to offer formulas or solutions to the economic gap problems. The AMA will be very happy to play up selected papers in this regard in its subsequent issues.

Yoshisuke Kishida
Chief Editor

Tokyo
July, 1987

CONTENTS

AGRICULTURAL MECHANIZATION IN ASIA, AFRICA AND LATIN AMERICA

Vol. 18, No. 3, Summer, 1987

Yoshisuke Kishida	9	Editorial
Jun Sakai Surin Phongsupasamit Tadashi Kishimoto	11	Engineering Design Theories of Hand-Tractor Plows
N.K. Awadhwal T. Takenaga R.K. Bansal	21	Development of Improved Agricultural Implements at ICRISAT
Dŏgan Erdŏgan	26	A Study on Field Performance of Small Tractors
Sheruddin Bukhari J.M. Baloch Ali Nawaz Merani	29	Factors Affecting Repair and Maintenance Costs of Farm Tractors
Surendra Singh Santokh Singh V.K. Sharma P.K. Gupta	33	Feasibility Study on Animal-Drawan Tool Carrier for Selected Crop Rotations
A.S. Patil A.S. Sirohi	36	Implications of Tractorization on Employment, Productivity and Income in an Irrigated Area of Ahmednagar District, India
A. Khair S.C. Dutta	41	Lining Irrigation Canals with Asphaltic Materials in Bangladesh
Imam Bux Koondhar Bashir Ahmed Chandio Bherulal T. Devrajani	46	Effect of Irrigation Methods on Silage Yield of Corn
R.C. Yadav U.S. Gupta	49	Monitoring Corn Canopy and Root by Precision Planting: A Challenge on Planter Design
A.H. Abdoun	51	Drainage Problems in Al Hasa, Saudi Arabia
Suleiman Juma Omar Ritsuya Yamashita	53	Rice Drying, Husking and Milling
O.P. Singhal G.E. Thierstein	57	Development of an Axial-Flow Thresher with Multi-Crop Potential
D.V.K. Samuel S.A.D. Prasad	66	Development of a Bulk-Milk Vending Machine
H.C. Joshi D.N. Jana D. Chaudhuri A.E. Nivsarkar	69	Bullock-Operated Dung-Cleaner
S.L. Srivastava N.G. Bhole	71	A Low Cost Village-Level Milk Sterilizer
Toshio Konaka	75	Farm Machinery Utilization Planning

Abstracts	81
News	82
New Products	83
Book Review	84

* * *

New Co-operating Editors 68
Co-operating Editors 86
Back Issues 88
Index to Advertisers 89

Engineering Design Theories of Hand-Tractor Plows

—Relation between Hand Tractors, Wheels, Plows and Human Engineering—

by
Jun Sakai
Professor
Agric. Engg. Dept.
Kyushu University
Hakozaki, Fukuoka 812
Japan

Surin Phongsupasamit
Graduate Student
Agric. Engg. Dept.
Kyushu University
Hakozaki, Fukuoka 812
Japan

Tadashi Kishimoto
Graduate Student
Agric. Engg. Dept.
Kyushu Univ.
Hakozaki, Fukuoka 812
Japan

Abstract

This paper is a continuation of the preceding three papers published in the AMA.[1),2),3)] Those papers concern about technological development of tractorization and tillage implements necessary in small-scale family farms, plow structures related to Asian lowland-paddy farming and appropriate plow structures for plowing requirements, respectively. In this presentation, the theoretical relationship between hand tractors, wheels, plows and human engineering in the best and standard plowing forms in three dimensions are expressed in mathematical equations. Under such a situation, whole planning design theories are developed and applied to actual design practices so as to attain ideal plowing performance. The effective location of plows which influences plowing efficiency of hand-tractors are primarily discussed. The detail planning design of plow structures will be presented later in this publication after the specialized lug-shaped of iron wheels in stable plowing without holding on handles is discussed in the subsequent papers.

Introduction

Agricultural mechanization promotion can be successfully achieved when farm machines and implements are well developed to suit local farming conditions, and are acceptable among the majority of farmers in a country. In order to develop such farm machines, planning-design theories, design know-hows and engineering technologies should be understood and afterwards, effective blue prints have to be produced. Planning design is a primary and very important process in developing farm machines. Unfortunately, the principal design ideas and technical planning-design know-hows are rarely made public. The basic process of planning design consists of whole planning design, detail planning design and parts planning design.

This paper intends to introduce the whole planning-design process of a turn-wrest plow for a hand tractor. In order to attain plowing efficiency of hand-tractor plows, designers have to consider the whole machine involved in plowing: (i) hand tractors; (ii) wheels and (iii) plows. Moreover, it is necessary for human engineering to be considered also in designing plows in order to allow the plowman to perform efficiently and safely and with the least fatigue. However, before the whole planning-design layout is initiated, it is necessary to know three basic situations of plows in tillage: (i) working quality; (ii) crop requirements and (iii) plowing performance. The working quality of the plow is determined by the quality of inverting furrow slices, the uniform tillage depth and width of soil furrows depending on stable plowing of the machine. Soil pre-

(1) Part of this paper was presented at Annual Meeting of Agricultural Machinery Society, Japan in 1986.
(2) This paper is Part IV of the research study on basic design theories of hand tractors and plows for Asian paddy fields.
(3) Mr. Surin Phongsupasamit is from the Mechanical Engineering Department, Faculty of Engineering, Chulalongkorn University, Bangkok 10500, Thailand.

paration for crop requirements is defined by the seedbed or rootbed preparation for planting crops, the optimum tillage depth for better crop growth and so forth. The plowing performance is determined by the convenience in plowing with less fatigue and the field efficiency of plows. Therefore, those technical relationships between the whole machine, including the human engineering have to be considered along with the three basic situation on the field.

The authors observe that if design engineers develop the plow without considering the whole machine and human engineering, the machine will become unstable in plowing and have low efficient working. Consequently, the plowmen are exhausted easily in stabilizing the machine while at work.

Types of Japanese Plows for Hand Tractors

Japanese plows for hand tractors were developed in the 1950s and 1960s on the basis of animal-draft plows and mainly used for paddy cultivation. During the same period, the hand tractor was extremely popular in the country because those plows with economical hand tractors proved very acceptable and appropriate for the small-scale family farms in Japan.(1) The Japanese plows (**Fig. 1**) are divided into four types as follows:(4)

- plows
  - single plow (one-stage plow)
    - 1. ordinary plow
    - 2. turn-wrest plow (Japanese reversible plow)
  - double plows - - - (not in use, although developed)
  - plow with a jointer (two-stage plow)
    - 3. ordinary plow
    - 4. turn-wrest plow (Japanese reversible plow)

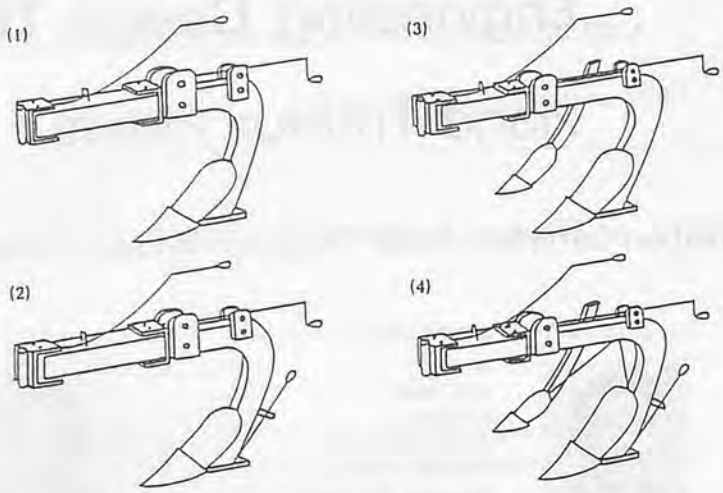

Fig. 1 Types of Japanese hand-tractor plows.

The turn-wrest plows of one-stage and two-stage were popularly used. Because of continuous return-plowing method, the most convenient plowing method in small paddy field lots, could be applied.(2) At present, a few units of them are still used in Japan. Thus, Japanese engineers are not as interested anymore in hand-tractor plows as the demand for such plows decreased considerably due to the popularity of expensive, bigger riding tractors with rotary tillers since the 1970s to the 1980s. Therefore, it can be said that the basic technology of hand tractor plowing in Japan is disappearing, and no plow scientists are interested to transfer plowing technology and design know-hows to developing countries where animal-powered farming is dominant. Some Japanese plows were only exported to developing countries, and the plows (**Fig. 2**) are difficult to fabricate by local blacksmiths because of too much advanced structure of mass production technology.

Fig. 2 Japanese turn-wrest plow in mass production.

Basic Design-Theories of Hand-Tractor Plows

The primary analysis of design theories should be applied on regular and standard plowing forms of the machine. The machine on the field is always in inclined position in three dimensions as shown in **Figs. 3** and **6**. However, a "hand-free plowing" position when the machine is in motion is the best combination of a perfect balanced condition of external forces acting on the machine by means of reasonable adjustment of machine elements.

Under such a situation, design equations should be obtained in order to achieve perfect drawings of planning design expressed by three dimensional views of side, top and front or rear views in two dimensions.

The mathematical relations between the plow, the hand tractor and the plowman are separately discussed as follows: (Appendix for symbol marks in analysis.)

Relation of Plow with Hand Tractor as Auxiliary View

Deviating Angle η and Stabilizing Clearance Δl

In standard plowing, as shown in **Fig. 3** projected from the view X in **Fig. 7**, the setting direction of the hand tractor must slightly deviate from the side of plowed land in order to make the hand tractor always travel straight and stable.

The reason is that the hand tractor has a tendency to travel towards the side of unplowed or plowed land if it is set along the plowing direction. This is because the soil resistance acting upon the plow and gross-tractions produced by driving wheels always fluctuate. Therefore, in order to avoid the hand tractor traveling on the plowed land, it must be set with a deviating angle to the side of the unplowed land. Under such a condition, the traveling action of the tractor to the unplowed land along the setting direction is prevented by the furrow wall against the inside lugs of the driving wheel **(Fig. 4)** on plow-pan surface. As a result, the hand tractor travels straight along the furrow in the plowing direction.

The authors propose to name the horizontal angle η between the setting and plowing directions "deviating angle". In general, this angle is set in the range of 4 to 6 degrees.(5) The deviating angle η equals $\sin^{-1}(\sin \eta' \cos \theta')$ as θ' is the inclined angle of the machine **(Fig. 7)** and the angle η' can be adjusted easily by giving the optimum clearance Δl between the hand-tractor hitch and the plow yoke by means of two stabilizer bolts **(Fig. 5)**. The value of Δl is 10 to 15 mm in general, when l_b is 100 to 130 mm. It is one of the key points in machine setting in hand tractor plowing. The authors propose to name this important clearance "stabilizing clearance" of the stabilizer bolts of the plow yoke in hand tractor plowing. This hitching system is similar to a one-point tubular sleeve attachment system.(6)

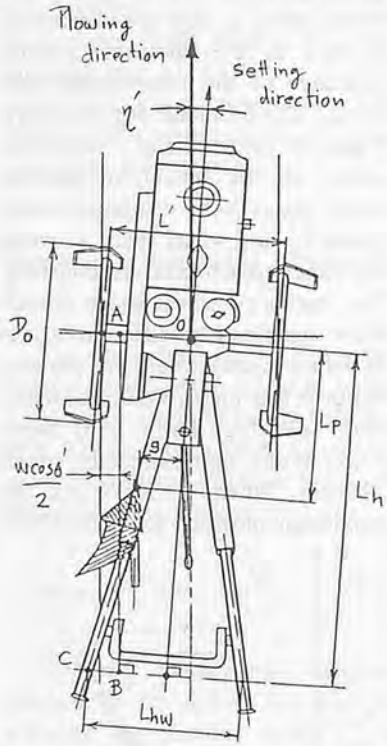

Fig. 3 The whole machine in the best and standard plowing form projected in perpendicular to the wheel axle.

Fig. 4 A travelling wheel on plow-pan.

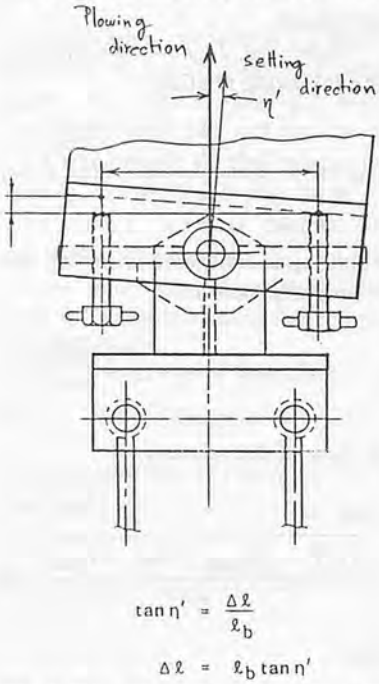

Fig. 5 Plow yoke with stabilizing clearance Δ.

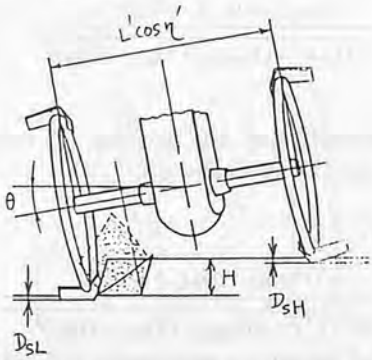

Fig. 6 Determination of inclined-angle ϑ.

Side-Swing Distance : S

The side-swing distance of the plow point S, the tip of the plowshare, in standard plowing **(Fig. 16)** is computed from the following equation when the hitch-pin is approximately vertical:

$$S = oc - ob - W \cos \theta$$

$$S = (L' \cos \eta')/2 - L_y \sin \eta' - W \cos \theta \quad \ldots\ldots\ldots (1)$$

From Eq. (1), the side-swing distance of the plow point S de-

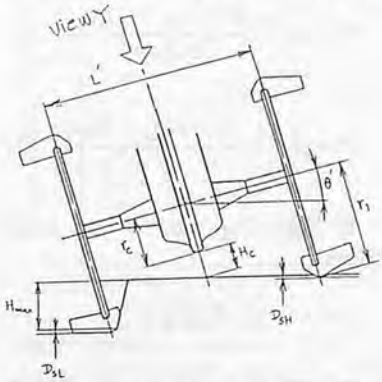

Fig. 7 Determination of maximum plowing depth H_{max}.

pends upon five parameters, and θ is determined from Eq. (2). The calculated values of the side-swing distance S of the plow point comes in the range of 14 to 19 cm when various values of L_y (10 to 40 cm), η' (5 to 7 degrees), θ (11 to 15 degrees), L′ (70 cm) and W (16 cm) are substituted into Eq. (1). Therefore, the optimum value of S can be decided according to the hand tractor specifications as L_y, L′ and plowing conditions as η', θ and W.

In the first and last pass plowing, the plowshare has to be swung behind a driving wheel in order to plow the edges of paddy fields. In such a case, the maximum side-swing distance of the plow point S_{max} is shown in **Fig. 9**.

Relation of Plow to Hand Tractor as Rear View

Inclined-Angles θ and θ' of Wheel Axle

In standard plowing with the hand-tractor plow, the wheel axle of the hand tractor slightly inclines from the horizontal line. There are two inclined-angles of the wheel axle: one is projected along the plowing direction θ **(Fig. 6)**; and the other is projected along the machine setting direction θ' **(Fig. 7)**.

The inclined-angles θ and θ' are given by

$$\theta = \sin^{-1}\left(\frac{H + D_{sL} - D_{sH}}{L'\cos\eta'}\right) \quad (2)$$

and

$$\theta' = \sin^{-1}\left(\frac{H + D_{sL} - D_{sH}}{L'}\right) \quad (3)$$

If D_{sL}, D_{sH} and η' are small values,

$$\theta = \theta' = \sin^{-1}(H/L')$$

θ in general is 12 to 15 degrees when H is 15 to 18 cm with 70 cm L′.

Maximum Plowing Depth H_{max} vs. Hand Tractor Specifications

In standard plowing, the maximum plowing depth of hand-tractor plows cannot be decided only by the plow structures because the lowest point of transmission case of hand tractors must not be pushed on the field surface. **Figure 7** is transversely projected along the machine setting direction showing the allowable ground clearance H_c of the transmission which should be more than 5 cm.

The relation between the maximum plowing depth H_{max} vs. hand tractor specifications is determined as follows:

From **Fig. 7**, we can formulate the following relation:

$$\tan^{-1}\theta' = \frac{r_1 - \left(r_c + H_c + \frac{D_{sH}}{\cos\theta'}\right)}{L'/2} \quad (4)$$

Then, r_1 is computed from the following expression:

$$r_1 = \frac{1}{2}(L'\tan\theta') + r_c + H_c + \frac{D_{sH}}{\cos\theta'} \quad (5)$$

In view of the relation,

$$\cos\theta' = \frac{\sqrt{(L')^2 - (H_{max} + D_{sL} - D_{sH})^2}}{L'} \quad (6)$$

and

$$\tan\theta' = \frac{H_{max} + D_{sL} - D_{sH}}{\sqrt{(L')^2 - (H_{max} + D_{sL} - D_{sH})^2}} \quad (7)$$

Substituting Eqs. (6) and (7) into Eq. (5) we finally get:

$$r_1 = \frac{L'(H_{max} + D_{sL} + D_{sH})}{2\sqrt{(L')^2 - (H_{max} + D_{sL} - D_{sH})^2}} + r_c + H_c \quad \ldots\ldots\ldots\ldots (8)$$

Then, the maximum plowing depth is computed from the following equation:

$$H_{max} = \frac{2L'C\sqrt{(L')^2 + 4C^2 - 4(D_{sH})^2} - (L')^2(D_{sL} + D_{sH}) + 4C^2(D_{sL} - D_{sH})}{(L')^2 + 4C^2} \quad \ldots\ldots\ldots\ldots (9)$$

where

$$C = r_1 - r_c - H_c$$

From Eq. (9), H_{max} depends on three parameters of hand tractor specifications, wheel space L′, wheel raidus r_1 and the distance r_c as well as the allowable ground clearance of the transmission case H_c and wheel sinkage D_{sL} and D_{sH}. **Figure 8** shows the calculated values of the maximum plowing depth H_{max} with various of wheel radius r_1 and wheel space L′ when the other parameters are constant. The curves of wheel space do not show significantly different values of wheel radius when the plowing depth is less than 25 cm. The maximum plowing depth is 0 when wheel radius approximately equals 21.5 cm. When L′ is 70 cm, the maximum plowing depth of 15 cm

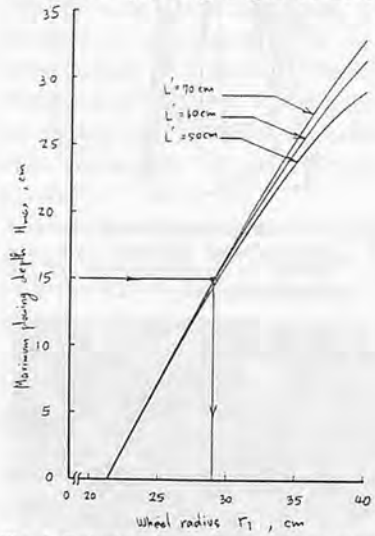

Fig. 8 Relation between maximum plowing depth and wheel radius and wheel space L′ (r=10 cm, Hc= 10 cm, DsL=1 cm, DsH=2 cm).

correlates to 29.0 cm of wheel radius. However, in a case of soft paddy fields, both driving wheels will sink and travel on the plow-pan surface. Therefore, in such a condition when the plowing depth is 15 cm, the optimum wheel radius is 35 cm.

All these dimensions as a case study concern drive-type hand tractors of 7 to 8 PS water-cooled diesel engines. Not all but some of these dimensions should be approximately proportional to engine PS. For example, the diameter of iron wheels for drive-type hand tractors in Japan is 60 cm to 70 cm, in general. That for traction-type hand tractors of 4 to 6 PS air-cooled engines (high octane kerosene engines) was 55 to 60 cm at that time, and their plows were also smaller and economical than that of drive-type hand tractors.

Maximum Side-Swing Distance: S_{max}

The plow-share has to be swung behind each driving wheel in order to plow the edges of paddy field lot (**Fig. 9**). In such a case, the maximum side-swing distance S_{max} of the plow point is given by

$$S_{max} = \frac{L'}{2} + L_o + \frac{H'}{\tan\delta} \quad . . \quad (10)$$

In order to prevent excessive massing of the soil at the start of plowing the plowing depth H′ is usually set about a third of that in standard plowing and the machine should travel at higher speed than the normal plowing speed so that better inverting performance of the successive furrow slices will be achieved. The profile angle δ in standard plowing of Japanese plow-shares is 95 to 110 degrees.

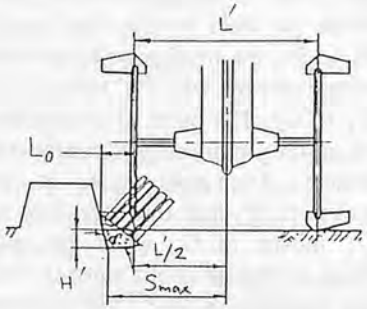

Fig. 9 Determination of distance S_{max}.

The value of S_{max} is one of parameters for deciding the horizontal distance of swing beams L_b. The length L_b should be larger than L′/2 but the swing-beam ends must not be in the range of plowmen's step.

Height of Higher Hand Grip: H_{hL}

In standard plowing, the plowman has to touch slightly on hand grips and walk behind the hand tractor on plow-pan surface. Therefore, the height of the hand grips should be decided in the range of comfortable working manner of plowmen. The height H_{hL} of the higher hand grip (**Fig. 10**) in this case is computed from the following equation:

$$H_{hL} = H_{hR} + L_{hw}\cos\eta' \sin\theta \quad (11)$$

Substituting Eq. (2) into Eq. (11), we finally get:

$$H_{hL} = H_{hR} + L_{hw}\left(\frac{H + D_{sL} - D_{sH}}{L'}\right) \quad . . . . . (12)$$

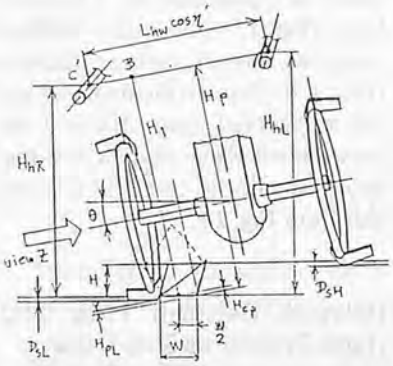

Fig. 10 Determination of distance H_{pL} and H_p.

The value of H_{hL} depends on six parameters. And the height of the lower than grip H_{hR} can be assumed to be 75 cm to 85 cm as the height for standard plowing. Moreover, the width of hand grips should be 60 cm to 65 cm for handling the machine effectively. **Figure 11** presents the calculated values of the hand grip height H_{hL} with various values of plowing depth H, hand grip height H_{hR} and wheel space L′. The height H_{hL} is recommended to be 90 cm to 110 cm.

Effective Height of Hand Grips: H_p

It is accurate and convenient to form side-view planning design of hand-tractor plows by projecting along the wheel axle. Then, the relation between the plow point and hand grips H_p has to be determined after the height of higher hand grip H_{hL} was decided. The value of H_p is determined as follows:

The line AB is drawn parallel to the plowing direction and bisects the plowing width W cos θ′ (**Fig. 3**).

The rear view of the whole machine in **Fig. 10** shows the necessary points associated to that in **Fig. 3**.

From **Fig. 10**, H_p is computed from the following expression:

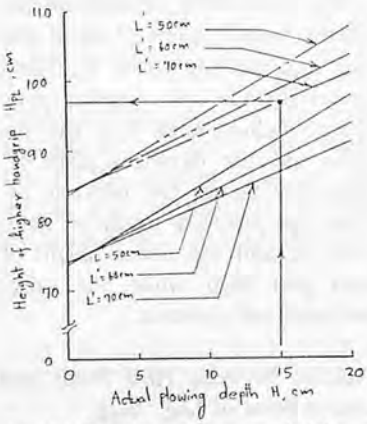

Fig. 11 Relation between height of higher hand grip and actual plowing depth, height of lower hand grip and wheel space (D_{sL}= 1 cm, D_{sH}=2 cm).

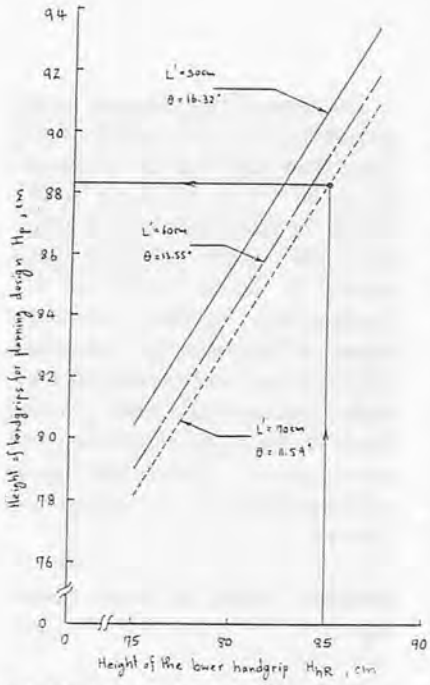

Fig. 12 Relation between H_P and H_{hR} with various values of wheel space L' and inclined-angle (H=15 cm, D_{sL}=1 cm, D_{sH}= 2 cm).

$$H_p = H_1 + H_{cp} \quad \ldots\ldots\ldots \quad (13)$$

and since

$$H_1 = \frac{H_{hR}}{\cos\theta} \quad \text{and} \quad H_{cp} = \frac{W\sin\theta}{2}$$

Then, we obtain:

$$H_p = \underbrace{\frac{H_{hR}}{\cos\theta}}_{\textit{(lower hand grip factor)}} + \underbrace{\frac{W\sin\theta}{2}}_{\textit{(plowing width factor)}} \quad \ldots \quad (14)$$

The value of H_p depends on two factors; lower height of hand grip H_{hR} and plowing width W. These factors include two angular parameters; inclined-angle θ of the machine and the deviating angle η'. **Figure 12** shows the relation between the effective height of hand grips H_p and the lower height of hand grip H_{hR} while the other parameter are constant.

Relation between Plow Point and Lowest Point of Lug : H_{pL}

The theoretical relative location between the plow point and the lowest point of the lug traveling on

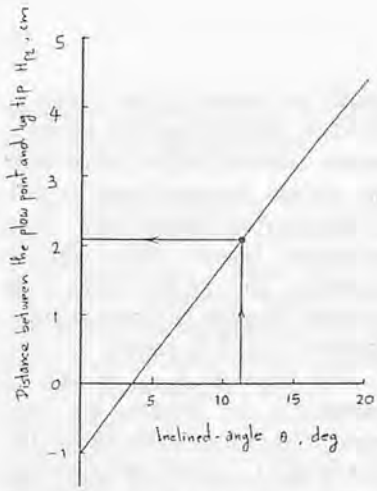

Fig. 13 Relation between distance H_{pL} and inclined-angle of machine (W=16 cm, D_{sL}=1 cm).

plow-pan surface (**Fig. 10**) is determined from the following expression:

$$H_{pL} = W\sin\theta - \frac{D_{sL}}{\cos\theta} \quad \ldots\ldots \quad (15)$$

Figure 13 presents the relation between the calculated value of H_{pL} and various inclined-angle θ while the plowing width and sinkage of the lower wheel are constant. For example in normal paddy fields of good irrigation and drainage functions in Japan, plowing conditions might be as follows; plowing width is 16 cm, wheel sinkage D_{sL} and D_{sH} are approximately 1 cm and 2 cm, respectively. Therefore, when the wheel space L', plowing depth H and deviating angle η' are 70 cm, 15 cm and 5 degrees, the calculated inclined-angle θ from Eq. (2) is 11.6 degrees which is correlated to 2.1 cm of H_{pL} (**Fig. 13**). In many tropical countries, wheel sinkage changes from 1 to 2 cm to the depth of top soil in rain-fed areas. When θ becomes small value, H_{pL} in planning design should be carefully selected also from **Fig. 13**.

Relation Between Plow and Hand Tractor as Side View

Horizontal Distance of Plow Point to Wheel Axle : L_p

Fig. 14 Problem of plowing with hand tractor having long handles (Source: Business in Thailand, Aug. 1984, Vol. 15, No. 8).

The relative location of the plow to the hand tractor in the side view, from view Y in **Fig. 10**, also plays an important role to plowing performance. Because the location of the rear-end portion of the plow must not be in the range of the plowman's step in plowing. And the plowman has to lift the plow point above the field surface by lifting the handles when the hand tractor turns on headlands in continuous return plowing or in order to inspect the plow during plowing. In such cases, if the plow point is located near the driving-wheel axle of the hand tractor and its handle is too long, the hand grips have to be lifted so high in order to raise the plow point above the field surface as shown in **Fig. 14**. In such a situation, it is inconvenient for the plowman to work.

Therefore, the relative distance L_p of the plow point to the wheel axle (**Fig. 15**) has to be decided carefully in consideration of the whole machine structure as well as plowing conditions.

Figure 15 is a side-view of the whole machine projected in parallel to the wheel axle as indicated as view Z in **Fig. 10**. Considering the optimum location of the plow point in standard plowing, when the plow point is elevated just above the field surface from point P_1 to P_2, the hand grips have to be raised upward with H_L from point G_1 to G_2. The point O is considered as the origin of X-Y coordinate system. The plow point at P_1 moves to P_2 and the hand grip at G_1 moves to G_2 when the machine is rotated about point O with the rotating angle ϕ. The relation between the coordinates $P_1(px_1, py_1)$ and $P_2(px_2, py_2)$ and also

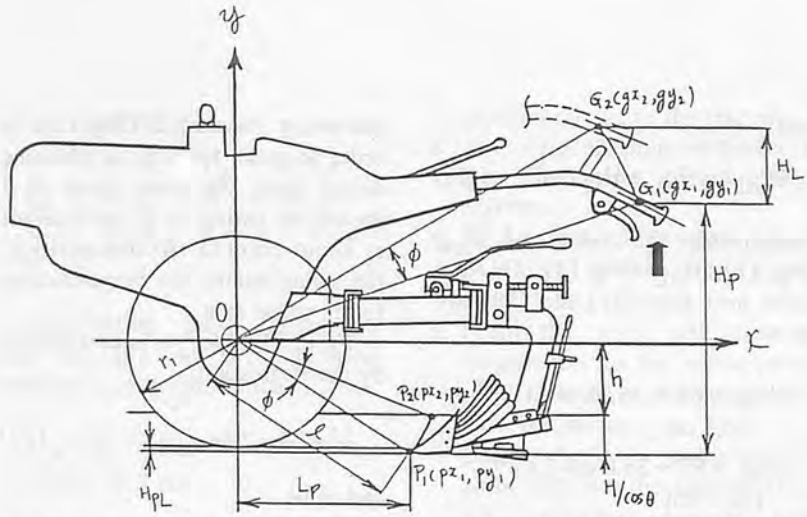

Fig. 15 Determination of distance H_L when plow point is lifted above soil surface.

$G_1(gx_1, gy_1)$ and $G_2(gx_2, gy_2)$ are given by

$$\begin{pmatrix} px_2 \\ py_2 \end{pmatrix} = \begin{pmatrix} \cos\phi & -\sin\phi \\ \sin\phi & \cos\phi \end{pmatrix} \begin{pmatrix} px_1 \\ py_1 \end{pmatrix} = \begin{pmatrix} px_1\cos\phi - py_1\sin\phi \\ px_1\sin\phi + py_1\cos\phi \end{pmatrix} \quad \ldots\ldots (16)$$

and

$$\begin{pmatrix} gx_2 \\ gy_2 \end{pmatrix} = \begin{pmatrix} \cos\phi & -\sin\phi \\ \sin\phi & \cos\phi \end{pmatrix} \begin{pmatrix} gx_1 \\ gy_1 \end{pmatrix} = \begin{pmatrix} gx_1\cos\phi - gy_1\sin\phi \\ gx_1\sin\phi + gy_1\cos\phi \end{pmatrix} \quad \ldots\ldots (17)$$

The value of $H/\cos\theta$ is computed from the following expression:

$$\frac{H}{\cos\theta} = py_2 - py_1 \quad \ldots\ldots (18)$$

Substituting Eq. (16) for py_2 into Eq. (18) and after transforming, we get.

$$px_1\sin\phi + py_1\cos\phi = py_1 + \frac{H}{\cos\theta} \quad \ldots\ldots (19)$$

When the rotating angle ϕ is greater than 0 but less than 90°, the values of $\sin\phi$ and $\cos\phi$ from Eq. (19) are given by

$$\sin\phi = \frac{px_1(py_1 + \frac{H}{\cos\theta}) - py_1\sqrt{px_1^2 + py_1^2} - (py_1 + \frac{H}{\cos\theta})^2}{px_1^2 + py_1^2} \quad \ldots\ldots (20)$$

$$\cos\phi = \frac{py_1(py_1 + \frac{H}{\cos\theta}) + px_1\sqrt{px_1^2 + py_1^2} - (py_1 + \frac{H}{\cos\theta})^2}{px_1^2 + py_1^2} \quad \ldots\ldots (21)$$

Accoring to **Fig. 15**, we get:

$$l = \sqrt{px_1^2 + py_1^2}$$

$$h = py_1 + \frac{H}{\cos\theta}$$

Then, the values of $\sin\phi$ and $\cos\phi$ is reformulated by the following equations:

$$\sin\phi = \frac{px_1 h + py_1\sqrt{l^2 - h^2}}{l^2} \quad \ldots\ldots (22)$$

$$\cos\phi = \frac{py_1 h + px_1\sqrt{l^2 - h^2}}{l^2} \quad \ldots\ldots (23)$$

From **Fig. 15**, the value of H_L is computed from the relation:

$$H_L = gy_2 - gy_1 \quad \ldots\ldots (24)$$

Substituting Eq. (17) for gy_2 into Eq. (24), we get:

$$H_L = gx_1\sin\phi + gy_1\cos\phi - gy_1 \quad \ldots\ldots (25)$$

Then, by substituting Eqs. (22) and (23) into Eq. (25), H_L is finally given by

$$H_L = \frac{h(gx_1 px_1 + gy_1 py_1) - (gx_1 py_1 - gy_1 px_1)\sqrt{l^2 - h^2} - gy_1 l^2}{l^2} \quad \ldots\ldots (26)$$

The value of H_L in Eq. (26) depends on six parameters, including the effective distance of the plow point to the wheel axle L_p or px_1. The values of gy_1 and py_1 can be determined from the values of H_p, r_1 and H_{pL} and gx_1 which is the length of hand-tractor handles. Moreover, the machine inclined-angle θ is computed from the decided parameters as well as the plowing depth H. Therefore, H_L is computed by assuming the value of px_1. However, the calculated value of H_L must not be large. Otherwise, it is inconvenient for plowmen to lift the hand grips in turning the tractor.

For example:

H_p : 88 cm (**Fig. 12**),
H_{pL} : 2 cm (**Fig. 13**),
θ : 11.59°, r_1 : 35 cm,
H : 15 cm, L_h : 135 cm

Therefore, gx_1, gy_1 and py_1 equal 135 cm, 51 cm and–37 cm respectively. By assuming L_p or px_1 49 cm and substituting all those parameters into Eq. (26), H_L is:

$$H_L = \frac{-102\,536.1 + 430\,473.6 - 192\,268.0}{3770.0} = 36.0 \text{ cm}$$

Hence, in order to lift the plow point above the field surface in

turning the machines, the total heights of both lower and higher hand grips are computed from the following expressions:

$$H'_{hR} = H_{nR} + H_L \cos\theta \quad . . \quad (27)$$

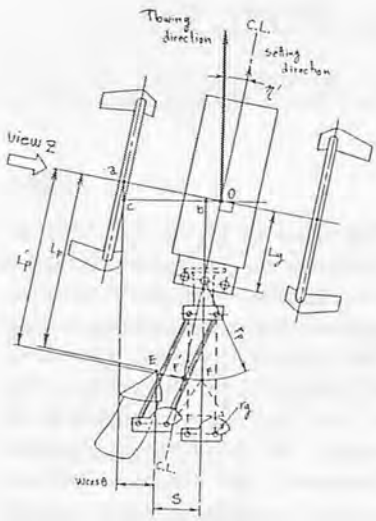

Fig. 16 Determination of distance S and L'p.

and

$$H'_{hL} = H_{hL} + H_L \cos\theta \quad . . \quad (28)$$

Substituting the values of H_{hR} (**Fig. 11**), H_{hL} (**Fig. 11**), H_L and $\cos\theta$ into Eqs. (27) and (28), we get:

$$H'_{hR} = 85 + 36.0 \cos 11.59^\circ = 120.3 \text{ cm}$$

$$H'_{hL} = 97 + 36.0 \cos 11.59^\circ = 132.3 \text{ cm}$$

These heights are not so high that plowman can easily handle the hand tractor. The value of H'_{hR} and H'_{hL} is recommended to be the height of human shoulder in order to support handles easily in hand tractor design know-how.

Horizontal Distance of Plow Point to Wheel Axle : L'_p

In standard plowing, the plow point is located at point E with side-swing distance S (**Fig. 16**). In order to make the way of planning design easy, the plow point at F should be swung to F' with radius r_p about point O'. At that position, the swing beams are perpendicular to the wheel axle.

From **Fig. 16**, L'p is determined by the expression:

$$L'_p = L_y + r_p \quad . . . . . \quad (29)$$

and since

$$r_p = \frac{1}{\cos\eta'}(L_p - L_y) + L_b - \sqrt{L_b^2 - S^2} - S \tan\eta'$$

Then, the value of L'_p is computed from the following equation:

$$L'_p = L_y + \frac{1}{\cos\eta'}(L_p - L_y) + L_b - \sqrt{L_b^2 - S^2} - S \tan\eta' \quad . . . . . \quad (30)$$

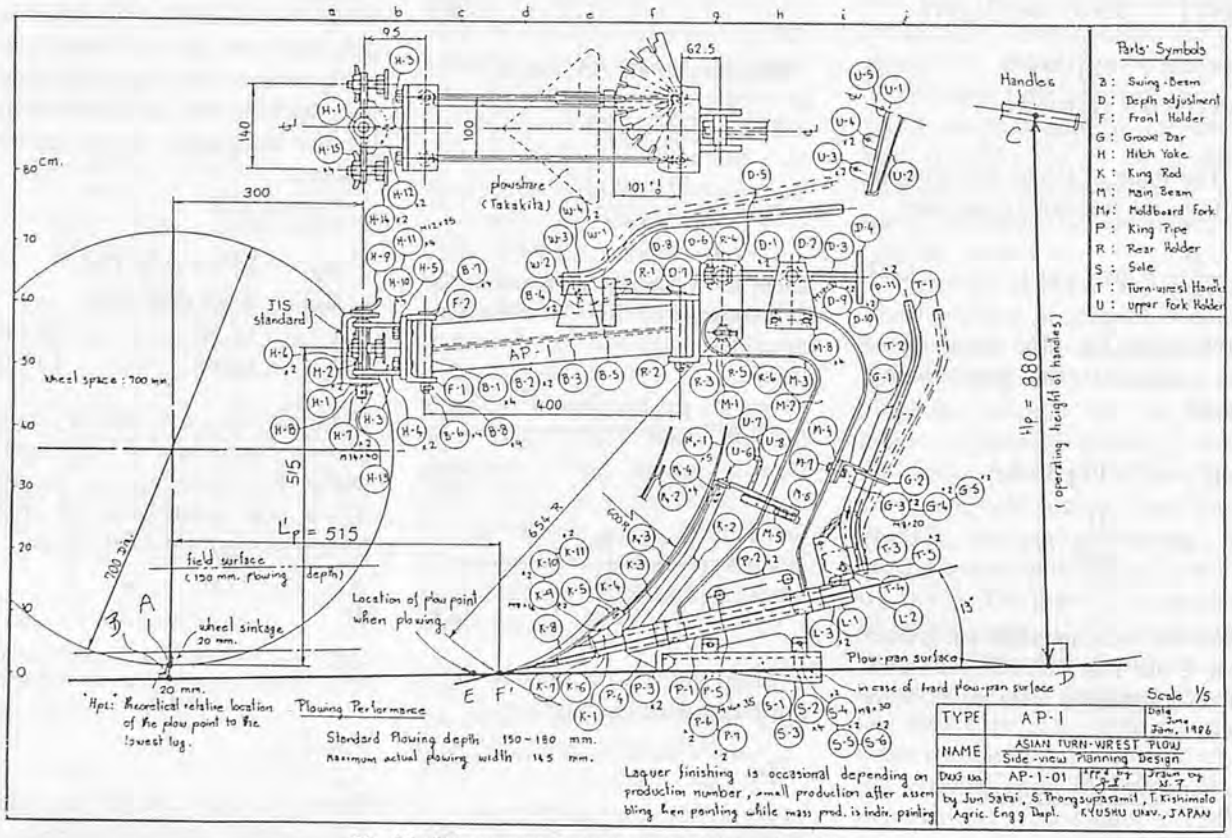

Fig. 17 Side-view planning design of turn-wrest plow.

For example:

L' : 70 cm L_b : 40 cm,
L_y : 30 cm W : 16 cm,
L_p : 49 cm, θ : 11.59°,
η' : 5°

Substituting these parameters into Eq. (1), we get side-swing distance S, 16.6 cm. Hence, L'_p is

$$L'_p = 30 + 19.1 + 40 - 36.4 - 1.45 = 51.3 \text{ cm}$$

This length is suitable because the length F'D (83.7 cm) is sufficient for designing the plow base, having the position of plow-sole end byond the range of plowmen's step.

"Whole Planning Design"

Figure 17 shows a side-view of the whole planning design, projected from view Z in **Fig. 16**, of a turn-wrest plow for a hand tractor. The plow is designed in consideration of technical relationship between the whole machine involved in plowing as well as human engineering. Those relationships are expressed in mathematical equations with many parameters of machine specifications, including plowing conditions, especially on lowland paddy fields.

The first important step in whole planning design is to decide the suitable location of the plow point in relation to the hand tractor when the whole machine is operated in the best and standard plowing forms. The following steps show the layout of whole planning design by using necessary parameters which are already computed as follows: (case study for only 7 to 8 PS one)

1. Draw a circle of wheel radius r_1, 350 mm.
2. Draw the vertical and horizontal lines passing the wheel center and also draw the hand-tractor hitch and handles on the correct location related to the tractor.
3. At the middle point of the hand grip, draw an arc of radius H_p, 880 mm.
4. At the lowest point of the wheel (A), draw a vertical line (AB) equal to H_{pL}, 20 mm.
5. From the point (B), draw a tangent line to the arc at point (D); this line represents the plow-pan surface.
6. Locate the plow point at the point (F') on the line (BD) at the horizontal distance L'p, 515 mm. However, it should be mentioned that the plow point is moved to the point (E) in standard plowing.
7. At the point (F'), draw the line (F'G) with angle 13 degrees to the line (BD); the line (F'G) represents the axis of "king rod" named by the authors.

Then the rational location of the plow point (F') is decided. The following steps of "detail planning design" are to design plow structures; a plow yoke, swing-beam mechanism, plowing width and depth control mechanism, a main beam, turn-wrest mechanism, a plowshare, finger moldboards, a sole and so forth. These will be discussed after the presentation of engineering design theories of plowing wheels for hand tractors.

Conclusions

1. Hand-tractor plows were developed well in Japan in the 1950s and 1960s. The turn-wrest single plow was used popularly. Unfortunately, plowing technology and design know-how of such plows are disappearing and no technology of Japanese plow science has been transferred to developing countries.
2. Designers have to consider not only the plow structures but also hand tractors, wheels and human engineering which are involved in plowing in order to realize an efficient and stable plowing.
3. The maximum plowing depth of hand-tractor plows in designing, as expressed in Eq. (9), cannot be decided by considering only the plow structures because its value depends on six parameters; three are hand-tractor specifications and the others are plowing conditions.
4. In standard plowing, the heights of both left and right hand grips are not equal, and they should be decided in the range of comfortable working of plowmen.
5. The effective height of hand grips for planning design H_p depends on seven parameters which are grouped into two factors: (i) the lower hand grip and (ii) the plowing width.
6. The plow point is located lower than the lowest point of the lug traveling on the plow-pan surface in standard plowing when the machines are projected in parallel to the wheel axle.
7. The plow point has to be located at a proper horizontal distance L_p from the wheel axle in standard plowing so that the plowman can raise it above the soil surface by lifting the handles in turning the tractor or inspecting the plow; otherwise, the plowman will encounter difficulty in handling the machines. The lifting height H_L, as expressed in Eq.(26), is computed by assuming the effective distance L_p and substituting values of five parameters.
8. In order to lay out "whole planning design" easily, the center line of the plow should be set perpendicularly to the wheel axle of the hand tractor by shifting the plow from standard plowing position to align with the center line of the hand tractor. In such a position, the horizontal distance L'_p, as expressed in Eq.(30), is effective to locate the plow point.

APPENDIX I Symbols

Symbol	Interpretation	Units
D_o	Outside diameter of a wheel	cm
D_{sH}	Sinkage of the higher wheel	cm
D_{sL}	Sinkage of the lower wheel	cm
H	Plowing depth	cm
H'	Shallow plowing depth	cm
H_c	Allowable ground clearance between transmission case and soil surface	cm
H_{cp}	Perpendicular distance between the plow point and a point bisected plowing width	cm
H_{hL}	Height of the higher hand grip from plow-pan surface to the higher hand grip	cm
H'_{hL}	Height of the higher hand grip from lifting	cm
H_{hR}	Height of the lower hand grip from plow-pan surface to the lower hand grip	cm
H'_{hR}	Height of the lower hand grip after lifting	cm
H_{max}	Maximum plowing depth	cm
H_p	Perpendicular distance between the plow point to hand grip for planning design	cm
H_{pL}	Perpendicular distance between the plow point and the lower point of the lug	cm
H_L	Vertical lifting height of hand grips	cm
Δl	Stabilizing clearance of stabilizer bolts	cm
l_b	Distance between stabilizer bolts	cm
L'	Wheel space ; distance between lug tips of left and right wheels	cm
L_b	Swing-beams length	cm
L_h	Handle length ; horizontal distance between the wheel axle and hand grips	cm
L_{hw}	Hand grip width	cm
L_o	Outside width of a lug	cm
L_p	Horizontal distance between the plow point and the wheel axle	cm
L'_p	Horizontal distance between the plow point and the wheel axle for planning design	cm
L_y	Horizontal distance between the wheel axle and the hitch-pin center	cm
r_c	Distance between the wheel axle and the lowest point of transmission case	cm
r_1	Outside radius of a wheel	cm
S	Side-swing distance of the plow point from the plow point to the machine center line	cm
S_{max}	Maximum side-swing distance of the plow point from the plow point to the machine center line	cm
W	Actual plowing width	cm
δ	Profile angle of a plowshare in standard plowing	deg
η	Deviating angle between plowing direction and setting direction	deg
θ	Inclined-angle of hand tractor transversely projected along the plowing direction	deg
θ'	Inclined-angle of hand tractor transversely projected along the setting direction	deg
ϕ	Rotating angle of the wheel axle	deg

REFERENCES

1. Sakai, J., Phongsupasamit, S. and Kishimoto, T. 1986. Studies on Evolutional Steps for Plowing and Tractorization in Japan, – The Unique Mechanization Promotion in Small-Scale Farming –, AMA, Vol. 17, No. 4, pp. 11-19.
2. Sakai, J., Phongsupasamit, S. and Kishimoto, T. 1987. Study on Basic Knowledge of Plowing Science for Asian Lowland (Paddy Field) Farming, – Plow Structures Related to Plowing Principles –, AMA, Vol. 18, No. 1, pp. 11-18.
3. Sakai, J., Phongsupasamit, S. and Kishimoto, T. 1987. Studies on Basic Knowledge of Plowing Science for Asian Lowland-Paddy Farming, – Appropriate Plow Structures for Farming Requirements –, AMA, Vol. 18, No. 2, pp. 11-17.
4. Sakai, J. 1984. Technological Characteristics of Japanese Animal-Drawn Ploughs for Mechanizing Small Farms, National Symposium of Machinery for Agriculture, The Institute of Engineers, Sri Lanka, pp. 8-10.
5. Phongsupasamit, S. and Sakai, J. 1987. Technology Transfer Problems for Mechanizing Small-Scale Family Farms in Thailand, – Tillage and Tractorization –, International Symposium on Agriculture Mechanization and International Cooperation in High Technology Era, Japanese Society of Agricultural Machinery, Tokyo, p. 548.
6. ASAE Standards 1986. ASAE S 348.1, One-Point Tubular Sleeve Attachment for Hitching Implements to Lawn and Garden Ride-On Tractors, The American Society of Agricultural Engineers, pp. 303-331. ■■

Development of Improved Agricultural Implements at ICRISAT

by

N.K. Awadhwal
Agric. Engineer
International Crops Res. Inst. for the Semi-Arid Tropics
Patancheru, Andhra Pradesh 502324
India

T. Takenaga
Princpal Agric. Engineer
ICRISAT
Patancheru, Andhra Pradesh 502324
India

R.K. Bansal
Agric. Engineer
ICRISAT
Patancheru, Andhra Pradesh 502324
India

Abstract

Farm machinery development at the International Crops Research Institute for the Semi-Arid Tropics (ICRISAT) is need-based for an improved farming system. Emphasis is laid on efficient use of animal power. Good progress has been made in the development of three types of multipurpose animal-drawn wheeled tool carriers with a variety of implements that range in versatility, comfort and cost. A four-row planter with a fertilizer applicator, low and ultra-low volume sprayers, and crust breakers have also been developed to meet specific requirements of farmers of the semi-arid tropics. ICRISAT provides design drawings and technical advice to interested manufacturers.

Introduction

The semi-arid tropics (SAT) cover a large area of Africa and parts of Asia, Latin America, and Australia. They are characterized by undependable and variable rainfall and soils that are generally poor in fertility. Consequently, farming involves a high risk due to frequent crop failures that makes farmers reluctant to invest in modern inputs such as seed of high yielding varieties, fertilizer, improved implements, pesticides, etc., which can increase crop production.

One of the greatest challenges for agricultural scientists in the SAT is to develop technically feasible and economically viable improved farming systems that can substantially increase the yields and stabilize production. The ICRISAT has given considerable attention to increasing the productivity of deep Vertisols and evolved a set of broad principles for their management. This approach is called as Improved Vertisol Management Technology (IVMT) and consists of the following three major components (Virmani et al. 1981):

1. Land-management practices that reduce runoff and erosion and provide adequate surface drainage to improve workability.
2. Cropping systems and crop management practices that establish a crop early in the rainy season to make efficient use of the rainfall.
3. Implements for cultivation, seeding and fertilizer application that enable the required land and crop management practices to be carried out properly and in time.

In most of the developing countries in the SAT region, farmers use indigenous wooden implements, referred to as 'traditional' in this paper. These traditional implements generally lack precision and speed and thus fail to make efficient use of draft animals. As a consequence, important operations, such as sowing and inter-row cultivation, are often delayed resulting in overall low productivity. Research and development of improved agricultural equipment at ICRISAT aims to enhance the efficiency of farm inputs and operations. Special attention is being given to the use of animal power, a major source of power needed for crop production operations in many SAT regions (Stout and Downing, 1975). In general, the approach has been to develop multipurpose machines rather than single-operation implements. This paper summarizes the progress made in farm machinery development at ICRISAT.

Wheeled Tool Carriers

Three types of animal-drawn wheeled tool carriers (WTCs) have been developed and tested at ICRISAT to meet the specific needs of the SAT farmers. A Tropicultor, originally designed by a French engineer (Thierstein, 1979), was modified by making a few changes in the basic machine and redesigning some of its implements. It can be converted into a 1-t capaci-

Fig. 1 A four-row planter and fertilizer drill mounted on the Nikart.

Table 1 Average Human Labor Utilization for Farm Operations in Selected Cropping Systems at Two Locations of On-farm Testing in India

unit: man-h/ha

	Taddanpally (1982-83)		Farhatabad (1982-83)	
	Traditional	Improved	Traditional	Improved
Tillage and seedbed preparation	80	46	54	72
Sowing and fertilizer application	55	14	34	16
Interrow cultivation	240	196	179	219
Plant protection	–	22	28	29
Harvesting and threshing	315	405	276	270
Total	690	683	571	606

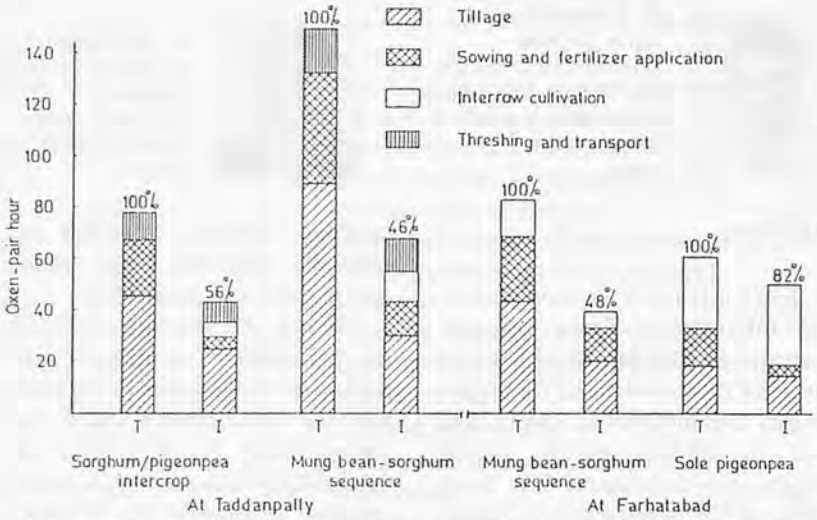

Fig. 2 Oxen-pair hours required under traditional (T) and improved (I) managements.

ty cart, using the cart frame (Bansal and Srivastava, 1981). The other WTC called Nikart was developed in collaboration with the National Institute of Agricultural Engineering, U.K. This machine is simpler to manufacture in the developing countries and therefore cheaper than the Tropicultor. It has all the versatility of the Tropicultor except its adjustable wheel tracts. Another tool carrier called the Agribar was developed with an objective to provide a basic machine at an even lower price, yet with a versatility comparable to the Tropicultor and Nikart. It has a T-frame construction and utilizes the same implements as those for the Tropicultor and Nikart. However, it cannot be converted into a cart. Details of design, use and field performance of these tool carriers have been reported in other publications (Bansal and Srivastava, 1981; Bansal and Thierstein, 1982).

Planting of crops with tool carriers had been a problem because of the unavailability of a suitable attachment. To solve this problem, a planter and fertilizer application attachment was developed that can be mounted on the Tropicultor and Nikart with an appropriate mounting frame (Fig. 1). In this attachment seed is metered by an inclined plate while fertilizer is metered by an oscillating metering mechanism. The seed-metering plates can be selected according to the crop and desired seed rate. The fertilizer application rate can be controlled by changing the position of the connecting link on a revolving disc. The floating-type soil deflectors cover the seeds and a press wheel compacts soil over them (Bansal and Rego, 1984).

These WTCs were evaluated in farmers' fields as part of ICRISAT's on-farm research activities. The planter and fertilizer application attachment were used with the Tropicultor and Nikart whereas a simple hand-metering system was used on the Agribar. The use of a WTC reduced labour input for tillage and sowing operations but the total labour input was nearly the same or slightly more than in the traditional system of cultivation (Table 1). The use of WTC resulted in 18-54% reduced input of total oxen-pair hour for all operations required for crop production (Fig. 2). Tillage and sowing operations with a WTC accounted for maximum gain because of its greater speed and wider coverage, thus better timeliness than the traditional implements. Time saving is especially important when one crop has to be sown within a short period before the onset of the monsoon followed by another crop soon after harvest of the preceding crop.

The comparative economic advantage of the WTC over traditional implements used for tillage and sowing operations, based on the data collected at Farhatabad village in Karnataka State, India, for major cropping systems is given in Table 2. In all fields where the experiments were conducted there were no differences in other operations such as inter-row weeding and harvesting. The cost saving from using a WTC was from 19 to 41% for all tillage operations and 23-39% for sowing and fertilizer application (except for a post-rainy season sole sorghum crop). The cost figures reflect saving in man and oxen-pair hours and feasibility of covering more area by one pair of oxen and a WTC.

Table 2 Comparative Cost of Tillage and Sowing by Wheeled Tool Carrier (WTC) and Traditional Implements

Cropping system[1]	Tillage			Sowing		
	WTC Rs/ha[2]	Traditional Rs/ha	WTC/ Traditional	WTC Rs/ha	Traditional Rs/ha	WTC/ Traditional
Sole PP	84	103	0.81	34	55	0.61
GG + SO	172	267	0.64	63	82	0.77
Sole SO	151	255	0.59	58	44	1.32

1:PP = Pigeonpea, SO = Sorghum, GG = Greengram

2:US$1 = Rs.12 approximately

Four-Row Planter and Fertilizer Applicator

During the field tests of the planter-cum-fertilizer attachment to a WTC, it was observed that farmers desired to have a sowing machine that is simple to adjust and use and does not require a WTC. To fulfill this need, an independent four-row planter and fertilizer applicator was developed (**Fig. 3**). It consists of a seed and fertilizer metering unit, the same as used with WTC, integrally mounted on a frame supported on two steel wheels. The metering mechanisms are driven from the left wheel of the planter. A dog-clutch disengages the drive to the metering mechanism as soon as the furrow openers are lifted. The planter has four floating furrow openers pivoted on a hollow square bar in the front and is held in position by springs at the rear. The square bar has a series of holes for adjusting the interrow spacing of the furrow openers. The depth of seeding can also be adjusted easily. The furrow openers are designed to give 3-4 cm lateral separation between seed and fertilizer. Floating-type soil deflectors followed by a press wheel ensure proper soil covering.

Fig. 3 The independent planter and fertilizer applicator.

This planter and fertilizer applicator was tested in the field. Its overall performance was very satisfactory. The average pull varied from 900 N for two rows to 1 400 N for four rows. It could sow 1 ha in 4-6 h on broadbeds depending upon the field and operating conditions.

Sprayers

Conventional knapsack sprayers require 400-600 *l*/ha of the spray solution. This requirement puts considerable hardship on a farmer who has to fetch clean water from a long distance. Hence, a reduction in the volume of water needed for spraying pesticides will mitigate some of his problems and probably give better results. Low and ultra-low volume spraying techniques reduce the spray volume requirements considerably (Takenaga, 1973). Keeping this in view, a low volume (LV) sprayer and an ultra-low volume (ULV) sprayer have been developed for testing. Both of these units were designed for mounting on a Tropicultor and are suitable for pesticide application.

Low Volume Sprayer

The low volume (LV) sprayer (**Fig. 4**) consists of a 100 *l* capacity fibre glass tanks, a reciprocating pump, a pressure regulator, a pressure gauge, cut-off valves, and a spray boom with nozzles. The entire assembly is mounted on the Tropicultor. The boom length is 4.5 m and can be fitted with 6 to

Fig. 4 Low-volume sprayer mounted on the Tropicultor.

10 nozzles depending on the row spacing. The pump is driven by a chain and sprockets from the left wheel of the Tropicultor and supplies the spray solution to nozzles at a maximum pressure of about 275 kPa (40 psi). The height of the boom can be varied from 75 cm to 235 cm from the ground to spray chemicals on low-growing vegetation or on tall crops like sorghum, pigeonpea and cotton.

Ultra-Low Volume Sprayer

A Tropicultor-mounted ultra-low volume (ULV) sprayer (**Fig. 5**) was developed using spinning disc assemblies. Each of the three assemblies was connected to a central tank via a 5-mm diameter PVC tube fitted with a cut-off valve. The position and orientation of the spinning disc could be adjusted according to row spacing of the crop. The boom and chemical container (10-*l* capacity) were mounted on a frame fixed on the Tropicultor platform such that the container was 20 cm above the boom. A 6-volt battery placed on the platform of the Tropicultor was used to energize the spinning-disc assemblies. The height of the

Fig. 5 Ultra-low volume sprayer mounted on the Tropicultor.

spray heads can be adjusted from 65 cm to 235 cm from the ground for spraying on low-growing vegetation as well as on tall crops.

The performances of both LV and ULV sprayers were tested by spraying insecticide (Endosulphan) on the pigeonpea crop at ICRISAT farms. The quantity of water required for the LV was 70-80 *l*/ha and for the ULV sprayers 8-10 *l*/ha. Both sprayers covered about 0.80 ha/h, whereas a conventional high-volume knapsack sprayer required 500 *l* of water and 8 h to cover 1 ha. All the sprayers were equally effective in controlling *Heliothis armigera* (pod borer). In a field trial at Farhatabad (district Gulbarga, India) the ULV sprayer, mounted on the WTC, was compared with the conventional high-volume sprayers for spraying the pigeonea crop. It was found that two sprayings in a season with the ULV sprayer, mounted on the WTC, resulted in better control of *Heliothis armigera* (5% pod damage), as compared to the control (10% damage) achieved by four sprayings in the season with the conventional knapsack method. The pod damage in unsprayed areas was up to 60%. The ULV sprayer mounted on the WTC required only 1 man-h and 1 bullock-pair h as compared to 24 man-h and 8 bullock-pair for spraying 1 ha (Hardiman, 1985).

Crust Breaker

Soil crusting or capping is a common problem in sandy and loamy soils of arid and semi-arid regions. It restricts the emergence of seedlings of crops like pearl millet, sorghum, soybean and other small grains. A rolling-type mechanical crust breaker with tandem rollers was developed for breaking the crust over rows of germinated seeds to improve the emergence of seedlings. The crust breaker could either be used as hand-pushed equipment by fitting a pair of handles or be attached to a wheeled tool carrier (Awadhwal and Thierstein, 1983). The tandem roller crust breaker required additional weight on the frame for its proper penetration into a hard crust. Hence, its frame for attachment on a tool carrier has been modified by shifting the vertical connecting link from one end of th frame to its middle. The modified tandem roller crust breaker does not require additional weight any more even for working on hard crust. It can be attached to any tool bar and works better on uneven surface also because its rollers can swing about the pivot on the vertical link and ride the undulations (Fig. 6).

Another crust breaker, called inclined axis roller crust breaker has been developed. It consists of a pair of wooden rollers with nails fixed on them at a spacing similar to the old crust breaker units. Each of the rollers is 50 cm long and 15 cm in diameter. The rollers are placed side by side with their axles inclined at an angle of 170°, and housed in a U frame made of mild-steel flats. It can be pulled by a pair of oxen, as an independent unit through a beam (Fig. 7) or can be attached to a WTC (Fig. 8) or underneath an indigenous bakhar (Fig. 9). It covers about 1-m wide strip and performs as good as the tandem roller crust breaker attached to a tool carrier. Its average field capacity is 0.4 ha/h.

Technical Support to Manufacturers

Technical support to a few manufacturers of improved equipment in India has been taken up to ensure availability of equipment from local sources. Assistance to manufactures is generally limited to design, drawings and training.

In addition to technical support to small manufactures in India, every effort has been made to promote testing and evaluation of improved machinery in other countries, specially where ICRISAT has mandatory responsibility. The WTCs are being evaluated in many African countries. Engineering

Fig. 6 Tandem roller crust breaker attached to a WTC.

Fig. 7 Inclined axis roller crust breaker–direct pulling type.

Fig. 8 Inclined axis roller crust breaker attached to a WTC.

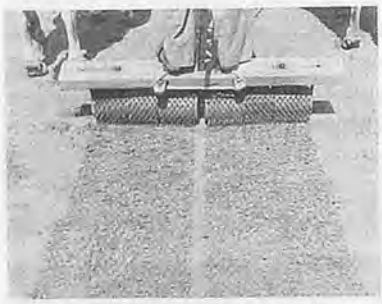

Fig. 9 Inclined axis rollers crust breaker attached to an indigenous bakhar.

drawings have been supplied to individuals and institutions in about 30 countries in Asia, Africa, Europe, Central and Latin America. Farmers in SAT regions in India have started appreciating the usefulness of WTC. This trend is encouraging and reflects the collaborative efforts by the Government extension agencies and national research institutions. Occasional subsidies from the Government also assist. As a result of all this the sale of the WTC in India is improving **(Fig. 10)** even though the direct purchase by individual farmers and non-government agencies is only about 11% (Fieldson, 1984).

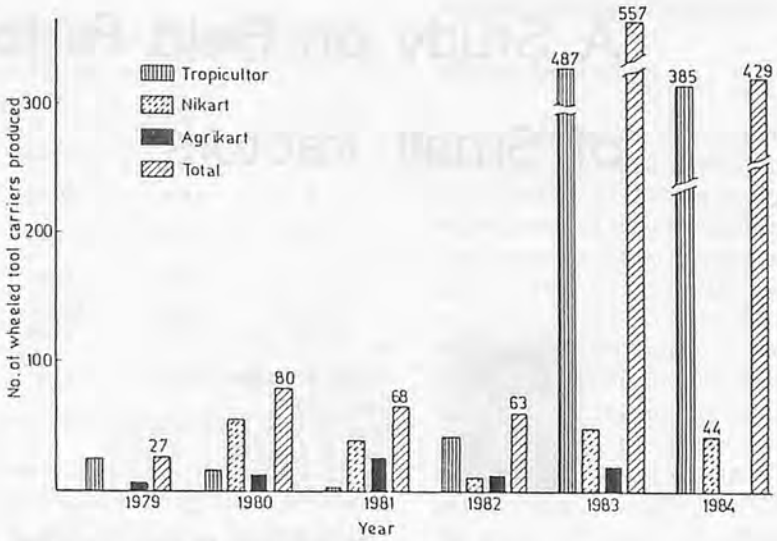

Fig. 10 Production of wheeled tool carriers in India.

Conclusion

The improved agricultural implements developed at ICRISAT are complementary to the improved farming system suitable for intensive cropping and improved soil and water management in the SAT. The three types of multipurpose animal-drawn WTCs with all the necessary implements have variations in versatility, comfort, and cost and provide a range of options to the farmers. In addition to the tool carriers, a four-row planter and fertilizer applicator, low and ultra-low volume sprayers, and crust breakers have been developed to meet specific requirements of SAT farmers. These machines are being evaluated in farmers' fields in cooperative experiments with national research institutions. The results have shown substantial increase in yields of major cereal and pulse crops and saving in cost by using these implements along with other improved inputs. ICRISAT has provided design drawings and technical advice to interested potential manufacturers in India, as well as in about 30 other countries.

REFERENCES

1. Awadhwal, N.K., and Thierstein, G.E. 1983. Development of rolling type crust breaker. Agricultural Mechanization in Asia, Africa and Latin America, 14 (4):31-34.
2. Bansal, R.K., and Rego, T.J. 1985. Animal drawn fertilizer applicators. In Fertilizer Application Equipment for Small Farmers. FAO Rome. Pages 3-24.
3. Bansal, R.K., and Srivastava, K.L. 1981. Improved animal-drawn implements for farming in the semi-arid tropics. Agricultural Mechanization in Asia, Africa and Latin American, 12 (2):33-38.
4. Bansal, R.K., and Thierstein, G.E. 1982. Animal drawn multipurpose tool carriers. Agricultural Mechanization in Asia, Africa, and Latin American, 13 (4):27-36.
5. Fieldson, R.S. 1984. Study of the adoption of animal drawn wheeled tool carriers in India. Overseas Division Report OD/84/5, Silsoe, Bedford, MK45 4HS, U.K. National Institute of Agricultural Engineering. 61 pages. (limited distribution).
6. Hardiman, R.T. 1985. The improved Vertisol technology. On-farm Research Report for 1984-85. International Crops Research Institute for the Semi-Arid Tropics. Patancheru, A.P. 502 324, India: (Unpublished report).
7. Stout, B.A., and Downing, C.M. 1975. Agricultural mechanization policy. Effects of Farm Mechanization on Production and Employment, February 1975. FAO, Rome, Italy.
8. Takenaga, T. 1973. The trend of pesticide applicator in study. Agricultural Mechanization in Asia, Africa and Latin America, 4(2):120-127.
9. Thierstein, G.E. 1979. Possibilities for mechanizing rainfed agriculture in the semi-arid tropics. Presented at IX International Agricultural Engineering Congress, 8-13 July 1979. E. Lansing, Mich. U.S.A.
10. Virmani, S.M., Willey, R.W., and Reddy, M.S. 1981. Problems, prospects, and technology for increasing cereal and pulse production from deep balk soils. Proceedings of the Seminar on Management of Deep Black Soils for Increased Production of Cereals, Pulses, and Oilseed. 21 May 1981, New Delhi, India. International Crops Research Institute for the Semi-Arid Tropics. Patancheru, A.P., India: Pages 21-36.

A Study on Field Performance of Small Tractors

by
Doğan Erdoğan
Assoc. Prof.
Dept. of Agric. Mechanization
Univ. of Ankara
Ankara, Turkey

Abstract

The study was carried out to determine the tractive performance of four small tractors with various ground drive systems under field conditions. The measurements were made of two- and four-wheel drive, two-wheeled and tracklayer tractors. The tractor power varied between 5.2 and 22.1 kW and weight of 255.1 and 1090.0 daN. The experiment used a loading tractor, an electrodynamometer, amplifier, classifier, etc. Investigations were made in the field conditions with firm and loose soil.

Introduction

The available tractor power per farm in Turkey is 0.81 hp/ha – higher than the world's 0.5 hp/ha. However, this is no indication that these tractors are used at optimum level. The country's farms are small: 97% are less than 20 ha each; 75% are less than 5 ha each.

The main aim of the present study is to examine the performance of small tractors and to compare them with other tractors engaged in experiments/tests.

Review of Literature

Backer and Struck (1) studied the traction properties of tires which are small in size. They used a tractor of 12.5 kW and weighed 435 kg. According to the findings of the experiment, the values of the normal, small tires were more effective than the large-sized tires.

Bock (2), studied the traction properties and the possibilities of their developments for the small tractors which have both rear and front drive system. It is recognized that there is some increase in the drawbar power of large-sized and dual and lattice type wheels which are used to increase the drawbar power of tractors on wet soil conditions.

Harzadin (6) studied efficiencies, costs and workability of small tractors which have different driving systems. From the point of development of drawbar power the crawler-type tractors were the best, and from the point of successful work, the tractors having 4-wheel were the best.

McCarthy and Kolozski (8) studied the loss of transmission systems of the tractors. Accordingly, losses increased as the level of gear increases. Additionally, the losses of different levels of gear changes linearly.

Uz (11) in his research, determined the performance of the low powered tractors used for landscape work. According to the test results, the crawler-type tractors with plow gave the best performance. Performance of 4 wheel-drive tractors gave the best results when used with soil cutter.

Materials

In this research, by taking into account that of the main driving systems of the less powered tractors were taken as material.

These tractors used in the study were the 4-wheel drive, 2-wheel drive, crawler-type and single axle wheel tractors.

The technical properties of these tractors were given in **Table 1**.

Another tractor was used for loading the trial tractors in the field. The engine of this tractor was replaced with a hydraulic pump which has a suitable performance. Pump apparatus was equipped with controlling elements such as flow variant valve and directional valve (**Fig. 1**).

A torquemeter, dynamometer, amplifier, variator, speed and time counters were used in the study, including a newly developed penetration-meter. The experiment was conducted on test fields of the Faculty of Agriculture of Ankara University.

Table 1 Technical Properties of Tractors

Property		Basak 12	Ferrari 75	Fidan	Ransome MG6
Total weight (with driver)	daN	849.4	1 095.0	255.1	810.3
Static weight of rear axle	daN	550.0	384.6	–	–
Engine yield power	kW	6.62	22.06	5.15	5.15
Rate of (weight/power)	daN/kW	128.3	49.1	49.6	157.4
Tension height	m	0.35	0.51	0.30	0.28
Driving system		Back wheel drive	4-wheel drive	Single axle	Crawler-type
Diameter of rolling circle of driving wheel (crawler-type wheel)	m	0.375	0.365	0.290	0.247

Fig. 1 Loading tractor.

Method

In determining the losses of transmission systems of the tractors, a variometer and a torquemeter were used. From the measured torque value the driving resistance was calculated using the following formula:

$$Rtr = 10.Mt/r$$

Where,

Rt: Driving resistance equivalent to driving wheels (daN);

Mt: Moment measured at driving wheel (Nm);

r: Diameter of rolling circle of driving wheel (m).

Field tests were conducted in 50-m long plots. Whenever required, a third tractor was used for the purpose of loading the test tractors. In the tests, the draw bar pull, slip, driving speed and driving resistance were measured. With the help of these measurements the following were calculated: theoretical speed, resistance and coefficient of rolling, traction coefficient, drawbar power, effective engine power, transmission effect degree, engine loading degree using the formula:

$$\mu = T/B = (Fç - R)/B$$

Where,

μ : Traction coefficient

T : Thrust (daN)

Fç : Drawbar pull (daN),

R : rolling resistance of non-driving wheels (daN)

B : Total vertical reaction which comes to driving wheels

and

$$\eta_W = \mu/(\mu - f) \cdot v/v_o$$

Where,

η_W : Driving wheel efficiency

f : Coefficient of rolling resistance

v : Actual speed (m/s)

v_o : Theoretical speed (m/s)

and

$$\eta_t = Pa/Pe \text{ and } e = Pe/Pmax$$

Where,

η_t : Tractive efficiency

e : Rate of engine load

Pmax : Maximum engine power (kW)

Pç : Drawbar power (kW)

Pe : Effective engine power (kW)

Test Results and Discussion

Efficiencies of Wheel

Working regimes maximum tractive efficiency which explains both the efficiency of the driving organs of tractors and the effectiveness of their drawbar power, were contradictory. For this reason, the optimal working regime of the tractors was at the points where the efficiencies were maximum. The working conditions of tractors for practical purposes can be explained by means of the limits of slip. These values were 15–25% for Basak, 10–15% for Ferrari, 15–20% for Fidan and 5–10% for Ransome. But since similar conditions are necessary in comparing these tractors, 10–20–30% of slippage values were chosen as a criteria.

Drawbar Force

The drawbar force of the tractors on the stubble fields with hard surface was higher than the one on the fields with soft surface.

The tractors developed biggest drawbar force when their gear level was low. The drawbar forces of the 3 tractors, except the one with single axle, against to slip are shown in **Fig. 2**. Only the values at the theoretical speed of 1 m/sec were taken to eliminate the speed factor in comparison.

Under these working conditions, the crawler-type tractor developed the highest drawbar force although it was less in weight at low slip values. At higher slip values, the tractor of 4-wheel drive showed the highest drawbar force.

Traction Coefficient

The changes in traction coefficients at different–but selected for comparison–gear levels are shown at **Fig. 3**. The values of crawler type tractor under the conditions of both landscapes were highest, espe-

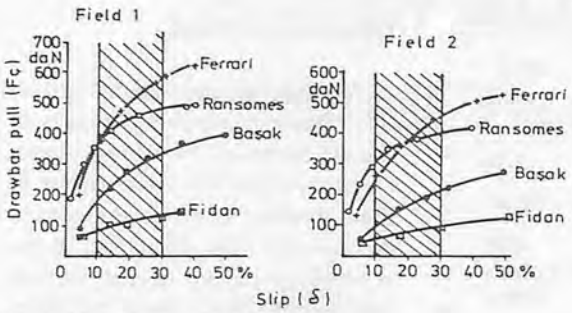

Fig. 2 Drawbar pull and slip.

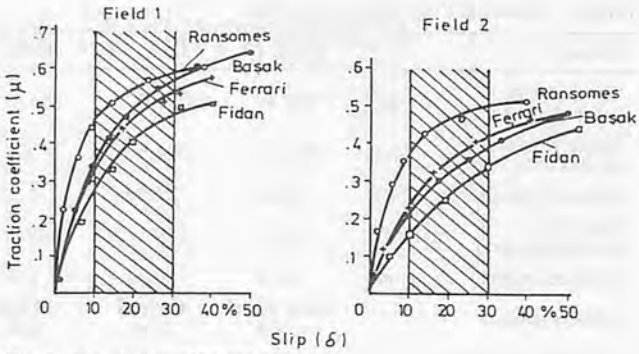

Fig. 3 Traction coefficient and slip.

cially, for the smallest slip values. All the tractors with rubber tires gave also the similar traction values.

The traction coefficient, for practical purposes, at 1 m/s of theoretical speed, and for the rubber tired tractors, was determined as 0.40-0.45 and 0.30-0.35 on hard-dry field and dry-soft field, respectively. For the crawler-type tractors, those values were between 0.50–0.55 and 0.40–0.45 on hard-dry and dry-soft fields.

Power Characteristics

Since the drawbar power of tractors under the test conditions are similar with the utilization power, they are thus so important. But, the rate of drawbar power to the effective motor power is also important: as that rate increased, the utility from energy used also increased.

As maximum drawbar power developed, the distribution of power of tractors is similar to that one at maximum efficiency. The optimal conditions of the tractors considered best, were the results obtained from the crawler-type tractor and the 4-wheel drive tractor. On drawbar characteristics the rear 2-wheel drive classic tractor has been able to change the energy.

REFERENCES

Backer, G. ve W. Struck, 1978. Triebkraftverhalten von Niederdruckreifen. Landtechnik, pp.34-38.

Bock, G., 1954. Zugkraftmessungen an leicten Ackerschleppern auf kültivieren Moorböden. Land Forschung, pp. 87-91.

Blumental R., 1971. Traktoren. Technische Handbuch, 572 s. VEB Verlag Tachnick. Berlin.

Erdoğan, D. 1982. Değisik Hareket Sistemly Küçük Güçlü Traktörlerin Tarlakoşullarindaki Performanslari Üzerinde Bir Araştirma. Doçentlik Tezi. A.Ü. Ziraat Fakültesi. Ankara.

Franke, R., 1965. Beiwerte über Rollwiderstand, Kraftschluss und Zugkraft von Wagen und Ackershleppern. Land. Forschung, pp. 137-143.

Harzadin, G., 1962. Muhtelif Tip Küçük Takatli Traktörler Üzerinde bir Araştirma. Doktora Tezi, Toprak-Su G.Md. Lüğü Yayinlari, 187 s. Ankara

Kawamura, N., 1978. The Japanese Small Tractor. The Agricultural Engineer pp. 47-50.

McCarthy, T.T. ve Z. Kolozski, 1974. The Measurement of Tractor Transmission Losses. JAER, pp. 71-75.

Osborne, L.F., 1971. A Field Comparison of the Performance of Two-and Four-wheel Drive and Tracklaying Tractors. JAER, pp. 46-61.

Steinkampf, H., 1975. Ermittlung von Reifenkennlinien und Geratezugleistungen für Ackerschlepper. Landbau Forschung, Sonderheft 27. Volkenrode.

Uz, E., 1975. Tele Alinmiş Bağlarda Çeşitli Tip Traktörlerin, Pulluk ve Frezeleri ile Yapilan Toprak İşlemesinde İş Verimi ve Zaman İhtiyacinin Tesbiti Üzerinde Bir Araştirma. Ege Üniversitesi Yayinlari, no. 273. ■■

Factors Affecting Repair and Maintenance Costs of Farm Tractors

by
Sheruddin Bukhari
Assoc. Prof.
Dept. of Farm Power and Machinery
Sind Agriculture University
Tandojam, Pakistan

J.M. Baloch
Asst. Prof.
Dept. of Farm Power and Machinery
Sind Agric. Univ.
Tandojam, Pakistan

Ali Nawaz Merani
Lecturer
Dept. of Farm Power and Machinery
Sind Agric. Univ.
Tandojam, Pakistan

Introduction

Tractor is the most important item of power farming machines for mechanizing the farm which requires a high initial investment. The service life of a farm tractor greatly depends on timely repair and maintenance which is the most important aspect of the management. The value of a farm tractor depends upon the unfailing and efficient operation. Thousands of hours of serviceable life have been built into the engine of the tractor by manufacturers. These many hours of operation can be realized only by observing a systematic maintenance programme and by supplying it with clean high quality fuel, clean air and high quality lubricants in the proper amounts.

Repair and maintenance costs are approximately proportional to the amount of use per year and cease when it stops operating. With good maintenance the cost of repairs and wear can be reduced. But the thing which is of great importance for a farmer is to carry out each farm operation in time and it is only possible if the farm tractor is tuned up and maintained properly. If due attention is not given towards the proper and timely repair and maintenance of the tractor, the tractor will naturally not give the desired service. Thus it will make the different farm operations difficult for the farmer to be carried out in time, resulting in low farm production. This will automatically increase the per unit cost of production, resulting in the low income of the farmer.

Many tractors operate longer than the wear out life but with increased repair and maintenance costs per hour. Good tractor maintenance begins upon purchase of the tractor. The dealer will go over pointing out the special features and also explain what an owner must do to properly care for the tractor. The maintenance should be simplified by the manufacturer to the extent that it is possible to keep the tractor in better mechanical condition. A small but adequate stock of wearing replacement parts can be kept with minimum trouble and outlay, with regular oil changing, intelligent use and maintenance. The main objective of this study was to evaluate the effect of age of tractor, annual use, make and model and farm size on the repair and maintenance cost per hour of the farm tractor.

From this study, the tractor owners would have a guideline regarding optimum use of tractors for minimizing repair and maintenance cost per hour. The effect of age on repair and maintenance cost would be helpful in making decisions for replacing an old tractor with a new one at a certain age of the tractor. The study would be helpful to government and other agencies for future planning for providing tractor services to the farmers through custom hire system, and importing tractors with lower repair and maintenance cost.

Materials and Methods

The survey of all tractors owned by the farmers was conducted in Quetta district during 1982. The

district covers an area of 2 653 km^2, out of which 294 km^2 is cultivated under karez irrigation system, tubewells and rainfed. The data regarding the number of tractors maintained on the farms, cultivated area and addresses of the tractor owners were collected from the office of the Extra Assistant Director of Agriculture, Quetta and Agriculture Officers in all the sub-divisions. The survey of all the existing tractors was carried out. The district has in all 53 tractors. This represented 100% of the tractor population.

The repair and maintenance cost includes cost for all sorts of repairs, cost of oils and lubricants, tyres, tubes and other parts replacement etc.

For the calculation of repair and maintenance cost per hour of various types of tractors, annual use in hours, age in years, farm size in ha and skill of operater are the variables taken for study.

The repair and maintenance cost per hp-h has been calculated by dividing the per hour repair and maintenance cost by the average horsepower of the tractors. The per 100 hours repair and maintenance cost as percent of the purchase price is calculated by dividing the per hour repair and maintenance cost by the average purchase price and multiplying by 10 000 (100 x 100).

Results and Discussion

The farm land requires tractors for raising crops and to bring barren land under cultivation. There has been a rapid increase in the number of tractors. Farmers are interested in intensifying crop areas by extended use of tractors. The main objective of this study was to evaluate the extent of repair and maintenance of wheel type farm tractors, the results are discussed under repair and maintenance costs as i) affected by annual use; ii) age of tractors; iii) size of farm; and various makes and models.

Repair and Maintenance Cost as Affected by Use.

Table 1 shows the repair and maintenance costs for various ranges of annual use. The data shows that the cost of repair and maintenance is closely related to the amount of annual use. The repair and maintenance cost is significantly affected by annual use. The repair and maintenance cost per hour was lower for the tractors used for longer time each year. However, the high rate of annual use had also resulted in more breakdowns and increase in the annual repair and maintenance costs. The repair costs decreased when the annual use was increased beyond 1 000 h. The repair costs were highest for annual use class of up to 500 h and lowest for 1 501 to 1 750 category. The costs per hour have not been decreased by increased annual use of more than 1 750 h due to the reason that the few tractors requiring more repairs had fallen in this group of tractors having high annual use. The related reduction in repair and maintenance cost per hour with increased annual use shows an agreement with the views of Lonnemark (1967).

The repair and maintenance cost per hp-h and percent of purchase price was also highest for annual use class of up to 500 and lowest for annual use range of 1 501 to 1 750 h.

Table 1 Average Annual Use and Repair and Maintenance Cost of Farm Tractors

Annual use categories h	Number studied	Tractor horse-power	Annual use h	Purchase price Rs.	Repair and maintenance cost/h Rs.	Repair and maintenance cost/hp-h Rs.	Repair and maintenance cost (% of purchase price) [Av/100 h]
Up to 500	1	35.00	400.00	14 000	26.36	0.75	18.82
501 – 1 000	6	44.33	900.00	51 167	12.27	0.27	2.39
1 001 – 1 250	16	45.80	1 187.50	60 500	9.62	0.21	1.59
1 251 – 1 500	15	48.47	1 500.00	69 500	8.56	0.17	1.25
1 501 – 1 750	1	55.00	1 600.00	92 000	5.95	0.11	0.65
Above 1 750	14	49.86	1 857.14	80 640	7.11	0.14	0.88

Table 2 Average Age of Tractors and Repair and Miantenance Cost

Tractor age (after purchase) Years	Number studied	Horse-power	Annual use h	Purchase price Rs.	Repair and maintenance cost/h Rs.	Repair and maintenance cost/hp-h Rs.	Repair and maintenance cost (% of purchase price) [Av./100 h]
2 – 4	18	50.55	1 672	82 611	7.67	0.14	0.94
4.1 – 6	9	47.77	1 600	71 611	7.80	0.16	1.09
6.1 – 8	12	46.90	1 291	64 333	9.30	0.19	1.45
8.1 – 10	9	48.44	1 144	56 333	10.59	0.21	1.88
Above 10	5	35.00	920	28 400	14.39	0.41	5.06

Repair and Maintenance Cost as Affected by Age

The repair and maintenance cost per hour affected by age of tractors is shown in **Table 2**. The older tractors had higher repair and maintenance cost per hour as older tractors had frequent breakdowns which were blamed on poor workmanship. The hydraulic problems of tractors plagued the owners. The repair and maintenance cost of tractors was high during the age of 6 to 8 years. The high hourly cost has occurred due to engine overhauls, replacement of tyres and batteries, fuel injection pump repairs, hydraulic system service etc. The repair and maintenance cost further increased as age increased beyond 10 years. This shows that the repair cost is directly related to the age of tractors.

The repair and maintenance cost per hp-h was higher for older tractors due also to the fact that older tractors had frequent breakdowns. The repair and maintenance cost as percent of purchase price was equally higher for older tractors.

The repair and maintenance cost was highest for the Massey Ferguson 35X tractors. The Belarus tractor was next in high cost of repair and maintenance. Ford, Fiat and Massey Ferguson tractor makes had the lowest repair and maintenance cost. The genuine spare parts were also available for these tractor makes. Massey Ferguson tractor being medium in size, was most successful in the area. The data in **Table 2** also reveals that the repair and maintenance cost per hour, repair and maintenance cost per hp-h and repair and maintenance cost percent of purchase price was highest for older tractor models.

During the last decade, the sudden rise in the prices of spare parts, lubricants and materials took place due to high inflation rate and exorbitant rise in petroleum product cost. The prices of spare parts and lubricants were more than six time in 1981-82 than 1974-75. Non-availability of genuine spare parts had been a major cause of frequent breakdowns, repairs and replacements within short periods. The adulteration of oil and fuel also resuslted in major losses. It was found that majority of the tractors beyond age of 3 to 4 years required engine overhauls. The repair charges by service shops had also substantially increased and varied from one shop to another. These factors had added to a high percentage of repair and maintenance cost per hour. Only one tractor in the category of above 10 years age was beyond the economic life of more than 12 years and the owner had spent much for keeping it in working order. Since the purchase price of the tractors purchased before 1975 was low, the repair and maintenance cost as percentage of purchase price of these tractors has increased. Untrained tractor operators and mechanics were also major causes of high repair and maintenance costs. The findings of Esmay and Faidley (1973) that the life expectancy of tractors in the developing countries was 25% less and repair costs were 100% more than in the United States. Lonnemark (1967) quoted repair and maintenance costs from the yearbook of the American Society of Agricultural Engineers (1965) as percentage of purchase price that in developing countries the cost of repairs is 150% as compared to 12% in United States due mainly to higher prices of spares, some times to a lack of knowledge of proper operation and maintenance. Bowers and Hunt (1970) estimated the accumulated repairs as 1.6 times the purchase price with inflation.

It was observed from the present study that tractor replacement policy was based upon the availability of finance for the purchase of new tractor rather than economic life period considerations.

Repair and Maintenance Cost as Affected by Size of Farm

The repair and maintenance cost according to size of farm is shown in **Table 3**. The area per tractor has been considered as the farm size. In the sample, only two smallest tractor farms with an area of about 4 ha were included. Otherwise an average area of smallest farms having tractors was about 10 ha and the biggest farm was about 385 ha with an average of 338 ha. The tractors were used for operations

Table 3 Average Farm Size and Repair and Maintenance Cost

Farm size h	Number studied	Farm size ha	Annual use h	Purchase price Rs.	Repair and maintenance cost per h Rs.	Repair and maintenance cost per/hp-h Rs.	Repair and maintenance cost (% of purchase price) [Av./100 h]
Up to 25	11	10.75	1 400	65 455	9.15	0.21	1.39
26 – 50	9	34.09	1 533	76 833	7.77	0.16	1.01
51 – 75	3	61.52	1 033	48 667	15.29	0.39	3.14
76 – 100	8	80.94	1 525	67 625	8.94	0.18	1.32
101 – 150	14	111.64	1 329	67 286	9.93	0.20	1.48
151 – 200	2	161.88	1 250	66 500	9.68	0.21	1.45
201 – 250	2	222.59	1 550	74 500	7.22	0.15	0.97
Above 250	4	338.94	1 700	64 000	6.48	0.15	1.01

Table 4 Tractor Model and Repair and Maintenance Cost

Tractor model	Horse-power	Number studied	Annual use	Purchase price	Repair and maintenance cost per h	Repair and maintenance cose per hp-h	Repair and maintenance cost (% of purchase price) [Av./100 h]
			h	Rs.	Rs.	Rs.	
Ford 4000	55	2	1 550	88 500	6.27	0.11	0.71
Fiat 480	48	2	1 900	68 000	6.35	0.13	0.93
Ford 3600	46	3	1 767	89 333	6.60	0.14	0.74
Massey 240 Ferguson	47	8	1 425	80 000	7.71	0.16	0.96
Massey 135 Ferguson	47	20	1 450	64 175	8.27	0.18	1.29
Ford 3000	46	4	1250	68 500	8.85	0.19	1.29
MTZ-50	55	9	1 578	70 222	9.41	0.17	1.34
Massey 35X Ferguson	35	5	920	28 400	12.60	0.36	4.44

like plowing, harrowing, levelling, cultivating and transport.

As far as the effect of farm size on repair and maintenance cost of farm tractors is concerned, the data in **Table 3** does not show any significant effect of this variable though **Table 3** shows a higher repair cost for tractors engaged on farms of 51 to 75 ha size, but that is not due to the farm size. As a matter of fact that is mainly due to the engagement of old MF-35X type tractors on these farms which being very old, had frequent breakdowns and repairs and as a result, low annual progress in the shape of hours.

It was observed that the tractor owners have realized the benefits of the increased annual use of the tractors. Therefore, the small farmers having less than 100 ha used to hire out their tractors, after completing their own jobs to the other needy farmers and people. Thus these tractor owners, inspite of having small farms, have mostly kept their tractors engaged throughout the year.

Repair and Maintenance Cost of Various Makes and Models

Repair and maintenance cost per hour, repair and maintenance cost per hp-h and percent of purchase price of various makes and models of tractors is given in **Table 4**. Five Massey Ferguson 35X and 10 other tractors were beyond 8 years age which needed more repairs. These tractors had resulted in high rate of repair and maintenance cost per h. This is in agreement with the findings of Lonnemark (1967). Repair and maintenance cost for Ford, Fiat and Massey Ferguson tractors was less as compared to other makes and models of the tractors due to less repairs during early life and high rate of annual use. The highest repair and maintenance cost was found for Belarus due to frequent repairs. As reported by the farmers all the makes of tractors were successful in the area. The number, of Massey Ferguson tractors was high as the spare parts were easily available. The repair and maintenance cost per hp-h and percent of purchase price was lower for Ford, Fiat and Massey Ferguson-240 tractors and higher for Massey Ferguson 35X and Belarus tractors.

Conclusions

1. The repair and maintenance cost varied with the annual use and the season's use was much more important than the age of tractor.
2. The cost of repair and maintenance necessary to keep the tractor in serviceable condition increased as it became older.
3. The farm size has little effect on repair and maintenance cost of tractors.
4. Ford tractors make had the lowest repair and maintenance cost as compared with other makes of tractor.
5. The Belarus tractor had the highest repair and maintenance cost.

REFERENCES

ASAE, (1970). Agricultural Machinery Costs and Use. in: Agricultural Engineers Year Book. St. Joseph, Michigan, 49085. U.S.A.

ASAE, (1980). Costs of Use. in: Agricultural Engineers Year Book. St. Joseph Michigan 49085. U.S.A. 796 Pages.

Barger, E.L., J.B. Lilhedahl, W.M. Carleton and E.G. Mckibben (1967). Tractor Power Cost Estimating. in: Tractors and their Power Units. Second Ed. The Ferguson Foundation Agricultural Engineering Series. John Wiley and Sons, Inc. New York. 400 Pages.

Bowers, W. and D. Hunt, (1970). Application for mathematical formulae to repair cost data. Trans. ASAE, 13(6): 806-809.

Bukhari, S.B. (1982). Evaluation of Farmers Competence to Maintain Tractors. AMA Japan, 13(4): 62-67, 70.

Fairbanks, G.E., G. Larson, and D. Chung, (1971). Cost of Using Farm Machinery, Trans. ASAE, 14(1): 90-101.

Feasibility Study on Animal-Drawn Tool Carrier for Selected Crop Rotations

by
Surendra Singh
Assistant Engineer
Dept. of Farm Power and Machinery
Punjab Agricultural University
Ludhiana, India

Santokh Singh
Assoc. Prof.
Dept. of Farm Power and Machinery
Punjab Agric. Univ.
Ludhiana, India

V.K. Sharma
Asst. Prof.
Dept. of Farm Power and Machinery
Punjab Agric. Univ.
Ludhiana, India

P.K. Gupta
Asst. Prof.
Dept. of Farm Power and Machinery
Punjab Agric. Univ.
Ludhiana, India

Abstract

A multi-purpose tool carrier was designed by the NIAE/CRISAT to perform agricultural operations, including transport where animals are the main source of power. Field trials indicate that the major advantage of the tool carrier in the Punjab region is in terms of increased capacity in seeding and weeding operations for row crops. The cost of attachments with the tool carrier as compared with the improved set of equipment currently gaining popularity in the region, is about double the conventional equipment.

Introduction

In Punjab, about 75% of the holdings are small (under 3 ha). Wheat, paddy, cotton, maize and groundnut are the major crops of Punjab. At present there are about 0.85 million pairs of bullocks employed for the cultivation of crops. A farmer in Punjab with a pair of draft animals usually has soil stirring plough, seed drill and interculture tools. These equipment have a low work rate. With this power source and conventional equipment the farmer often has difficulty in completing critical farm operations like seedbed preparation. Besides, the power of the draught animals is not fully utilized. Therefore, it is desirable to introduce a system of implements to overcome these problems.

The concept of an animal-drawn wheeled tool carrier was introduced about 30 years ago. The major objective of introducing the multipurpose tool carrier was to provide an equipment to the small and marginal farmers which can perform virtually all operations that a tractor can do. In addition, reduction in human drudgery was envisaged.

The first tool carrier appeared in West Africa in the early 1950s. Since then many design and development changes took place in the tool carrier in order to suit the local conditions (3). However, all have a common tool bar where different implements are attached for various farm operations. They have a provision for cart attachment also. Four tool carriers developed in different regions were tested and the performance was reported satisfactory (3, 4). The tool carrier developed at ICRISAT was modified in order to reduce its cost by replacing pneumatic tyres with small steel wheels called 'tool frame' (2).

Attachment to the tool carrier would naturally vary with the crops grown and the cultural practices followed. A tool carrier found suitable in one region, therefore, may not be suitable in other regions. Evaluation studies on the tool carrier were, therefore, undertaken for the major crops grown in Punjab.

Materials and Methods

Acknowledgements: Financial support, by I.C.A.R. for conducting this research work in the scheme 'Research and Development of Farm Implements and Machinery and Production of Prototype etc. is gratefully acknowledged.

Description of Tool Carrier

The tool carrier consists of a frame, tool bar, wheels, a beam and a seat (**Fig. 1**). Different attachments can be fitted on the bar for various farming operations. The frame is made of G.I. pipe of 60 mm diameter mounted on two pneumatic wheels (5.90 x 15) through a height adjustment mechanism. Frame height can be adjusted with respect to the wheels by depth screws provided for each wheel and operated by hand levers. Wheels have a fixed wheel track of 1 500 mm and are fitted on ball bearings. The 1 650 mm long tool bar made of 40 mm square section is rigidly fixed on the frame. Hitching brackets were provided for fixing 75 mm diameter G.I. pipe beam. A seat for the operator, foot rest, and lift lever for tool bar were also provided. An over centre lift mechanism is provided to facilitate the operations of lift lever by a seated driver.

Development of Suitable Attachments

Possible attachments to the tool carrier for major crops of Punjab are indicated in **Table 1**. It is evident from this table that no attachment is possible for paddy which is a major crop of Punjab. Weeding is possible only in crops like maize, cotton and groundnut which have wide row spacings. Harvesting operation is also limited to potato and groundnut crops only. Therefore, the use of tool carrier is limited only to tillage and sowing in wheat which is a major crop of Punjab. Three attachments, namely; mould board plough, ridger and sweep were provided with the tool carrier. A 6-row seed-cum-fertilizer drill and 5-tines for tillage (conventionally used in cultivators) were fabricated as attachments to the tool carrier.

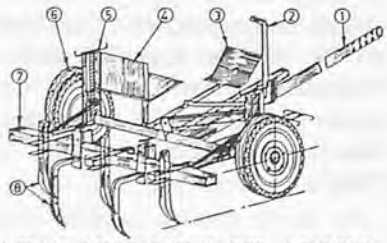

Fig. 1 Multi-purpose tool carrier.

Table 1 Possible Use of Tool Carrier for Major Crops of Punjab

Crop	Seed bed preparation	Sowing	Weeding	Harvesting
Paddy	NP[1]	NP[1]	NP[2]	NP[3]
Wheat	Five tine cultivator	Six row drill	NP[2]	-do-
Maize	-do-	Three row planter	5-row sweep	-do-
Cotton	-do-	-do-	-do-	-do-
Groundnut	-do-	-do-	-do-	Digging blades
Potato	-do-	Ridging by one bottom	Earthing up with ridger	-do-

Note: 1. The draught requirement of tool carrier for puddling was excessive because of wheels. 2. No weeding is possible because of narrow row spacing. 3. No suitable attachment is available/popular. 4. NP = Not possible.

Results and Discussion

The capacity of tillage operation can be substantially increased with the use of tool carrier as compared to conventional equipment like soil stirring plough (**Table 2**). Increased capacity of the cultivator attachment (0.28 ha/h) as compared to disc harrow (0.20 ha/h) is for single operation only. The disc harrow has better pulverizing action as compared to tine cultivator. It would require two operations for the preparation of seedbed in light soils of Punjab as compared to three operations with a tine cultivator. Thus, there is no appreciable advantage in the use of five tine cultivator as compared to improved equipment like disc harrow which is fast catching up in the Punjab especially after the introduction of paddy.

The capacity of the seed-drill attachment to the tool carrier increased (0.30 ha/h) as compared to conventional seed drill (0.075 ha/h) and improved seed drill (0.15 ha/h). Similar advantage would be observed in case of planting attachment for planting wide row crops like maize, cotton and groundnut.

The tool carrier with sweep attachment was used with great advantage for weeding in wide row crops like maize, cotton and groundnut (0.37 ha/h). The advantage of increased capacity has also been observed with ridger attachment (0.20 ha/h) as compared to conventionally used ridgers for potato planting (0.06 ha/h).

The major cost involved for the pneumatic tyres which is possibly justified only if cart attachment is used with the tool carrier. Carts with pneumatic tyres are very popular with the Punjab farmers and are available for about Rs.4000. Even if it is assumed that the cart attachment of the tool carrier and improved carts have similar capacity, the cost of the attachments with the tool carrier as compared to improved set of equipment like disc harrow-cum-puddler, seed drill with planting attachment and potato and groundnut digging blades is about double (**Table 2**). The cost as compared to conventional equipment used by the farmers is much higher. This factor is a most serious limitation in the introduction of tool carrier in this region even though it reduces the drudgery of operation by providing a seat.

Table 2 Cost and Capacity of Different Bullock-Drawn Equipment

Tool carrier			Conventional equipment			Improved equipment		
Name	Cost Rs.	Capacity ha/h	Name	Cost Rs.	Capacity ha/h	Name	Cost Rs.	Capacity ha/h
Tool carrier	9 300	–	Soil stirring plow	150	0.075	Disc harrow-cum-puddler	1 000	0.200
Sweep attachment (5)	200	0.375	'Pora' attachment (1)	20	0.075	Seed drill-cum-planter (3-row)	2 000	0.150
Cultivator attachment (5)	300	0.280	'Khurpa' (2)	10	0.007	Cultivator (5-tine)	300	0.170
Ridger attachment (2)	200	0.200	'Kasola' (3)	20	0.010	Potato digging blade	100	0.100
Seed drill attachment (6-row)	1 500	0.300	Spade	30	0.015	Groundnut digging blade	150	0.150
Planter attachment (3-row)	1 000	0.400	Ridger	100	0.060	Cart with pneumatic wheels	4 000	–
Transportation attachment (cart)	1 500	–	Wooden cart (wooden wheels)	3 000				
Total	14 000			3 330			7 550	

Note: (1) A long tube with a funnel at the top attached behind soil stirring plow. (2) A hand tool with small handle used in sitting posture. (3) A hand tool with relatively larger handle used in bending posture.

Conclusion

1. The capacity of the tillage, sowing and weeding equipment can be increased with the use of a tool carrier as compared to conventionally used equipment.

2. Possible attachments to the tool carrier for most important crops of the Punjab region like wheat and paddy are very limited.

3. The cost of attachments with the tool carrier is much higher as compared to conventional and improved equipment which would prohibit its introduction in Punjab.

REFERENCES

Annual Report, All India Coordinated Scheme for Research and Development of Farm Implements and Machinery (IGAR), Department of Farm Power & Machinery, Punjab Agricultural University, Ludhiana, Page 46-58 (1985).

Annual Report, All India Coordinated Scheme for Research and Development of Farm Implements and Machinery (IGAR), Central Institute of Agricultural Engineering, Bhopal (M.P.) Page 1-34 (1985).

Annual Report, International Crops Research Institute for the Semi-Arid Tropics (ICRISAT), Patancheru P.O. Andhra Pradesh, Page 248-254 (1981).

Bansal, R.K. and Thierstein G.E. Animal Drawn Multipurpose Tool Carrier Agril. Mech. in Asia, Africa and Latin America. Autumn. Page 27-36 (1962). ■■

Implications of Tractorization on Employment, Productivity and Income in an Irrigated Area of Ahmednagar District, India

by
A.S. Patil
Agric. Economist
National Bank for Agriculture and Rural Development
Regional Office
Bhopal-462003, M.P., India

A.S. Sirohi
Head
Dept. of Agric. Economics
Indian Agric. Res. Institute
New Delhi-110012, India

Abstract

A view-point is being expressed that official patronage to encourage the use of tractor and other farm machinery would not be in consonance with the employment oriented strategy of agricultural development, particularly in case of India. However, this study indicates that the use of tractors and other related mechanical equipment augments human labour employment and is essential for the modernization of Indian agriculture and for realizing its maximum production potentials. Thus, the approach to developing a policy on mechanization for the country should be based on region by region and period analyses of contingencies of farming rather than on a search for a uniform policy for all areas and all time periods.

Introduction

Among the important changes which the Indian agriculture witnessed in the 1970s was the rapid increase in the use of farm machines such as tractors, threshers, diesel and electrical pumpsets. The green revolution characterized by the use of high-yielding variety seeds, irrigation, chemical fertilizers, insecticides and pesticides, which gathered momentum in the late 1960s and early 1970s, induced farmers to increase the intensity of cropping and evolve efficient cropping patterns. The role of this new seed-fertilizer technology in increasing employment and output is well known. In several regions of India, the adoption of modern agricultural technology was accompanied by farm mechanization, particularly the use of tractors and threshers for timely and efficient completion of farm operations. However, the impact of farm mechanization on productivity and labour employment remained a subject of debate. Controversies seem to have developed around farm mechanization, in general, and some of its components like tractorization, in particular.

Quantitative estimates of the effect of tractorization on output and employment varied from region to region. For example, Singh and Singh (1970) in Western Uttar Pradesh and Motilal (1973) in Union Territory of Delhi found that yield was higher but employment of human labour was lower on tractor farms than on bullock farms. Sharma (1972) in Haryana observed that gross value of crop output per cultivated acre was about 18% higher but per acre utilization of labour was 7% less on tractor farms than on bullock farms. The National Council of Applied Economic Research (1981) in their survey covering 815 farmers in 7 states during 1977-78 found that the net income of tractor owners was, on an average, two hand half times higher than that of farmers using bullocks and that farmers who merely hire tractors for use also did well in comparison with the latter. The increase in employment of 5.4% was also observed on tractor farms. However, the labour displacement effect of tractorization on Punjab farms was observed by Raj Krishna (1974). Thus, the region-specific study on impact of tractorization on output and employment assumes a special significance. Therefore, the present study attempted to measure the impact of tractorization on human labour employment and returns on the farms of the irrigated tract of Ahmednagar district in Maharashtra State.

Acknowledgement: The authors acknowledge the helpful suggestions of Dr. R. Satyanarayana.

Methodology

The data utilized in the study pertain to the agricultural year 1979-80. A multi-state stratified random sampling was used to select "tehsils", hamlet villages and sample farmers. All the tehsils of the district were ranked on the basis of number of tractors and power threshers. Three tehsils, viz., Shrirampur, Kopargaon and Rahuri, with the highest ranks were selected. In the selected tehsils, villages in turn were classified into three groups on the basis of tractor and thresher population. From each group three villages were selected randomly. All the farms of these selected villages were listed and classified as bullock operated farms and tractor operated farms. The bullock operated farms of less than 4 ha size and the tractor operated farms of greater than 15 ha size were excluded in order to obtain comparable farm sizes in two categories. A sample of 90 tractor-operated holdings were selected randomly. The number of tractor-operated holdings selected from each village was kept proportional to the size of tractor population in that village. From the same set of selected villages an equal sample-size of bullock-operated holdings was selected randomly, following a similar procedure.

The sampled farmers were personally interviewed and the input-output data were collected with the help of specially designed schedule.

All the selected holdings from two categories were divided into three farm size groups, viz., below 6 ha, 6 to 10 ha and above 10 ha. During the survey it was also found that a good number of bullock-operated farms were using tractors on custom-hiring basis, similarly, tractor-operated farms were maintaining at least one pair of bullocks to carry out certain operations. Keeping this in a view, the sample holdings were further classified into:

1. Bullock-operated farms (BOF),
2. Bullock-operated plus tractor hiring farms (BOF+THF),
3. Tractor-operated farms (TOF) and
4. Tractor-plus bullock-operated farms (TOF+BOF).

The distribution of holdings according to motive power and farm size is given in **Table 1**.

Table 1 Distribution of Sample Holdings According to Farm Size and Motive Power

Holding size	Farm size group	Number of sample holdings			
		BOF	BOF+THF	TOF	TOF+BHF
Below 6 ha	Small	20	18	8	7
6 to 10 ha	Medium	15	20	16	18
Above 10 ha	Large	9	8	16	25
Total		44	46	40	50

Results and Discussion

Farm Size and Cropping Intensity

Information in respect of the average operational area, cropped area, irrigated area and cropping intensities on different size groups and categories of farms is given in **Table 2**. It is evident from the table that the average farm sizes of bullock-operated plus tractor hiring farms (BOF+THF) were smaller than bullock-operated farms (BOF), but the differences were marginal. However, the average farm sizes of BOF and BOF+THF differred significantly from that of tractor operated farms (TOF) and tractor plus bullock operated farms (TOF+BOF) and this difference was observed to be more significant among medium-and large-sized farms. The over-all mean size of TOF and TOF+BOF was higher by 37 and 54% when compared to that of BOF, respectively, and this was also higher by 40 and 57%, respectively, in comparison with BOF+THF.

The differences in cropping intensities in different farm size groups of four categories were analyzed. In Maharashtra, the duration of sugarcane crop varies from one to one and one-half years depending on planting season. Thus,

Table 2 Average Farm Size and Intensity of Cropping on Different Categories of Farms

Farm category	Net cultivated area per farm (ha)	Cropped area per farm (ha)		Cropping intensity (%)		Irrigated area (%)
		I	II	I	II	
		Small farms				
BOF	4.62	6.00	7.08	129.87	153.11	92.86
BOF+THF	4.57	5.99	7.44	131.07	162.74	95.44
TOF	5.05	7.59	9.59	150.40	190.04	92.93
TOF+BOF	5.49	8.14	10.40	148.44	189.56	92.19
		Medium farms				
BOF	7.51	9.97	11.29	127.46	150.44	89.40
BOF+THF	7.24	9.27	10.95	128.09	151.25	88.42
TOF	8.52	11.24	14.12	131.90	165.71	90.90
TOF+BOF	8.79	11.41	14.25	129.89	162.21	89.53
		Large farms				
BOF	11.89	14.16	16.77	119.07	141.12	82.35
BOF+THF	11.65	13.48	16.45	115.67	141.20	81.82
TOF	13.30	16.16	20.08	121.54	150.97	89.98
TOF+BOF	13.94	16.89	20.99	121.11	150.55	92.17
		Overall				
BOF	7.09	8.90	10.50	125.53	148.03	88.27
BOF+THF	6.97	8.68	10.45	124.63	150.04	87.38
TOF	9.74	12.48	15.66	128.15	160.35	90.83
TOF+BOF	10.91	13.69	17.13	125.55	157.11	92.04

Table 3 Cropping Pattern on Different Categories of Farms

Farm category	Percentage of Gross Cropped Area Planted to:						
	Cereals	Sugarcane	Cotton	Ground-nut	Pulses	Vege-table	Grass and other crops
			Small farms				
BOF	60.10	17.11	8.26	3.26	3.00	3.09	5.18
BOF+THF	48.29	24.73	10.29	6.32	1.08	4.51	4.78
TOF	38.77	26.50	12.82	5.80	1.99	11.10	3.02
TOF+BOF	47.37	27.72	11.53	7.37	1.40	1.05	3.51
			Medium farms				
BOF	61.07	17.56	7.63	2.78	3.47	2.22	5.27
BOF+THF	53.68	18.29	9.36	4.95	3.02	5.16	5.54
TOF	50.83	25.64	11.90	5.01	1.64	1.67	3.11
TOF+BOF	46.85	24.88	10.84	4.47	1.78	4.25	7.03
			Large farms				
BOF	55.95	18.52	10.93	5.38	4.57	0.65	4.00
BOF+THF	56.96	22.08	7.42	3.15	3.90	0.93	5.57
TOF	48.96	24.22	13.90	2.80	1.84	5.68	2.60
TOF+BOF	53.12	24.31	12.60	3.44	1.29	1.44	3.80
			Overall				
BOF	58.94	17.96	8.85	3.75	3.67	1.99	4.84
BOF+THF	53.98	20.39	9.00	4.75	2.72	3.86	5.30
TOF	47.83	25.52	13.02	4.03	1.87	4.85	2.88
TOF+BOF	50.85	25.12	11.97	4.09	1.45	2.25	5.07

cropping intensity (I) and cropping intensity (II) was calculated considering sugarcane as a single crop and as equivalent to two crops, respectively. The cropping intensity on small sized TOF and TOF+BOF was significantly higher in comparison to that of small sized BOF and BOF+THF when the cropping pattern (I) was considered. But, the differences in cropping intensities on medium and large sized farms were not significant among different categories of farms. The cropping intensities on all size groups of farms of TOF and TOF+BOF were significantly higher in comparison to that of BOF and BOF+THF when cropping pattern (II) was considered to have been adopted. This was due to the allocation of higher proportion of area for cultivation of longer duration sugarcane crop on tractor-owning farms.

Irrigated Area

The proportion of irrigated area will have a corresponding potential for labour employment and farm income generation. **Table 2** indicates that the average irrigated area (in percentage) per farm was not significantly different among different categories of farms for small- and medium-sized groups of farms. However, for large farms it was significantly higher on TOF and TOF+BOF as compared to that of BOF and BOF+THF. The aggregate percentage of irrigated area for farms owning tractors (TOF and TOF+BOF) was marginally higher than that of BOF and BOF+THF.

Cropping Pattern

Table 3 shows the proportion of area planted to various crops in total cropped area for different size groups and categories of farms. It indicates that farmers in the area under study adopted a diversified cropping pattern. Cereals (wheat, jowar, bajra), sugarcane, cotton and groundnut were the major crops grown on all categories of farms. However, the percentage of area under cereals was higher on BOF and BOF+THF as compared to TOF and TOF+BOF, while the reverse was the case in respect of cash crops like sugarcane and cotton. On bullock-operated farms the percent area under sugarcane increased marginally with the increase in farm size but it decreased with the increase in farm size in case of TOF and TOF+BOF. The area planted to vegetables and pulses occupied about 4 to 7% and green fodder about 3 to 5% of the total cropped area on different categories of farms.

The higher percentage of area under cash crops on TOF and TOF+BOF as compared to BOF and BOF+THF obviously, had important implications on human labour employment and farm income.

Employment of Human Labour

The information relating to per hectare employment (on cropped hectare basis) on different farm size groups and their aggregate for different categories of farms is given in **Table 4**. The total labour employment was highest on small farms and decreased as the farm size increased in respect of all the categories of farms. At the overall level, the human labour employment was highest for TOF, followed by TOF+BOF, BOF+THF and BOF. Similar results were also reported by Chauhan et al (1981) in Uttar Pradesh. On all categories of farms the ratio of family labour to total labour employed per hectare decreased with an increase in farm size. On an average, the per-hectare employment of hired labour and total labour was higher by 39 and 24% on TOF and by 44 and 22% on TOF+BOF, respectively, than that of BOF. Similarly, the per-hectare employment of hired labour was higher by 27% and of total labour by 10% on TOF than that of BOF+THF. The hired and total labour employment was higher by 31 and 8%, respectively, on TOF+BOF as compared to BOF+THF. The percentage of hired labour employed was 65 to 80%, 67 to 78%, 78 to 88% and 78 to 91% of the total labour employed on different farm size groups of BOF, BOF+THF, TOF

Table 4 Per Hectare Employment of Human Labour

(Mandays)

Farm size group	Bullock operated farms			Bullock operated plus tractor hiring farms			Tractor operated farms			Tractor plus bullock operated farms		
	Family labour	Hired labour	Total	Family labour	Hired labour	Total	Family labour	Hired labour	Total	Family labour	Hired labour	Total
Small farms	39.30 (34.75)	111.46 (62.25)	170.76 (100.00)	65.59 (32.77)	134.57 (67.23)	200.16 (100.00)	54.63 (22.41)	178.76 (77.59)	230.41 (100.00)	46.74 (21.52)	170.46 (78.48)	217.20 (100.00)
Medium farms	42.10 (25.54)	122.73 (74.46)	164.83 (100.00)	56.46 (30.54)	128.42 (69.46)	184.88 (100.00)	38.00 (18.41)	168.46 (81.59)	206.46 (100.00)	30.86 (15.12)	173.27 (84.88)	204.13 (100.00)
Large farms	31.91 (19.86)	128.75 (80.14)	160.66 (100.00)	38.88 (21.96)	138.20 (78.04)	177.08 (100.00)	22.60 (11.51)	173.67 (88.49)	196.27 (100.00)	16.85 (8.59)	178.64 (91.41)	196.52 (100.00)
Overall	40.74 (24.72)	124.06 (75.28)	164.80 (100.00)	50.04 (26.88)	136.12 (73.12)	186.16 (100.00)	32.26 (15.75)	172.22 (84.25)	204.42 (100.00)	22.85 (11.39)	177.98 (88.61)	200.86 (100.00)

Figures in parentheses are index numbers – BOF=100.

and TOF+BOF, respectively. This higher percentage of hired labour employment with the increase in farm size, in general, and particularly on tractor owning farms disproves the general opinion held regarding replacement of human labour by mechanization of farming.

Table 5 Gross Farm Income on Different Categories of Farms

(Rs. per ha)

Farm size group	BOF	BOF+THF	TOF	TOF+BOF
Small Farms	7 175 (100.00)	9 164 (127.70)	11 118 (154.90)	9 822 (137.00)
Medium Farms	7 065 (100.00)	7 707 (109.10)	10 002 (141.60)	9 468 (134.00)
Large Farms	7 436 (100.00)	7 713 (103.70)	9 039 (127.60)	9 584 (128.90)
Overall	7 219 (100.00)	8 171 (113.20)	9 672 (134.00)	9 575 (132.60)

Figures in parentheses are index numbers BOF=100.

Farm Business Analysis

Gross Returns

The value of production was arrived at by ascertaining from the farmers the amounts received for the produce sold and by imputing the value for the produce retained by farmers for self consumption or as seed material. Similarly, the value of the crop residues was also arrived at. Thus, the gross returns per farm as well as per hectare of were calculated for different sizes and different categories of farms separately. **Table 5** shows the per-hectare farm returns for different farm sizes and categories.

The gross returns on BOF were lowest and on TOF the highest for all size groups. Per-hectare productivity on TOF+BOF was also higher than that on BOF and BOF+THF. On an average, the gross returns were higher by about 33 to 34% on tractor-owning farms than those on bullock-operated farms. Among different size groups, the gross return was highest on large farms of BOF but in case of BOF+THF, TOF and TOF+BOF the small farms gave highest gross returns.

Expenditure on Yield Increasing Technology

The per-hectare productivity on farms is not only related with the cultivation practices adopted but also the level of input use and the cropping pattern adopted on the farms. Considering this the expenditure on four major yield-increasing-inputs was estimated on different categories and size groups of farms and shown in **Table 6**.

The details of per-hectare expenditure on yield increasing inputs, viz, manures and fertilizers, seed, irrigation and plant protection given in **Table 6** indicate that the expenses on these inputs were, in general, higher on small farms followed by medium and large farms. Within each size group of farms, tractor-owning farms have shown higher expenditure when compared with other categories and the least being on bullock-operated farms. It can be seen from the table that at aggregate level the value of manures and fertilizers applied per hectare on tractor-owning farms was higher by 37 to 44% than that of bullock operated farms and by 19 to 23% than that of bullock farms hiring tractor services. The expenditure on seed was 35 to 40% and 19 to 23% higher on tractor owning farms as compared to bullock operated farms and bullock farms hiring tractors, respectively. On plant protection also the per hectare expenses on tractor owning farms were higher by 57 to 66% and 14 to 21% as compared to bullock farms and bullock farms hiring tractors, respectively.

Overall, expenditure on four inputs was higher by about 40% on TOF and 38% on TOF+BOF as compared to BOF. On BOF+THF the expenditure on inputs was higher by about 17% than that of BOF. Thus, one of the reasons for higher productivity on tractor owning farms and tractor using farms (BOF+THF) might be the higher use of inputs which in turn might have been necessitated by the crops grown. The results of this study

coincide more or less with the findings reported by Lal et al (1976) in Uttar Pradesh.

Net Returns

The per-hectare net return was calculated by deducting the per-hectare expenditure on seeds, manures and fertilizers, irrigation, plant protection, human labour (hired as well as family labour considering the imputed value), bullock labour and tractor power from the per hectare gross returns of main plus by-products. As will be seen from **Table 7**, on all size groups of farms the per-hectare net profit on TOF and TOF+BOF was significantly higher than that on BOF. On small and medium size groups the income was markedly higher on BOF+THF than that of BOF. The per unit net returns increased with an increase in farm size in the case of BOF. This indicates that the resource use efficiency increased with the increase in farm size on BOF. On the contrary, the net returns decreased with an increase in farm size in case of TOF and BOF+THF. On tractor plus bullock operated farms this was higher on small farms as compared to medium and large farms. Thus, small size tractor owning farms were more efficient as compared to medium and large size farms.

Table 6 Per Hectare Expenditure on Inputs

(Rs.)

Farm category	Manures and fertilizers	Seed	Irrigation	Plant protection	Total
		Small farms			
BOF	832.50	356.00	386.00	94.30	1 668.80
BOF+THF	895.50	473.10	490.40	127.70	1 986.60
TOF	1 185.90	529.20	556.20	184.90	2 456.20
TOF+BOF	924.40	540.00	508.00	106.00	2 078.40
		Medium farms			
BOF	723.40	322.30	360.70	74.90	1 481.30
BOF+THF	840.10	362.60	437.90	131.90	1 772.50
TOF	1 057.10	509.90	529.00	116.20	2 212.20
TOF+BOF	1 019.20	485.00	424.00	135.00	2 063.20
		Large farms			
BOF	680.10	373.80	384.20	81.10	1 519.20
BOF+THF	835.00	370.40	470.60	69.30	1 745.30
TOF	944.50	450.90	520.00	130.40	2 045.80
TOF+BOF	1 119.00	446.00	473.00	145.10	2 183.10
		Overall			
BOF	743.30	346.40	376.20	83.00	1 548.90
BOF+THF	857.80	392.60	449.90	114.00	1 814.30
TOF	1 018.60	483.60	528.00	130.80	2 161.00
TOF+BOF	1 070.20	467.50	462.30	136.00	2 138.00

Table 7 Net Farm Income on Different Categories of Farms

(Rs. per ha)

Farm size group	BOF	BOF+THF	TOF	TOF+BOF
Small Farms	4 149 (100.00)	5 407 (130.30)	6 746 (162.57)	5 998 (144.49)
Medium Farms	4 285 (100.00)	4 675 (109.10)	6 955 (141.31)	5 640 (131.62)
Large Farms	4 637 (100.00)	4 572 (98.59)	5 363 (115.66)	5 709 (123.12)
Overall	4 363 (100.00)	4 853 (111.24)	5 801 (132.96)	5 758 (131.97)

Figures in parentheses are index numbers. Bullock operated Farms=100.

Conclusions

The results of the investigation presented in this paper warrant the following conclusions.

Tractorization, together with high cropping intensity, adoption of cash crops and intensive use of seed-fertilizer-irrigation inputs had generated additional human labour employment potential and it was 36 to 39 mandays per hectare of gross cropped area in this particular study. The use of tractors enables farmers, inter alia, to achieve higher levels of productivity per unit of land as with their help the preparatory tillage and other operations can be carried out satisfactorily and timely. Therefore, it can be contended that the presumed labour displacement effects of tractorization need not be a reality, particularly in the context of greater intensity of cropping, higher productivity per unit of land and adoption of labour-intensive crop cultivation.

More efficient use of resources on large sized bullock-operated farms and on small sized tractor owning farms and bullock plus tractor hiring farms was observed. There was a direct relationship between farm size and economic efficiency expressed in terms of returns over the variable costs per hectare on bullock operated farms. However, the reverse was the trend in case of bullock-operated farms hiring tractor and tractor operated farms. Among the tractor-operated farms and bullock-operated farms the level of economic efficiency was observed to be higher on the former category in respect of all size groups.

It may, therefore, be concluded that tractorization, in effect, had not only helped in achieving the objective of higher productivity and efficiency but had favoured the increase in the human labour employment in the area under study. Thus, mechanization can be desirable and recommended subject to region specificity.

(Continued on page 45)

Lining Irrigation Canals with Asphaltic Materials in Bangladesh

by
A. Khair
Asst. Prof.
Dept. of Irrigation and Water Management
Bangladesh Agric. Univ.
Mymensingh, Bangladesh

S.C. Dutta
Asst. Prof.
Dept. of Irrigation and Water Management
Bangladesh Agric. Univ.
Mymensingh, Bangladesh

Abstract

Studies were made to investigate the scope for the application of bituminous (asphaltic) materials for lining small irrigation canals in Bangladesh. Locally available bitumens and other low-cost indigenous materials were used to develop suitable asphaltic lining. The characters of these linings were tested under field condition. The following two types of prefabricated asphalt mats have shown the promise as canal liners for minor irrigation project areas in Bangladesh: i) Gunny (coarse sack cloth made of jute) reinforced asphalt mat and ii) Synthetic cloth (fertilizer bag made of synthetic fibre) reinforced asphalt mat.

Introduction

The losses of irrigation water in the conveyance and distribution systems mainly occur in the form of seepage, evaporation, operational losses and tail water loss (waste). Out of these losses, seepage loss through bottom and sides of irrigation canal is of utmost concern. The U.S. Bureau of Reclamation (1963) records from 46 irrigation projects show that losses range from 3% to 86%. Dutta (1981) conducted experiments in three minor irrigation projects in Bangladesh and reported that conveyance loss through the main canals in the project areas is as high as 60% of the total water diverted. Jenkins (1981) reported that there is as much as 50% loss of water in 1 000 ft (305 m) of 2 cusec (0.056 m^3/s) earth channel in Bangladesh.

Seepage losses in an unlined channel cause much loss of valuable irrigation water. In porous soil formation, the whole supply of diverted water in the irrigation canal may be lost if lining is not done.

The Government of Bangladesh has launched a comprehensive programme to bring a large portion of cultivable land under irrigated agriculture through shallow tube-wells, deep tube-wells and low-lift pumps. But many of the projects so far completed have proved to be either slow or low-yielding. Even the Bangladesh Agricultural Development Corporation (BADC) could not attain the target irrigation coverage of 60 acres by using 2 cusec water source. Biswas et al. (1978) reported that in Bangladesh average coverage per cusec (0.028 m^3/s) of deep tube-well, shallow tube-well and low-lift pump are 9.06, 6.08 and 7.95 ha, respectively. The poor coverages are mainly due to the losses of irrigation water through the bottom and sides of irrigation canals. Besides such heavy losses of irrigation water, excess seepage losses also contribute to water logging of agricultural lands, salt and alkali concentration in the soils, costly maintenance of road and drainage systems. To save the losses of valuable irrigation water and to avoid other related field hazards as well, lining of irrigation canal may be feasible in many cases depending on the local conditions, amount of water losses and lining cost.

Canal linings may be done with a large varieties of materials. Though, the selection of lining material is governed by functional requirement and site condition, comparative costs are generally a determining factor in selection. Concrete more or less meets all of the requirements for a lining than any other materials. But its high initial cost leads to the use of low-cost indigenous materials for canal lining. The estimated cost for 100 sq. ft. (9.29 m^2) of a pucca (lined with brick) typical field canal capable of carrying 2 cfs (0.056 m^3/s) water is nearly U.S.$450 in Bangladesh. Although brick masonry and stone masonry are commonly used in many developing countries as low-cost materials for lining main canals, branches and distributions, the cost of lining becomes prohibitive when these methods are used for small canals. The objective

of this study is, therefore, to investigate the scope for the application of bitumen and other indigenous low-cost materials for lining smaller canals in minor irrigation project areas.

The economy of Bangladesh has been characterized by labour surplus economy. In labour-surplus economics, there is a scope for the application of labour-based technology and the use of indigenous resources for the execution of irrigation projects. Irrigation can play a very important role in labour absorption and also in overall socio-economic development of the country. Therefore, the present programme is oriented to the application of canal lining technologies which are directed towards the employment generation in rural areas.

Experimental Investigation

Bitumen and other low-cost indigenous materials were selected to enable a study of their suitability as irrigation canal lining materials. The materials seemed to be suitable as canal liners and available in Bangladesh at low-cost were collected for this study.

The following materials were selected for the preparation and construction of asphaltic canal liners: Bitumen emulsion (U-10); tar and asphalt; polythene sheet; gunny (coarse sack cloth made of jute); fertilizer bags (knitted with a kind of synthetic fibres); saw-dust; rice husk; and coarse sand.

Initially, an attempt was made to fabricate asphalt mats using bituminous materials at different proportions and rates. Asphaltic materials were sprayed on different tupe of flexible membranes for obtaining waterproof mats. For preliminary investigation, different types of canal liner using bituminous materials were prepared in the following ways:

A. Prefabricated asphalt mat (Jute-reinforced asphalt mats)

i) Gunny (coarse sack cloth made of jute) impregnated with cold bitumen emulsion (U-10).
ii) Gunny impregnated with tar and sprayed with sand.
iii) Gunny impregnated with both bitumen emulsion (U-10) and tar at different proportions.
iv) Gnny impregnated with hot asphalt.
v) Gnny impregnated with both hot asphalt and tar at different proportion.

B. Prefabricated Asphalt Mat (Fertilizer bag-synthetic cloth reinforced asphalt mat)

i) Fertilizer bag impregnated with bitumen emulsion (U-10).
ii) Fertilizer bag impregnated with hot asphalt.
iii) Fertilizer bag impregnated with tar and hot asphalt at different proportions.
iv) Fertilizer bag impregnated with bitumen emulsion (U-10) and tar.

C. Exposed Membrane Linings

i) Thin membrane of hot asphalt (3-5 mm) sprayed on subgrade.
ii) Thin membrane of bitumen emulsion: U-10 (3-5 mm) sprayed on subgrade.
iii) Polythene sheets coated with bitumen emulsion (U-10).

D. Buried Membrane Linings (covered with available soils)

i) Sprayed in place asphalt (3-5 mm).
ii) Sprayed in place bitumen emulsion: U-10 (3-5 mm).
iii) Bitumen emulsion coated polythene sheets.

E. Bitumen with Inert Dust Materials

i) Bitumen (U-10) with sawdust at different proportions.
ii) Bitumen (U-10) with ricehusk at different proportions.

F. Asphalt Sand

i) Mixture of asphalt and sand at different proportions.
ii) Mixture of bitumen emulsion (U-10) and sand at different proportions.

All types of exposed and buried linings as mentioned above were tested in field canals under typical field condition in Bangladesh. Their durability, suitability and practicability were observed at the field level. Most of the above liners proved to be useless and impractical. All buried and exposed membrane linings were damaged by burrowing animals, livestock traffic and weed puncture within a few months of installation.

The membrane linings have very little or no resistance to the various field hazards. Although they possess low permeability, they have no structural strength to resist weed and animal hazards. The mats, those were prepared using tar and asphalt were also deteriorated from sun and weather during the observation period. The prefabricated mats made of bitumen emulsion (U-10) seemed to be relatively resistant and durable.

After a large number of trials and investigations at field level, the following two types of promising asphalt mats were selected in order to study their qualities related to water tightness, cost, roughness and other performance at the field level:

A. Gunny reinforced asphalt mat: Made of gunny (coarse sack cloth made of jute) and bitumen emulsion (U-10).

B. Synthetic cloth reinforced asphalt mat: Made of fertilizer bag (coarse sack cloth made of synthetic fibres) and bitumen emulsion (U-10).

Determination of Seepage Losses of the Selected Linings (asphalt mats)

The ponding method was employed for measuring the seepage losses of selected canal linings. For this purpose, field channels (lined with selected asphalt mat) of the following dimensions were closed at both ends by impermeable planks):

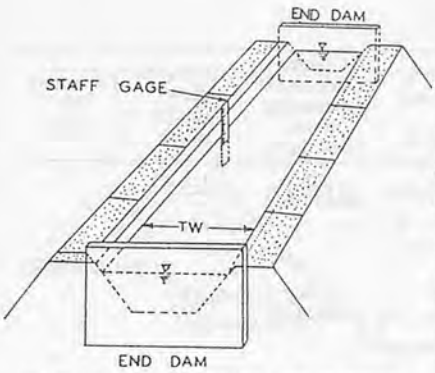

Fig. 1 Setup for ponding loss measurement

- bed width, b = 0.60 m;
- side slope, i = 1:1;
- length, L = 5.0 m; and
- depth, d = 0.3 m.

Fig. 1 shows the layout for ponding seepage loss measurement of the linings.

The following formula was used for computing the rate of seepage.

$$S = \frac{24W\,(d_1 - d_2)\,.\,L}{PLt} \quad \ldots . (1)$$

Where, S = seepage rate in $m^3/m^2/$day;

W = average width of water surface in m;

d_1 = depth of water in m at the beginning of measurement;

d_2 = depth of water in m after t;

P = average wetted perimeter in m;

t = time interval between d_1 and d_2 in h, and

L = length of canal in m;

The seepage losses data of the selected canal liners were collected for a period of a week continuously at different time interval. **Fig. 2** shows the rates of seepage losses through the canals lined with the selected asphalt mats. The seepage rate curve of these linings gradually reduced to a constant rate; and this rate was considered as the seepage rate of the linings.

The seepage losses through the jute reinforced asphalt mat averaged 0.0035 m^3/m^2/day and the same was about 0.0030 m^3/m^2/day for the fertilizer bag reinforced asphalt mat.

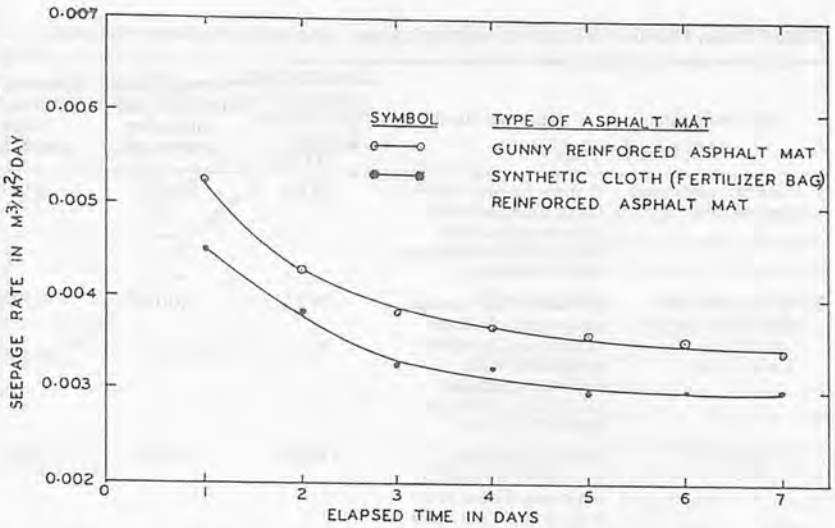

Fig. 2 Seepage rate through the canals lined with asphalt mat.

Computation of Manning's 'n' for the Selected Canal Linings

The carrying capacity of a canal is dependent upon its roughness. To design a canal capable of carrying a desired quantity of water, the extent of roughness offered by the lining materials must be known.

Roughness coefficient (Manning's 'n') of the linings were calculated by rearranging the Manning's equation as in the following form:

$$n = \frac{AR^{2/3}\,m^{1/2}}{Q} \quad \ldots\ldots . (2)$$

where,

n = roughness coefficient of canal linings;

A = cross-sectional area of the channel, m^2;

Q = discharge rate, m^3/s.;

R = hydraulic radius; and

m = bottom slope of the channel.

The channel with the following dimensions at the field was used for computing 'n':

Length, L = 30 m;

Bottom width, b = 30 cm;

Top width, T = 60 cm;

Depth, d = 30 cm; and

Bottom slope, m = 0.001.

The discharges in the channel were measured by a standard type V_ notch when the flow was steady. The data (area and wetted perimeter of the channel) in the channel were recorded for varying depths of flow rate for each type of lining. These values (channel dimensions and discharge data) were inserted into the equation (2) and was solved for roughness coefficient 'n'. The average value of roughness (n) for both the type of prefabricated asphalt mat was 0.018 when the canal was clean and smooth.

Finally, the cost of these linings were calculated considering a typical farm irrigation canal capable of carrying two cusec (0.056 m^3/s) water. The cost figures shown in **Table 1** are only the construction cost and do not take into consideration service life or maintenance requirement.

Results and Discussion

The selected asphalt (prefabricated asphalt mats) linings and their main features obtained from the field test and field observation are given in **Table 1** along with other traditional technologies that are

Table 1 Main Features of Selected Asphalt Linings Compared with Other Materials

Type of lining	Materials used	Construction cost (1983) per running meter[1] (Tk)[2]	Seepage losses ($m^3/m^2/day$) just after construction	Manning's 'n' (smooth and clean condition)	Labour requirement per running meter (man days)	Allowable flow velocity (m/s)	Expected life (yrs.)
1. Gunny reinforced asphalt mat.	Gunny (coarse sack cloth made of jute) impregnated with bitumen emulsion per 100 m^2 of mat	28.00	0.0035	0.018	1/6 (unskilled)	1-1.5	2
2. Synthetic cloth (fertilizer bag) reinforced asphalt mat.	Fertilizer bag (coarse sack cloth made of synthetic fibres) impregnated with bitumen emulsion (U-10) @ 110 kg per 100 m^2 of mat	29.50	0.0030	0.018	1/6 (unskilled)	1-1.5	5
1. Brick lining	Brick in cement mortar (1:6) on 2.5 cm poured concrete concrete (1:3:6) pad with 0.5 cm inside plastering (1:4). Thickness 13 cm.	190.00	0.048	0.015	1/5 (skilled) 1/4 (unskilled)	1.5-2.0	15
2. Compacted canal[3]	–	5.00	0.15	0.022	1/5 (unskilled)	0.35-0.75	One irrigation season
3. Unlined and compacted	–	–	1.01	0.025	–	0.35-0.75	–

(1) Cost required to line a typical farm irrigation canal capable of carrying 2 cfs (0.057 m^3/s) water.
(2) US$ 1 = Tk 25.00
(3) Only sub-grade (base soil) is compacted in situ by Mannual rammer and Mallet. The base soil was silt-loam in character.

practised for minimizing water losses in Bangladesh.

The objective of this experiment was to fabricate canal linings using bitumen and other low-cost materials available in Bangladesh. After field test and long observation, the canal linings which proved to be relatively durable, comparatively impermeable and practicable at the farmer's field were selected.

The important factors affecting seepage rate such as the shape of the channel, the depth of an impervious layer and the depth of the ground water surface were ignored during seepage rate calculation.

The experimental results showed that the fabricated asphalt mats reduced seepage losses considerably. In the experimental area, the losses through the uncompacted and unlined canal was about 1.01 $m^3/m^2/day$ whereas, the average losses through the asphalt mat in the same area range from 0.0030 to 0.0035 $m^3/m^2/day$ only.

The synthetic fibre reinforced (fertilizer bag) asphalt mat is more durable than gunny reinforced asphalt mat and impervious in comparison to brick and earth linings. The cost required to line a typical irrigation canal with this mat is Tk.29.50 only per running metre. The cost for the same unit of pucca (brick lining) canal is Tk.55.00.

Where fine-textured soils are available and lower initial investment is desirable, the compaction of the natural sub-grade may be practiced to minimize canal losses. Compaction of sub-grade is a temporary method and its effectiveness does not last even a full irrigation season due to various field hazards. On the other hand, high initial investment is required for hard surface (brick, concrete etc.) linings. Although, the asphalt mat is costlier than compaction it is more impervious and stable and capable of carrying discharges at higher velocity.

The life of asphalt mat depends on proper maintenance, because burrowing animals and weed puncture are the main field hazards and reduce the serviceable life of this type of linings. For properly constructed and maintained prefabricated asphalt mat (reinforced with synthetic cloth), a serviceable life of at least 5 years is expected.

The prefabricated asphalt mat may show promise in Bangladesh as a canal liner for smaller irrigation canal because the mat also has multipurpose utility and raw materials for fabrication are available at local markets.

One hundred sq. m of synthetic cloth reinforced mat needs only 110 g. of bitumen emulsion (U-10) to be impregnated. Bitumen emulsion (U-10) is used as a liquid and no heat is required. After its application, it gradually becomes hard and makes the mat impervious. After the bitumen emulsion has hardened the mats are rolled up. Mat size depends on the size of the channel. The asphaltic mat is resistant to scouring and capable of carrying discharges at a velocity of about 1-1.5 m/s if the sub-grade is

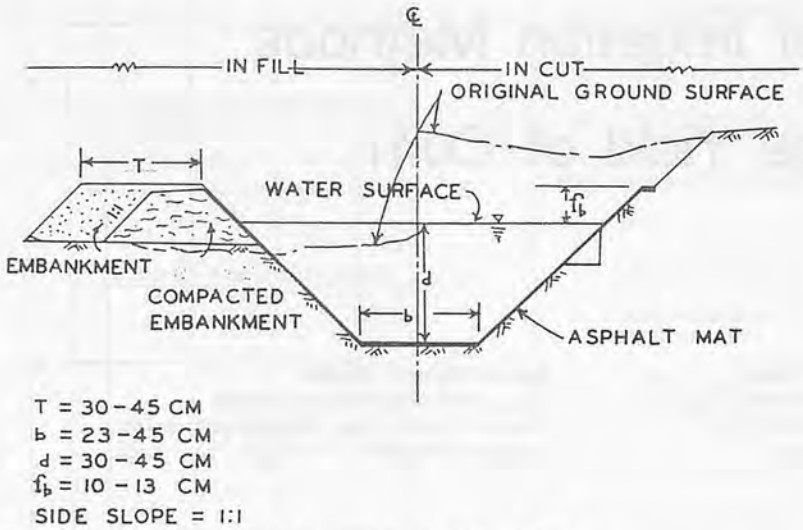

Fig. 3 Typical cross-section of a channel lined with asphalt mat.

stable enough. The Manning's 'n' for smooth and cleaned asphalt mat lined canal is about 0.018.

In small channels, the mats may be placed length-wise and in large channels cross-wise. The ends of the mats are stuck together with bitumen emulsion or there should be an overlap of 15 cm on both ends of the mat. **Fig.** 3 shows the canal lined with asphalt mats. The mat may be left exposed and can be placed by hand. The base soil should be cleaned of all vegetation, organic and loose material and compacted sufficiently before placing the mat on the canal bed.

Lining with asphalt mat is relatively cheaper and quick method of making a canal lining system. After irrigation, the famers may also use the mats to cover farm products and their houses, and also for drying farm products quickly.

Lining irrigation with asphalt mat is low-cost labour intensive technology. It will not only improve irrigation command but also will create employment opportunities for unemployed rural people.

REFERENCES

Anon, 1983. Linings for Irrigation Canals. United States Department of the Interior. Bureau of Reclamation. United States Government Printing Office, Washington D.C. P. 149.

Biswas, M.R. and other. 1978. An Investigation into the Factors Affecting the Command Area of Different Irrigation Facilities in Bangladesh. Bangladesh Agricultural Research Council, Dhaka, Bangladesh, P. 24.

Dutta, S.C. 1982. Some Aspects of Irrigation Management in Selected Areas. Workshop on On-Farm Irrigation and Water Management Problems. Bureau of Socio-economic Research and Training, Bangladesh Agricultural University, Mymensingh. P. 101.

Jenkins, D. 1981. Irrigation Water Distribution System for Tgbewells and Low-lift pumps in Bangladesh. USAID, P. 14. ■■

(Continued from page 40)

Implications of Tractorization on Employment, Productivity and Income in an Irrigated Area of Ahmednagar District, India

REFERENCES

Chauhan, Y.S., S. Singh and T.R. Singh, 1981. Impact of arm mechanization on labour use in Block Kalyanpur, District Kanpur, Ind. Jour. Agril. Econ., 26(4): 56.

Lal, J., L.R. Singh and R.V. Singh, 1976. Resource productivity in relation to farm mechanization, Ind. Jour. Agril. Econ. 31(4), 145-150.

Motilal, G., 1973. Economics of tractor utilization, Ind. Jour. Agril. Econ., 28(1): 96-105.

NCAER, 1981. Implications of tractorization on farm employment, productivity and income. Report, NCAER, New Delhil.

Rajkrishna, 1974. Measurement of the direct and indirect employment effects of agricultural growth with technical change, in Employment in Developing Nations, Ed. E.O. Edwards, Columbia University Press, New York.

Sharma, R.K., 1972. Economics of tractor versus bullock cultivation: A pilot study of Haryana, Agricultural Economics Research Centre, University of Delhi.

Singh, R. and B.B. Singh, 1970. Farm mechanization in Western Uttar Pradesh, Indian Society of Agricultural Economics, Seminar Series 9: 141-150. ■■

Effect of Irrigation Methods on Silage Yield of Corn

by
Imam Bux Koondhar
Dean, Faculty of Agric. Engg.
Sind Agriculture University
Tandojam, Pakistan

Bashir Ahmed Chandio
Assoc. Prof., Irrigation and Drainage
Faculty of Agric. Engg., Sind Agriculture Univ.
Tandojam, Pakistan

Bherulal T. Devrajani
Principal Investigator
Sind Agric. Univ.
Tandojam, Pakistan

Abstract

The performance of the corn crop as influenced by three irrigation methods was evaluated through a one-year field experiment at Sind Agriculture University, Tandojam. Irrigation treatments included border irrigation with syphon, furrow irrigation with syphon, and furrow irrigation without syphon. At the time of sowing, water was applied at 1 in. rate and three subsequent irrigations were given at the rate of 2 in. The consumptive use for the period was 7 in.; distance between rows was 2.5 ft and hill spacing was 5 in.

Introduction

In arid and semi-arid regions of the world, the shortage of irrigation water is one of the main production constraints. Vast areas of cultivable land in Pakistan have turned into deserts due to scarcity of irrigation water coupled with unjudicious use of water which has escalated the water logging and salinity problems. It is necessary to find ways and means of reducing irrigation losses in the storage, conveyance, distribution and application. Efficient use of irrigation water is important to economize water use for more land to come under profitable crops.

Corn is a very important food grain and fodder crop. The demand for silage and dry fodder is continuously increasing. Its role as a food crop is well established. As a fodder, corn can be grown well almost all year round where temperature does not drop below 18°C and 13°C at the times of germination and growth, respectively. The present study was conducted with the objective of finding suitable irrigation methods which could increase field application efficiency that is accompanied by optimum tillage practices.

Materials and Methods

An experiment was conducted on a plot of 423 x 153 ft, to compare the effects of three irrigation methods on the yield of hybrid corn ("Akbar"). At the time of sowing, diammonium phosphate was applied at the rate of 20 and 50 lb per acre of N and P_2O_5, respectively. Urea was applied as a side dressing at the rate of 50 lb N per acre on 2nd December. The plant population was maintained at 41 817 plants per acre.

A completely randomized plot design was adopted. Two borders 16.25 ft each were left, the central (112.5 feet) was divided into three 37.5 ft strips, randomly distributed for border irrigation with syphons, and furrows with and without syphons. Every strip, divided into 2.5 ft wide dikes from each other, was further subdivided into 9 plots each having 35 feet long separated from each other by field ditches of 5 ft or dikes of 2.5 ft. To eliminate border effects, 18-ft and 50-ft long strips were left.

The row-to-row distance in both basins was 2.5 feet wide and hill spacing of 5 in. on each row. Cutthroat flumes were installed at the inlet of each field ditch which served three plots from its each side through check structures **(Fig. 1)**.

Before starting, the entire experimental area was disked, levelled

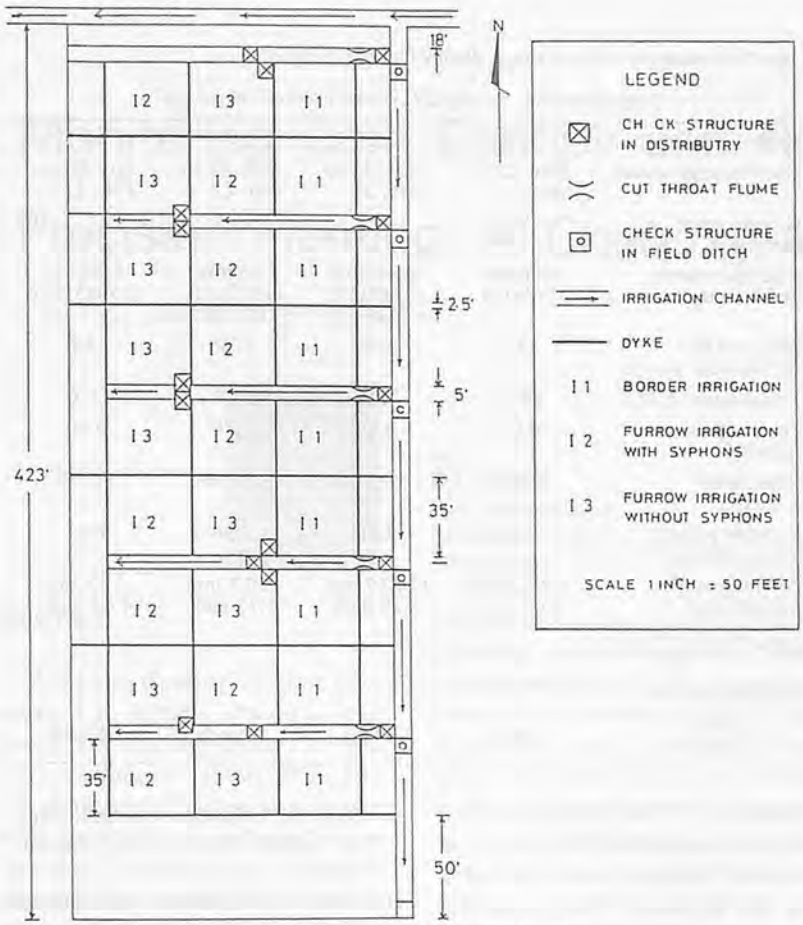

Fig. 1 Layout of the experiment.

and harrowed by tractor implements. The field was marked for borders, experimental plots, dikes and field ditches. Ridges and furrows were prepared by tractor-drawn three bottom ridger. The dikes and channels were laid out manually. Sowing in the plots was carried out by placing three seeds per hill spaced at 5 in. from each other on 22nd October. Borders were also planted to maintain the same micro-climate. Flumes were installed for free flow conditions following Gaylord et al (1973) at the inlet of each field ditch and the check structures were installed in the field ditches so as to irrigate only one plot at a time to minimize seepage losses. Immediately after sowing, 1 in. irrigation was applied uniformly for germination while the other three doses were applied at the rate of 2 in. on the 1 st and 16 th November and the 2nd December. Bulk density was determined for 18 in. depth for every 6 in. separately through the core method while moisture contents were determined for the same depths before each irrigation. At the same time meteorological data were recorded for computation of potential evapotranspiration through the Blaney Criddle method.

At the emergance of tassels, harvesting for silage was accomplished by selecting two central rows from each plot. Two and a half feet were left from each row in order to check likely border effects, and the silage yield thus obtained was multiplied by 290.4 to convert yield per acre. The effects of three irrigation methods on the silage yield were statistically analyzed following Snedecor and Cochran (1973) and the "F test" was applied to determine the significance within treatments.

Results

Results for silage yield in tons per acre from all plots may be observed from **Table 1**. Where I_1 denotes border irrigation using syphon, I_2 as furrow irrigation using syphons and I_3 as furrow irrigation without syphons.

Though there was an increase in yield from I_3 to I_2 and I_1, statistically, there was no significant difference in the effect of irrigation methods on the silage yield (**Table 2**). All treatments behaved almost alike probably because the flow conditions in furrow irrigation were simulated in border irrigation. The use of syphons at a width equal to furrow width restricted the lateral movement of water. As the length of run in furrow and flat beds was similar the extent of lateral movement in both methods had nearly similar irrigation efficiency. This was in agreement with Arar (1971) who also reported that efficient use of irrigation water depends on the

Table 1. Yield of Silage as Affected by Three Irrigation Methods

	I_1	I_2	I_3	Total t/acre
	5.83	9.07	5.10	20.00
	16.20	9.72	10.37	26.29
	12.32	11.67	9.72	33.71
	10.39	9.72	7.78	27.89
	9.72	7.72	7.13	24.64
	10.37	9.72	12.96	33.05
	10.37	9.72	3.89	23.98
	10.37	7.13	3.80	21.03
	11.10	11.10	11.67	33.87
Total	96.67	85.64	72.50	245.81

Table 2 Analysis of Variance for Yield of Corn

Source of variation	Degree of freedom (D.F.)	Sum of squares (S.S.)	Mean squares (M.S.)	F		
				Calculated value	Tabulated value	
					5%	5%
Irrigation	2	32.54	16.27	2.37	3.40	5.61
Error	24	164.21	6.84	–	–	–
Total	26	196.75	–	–	–	–

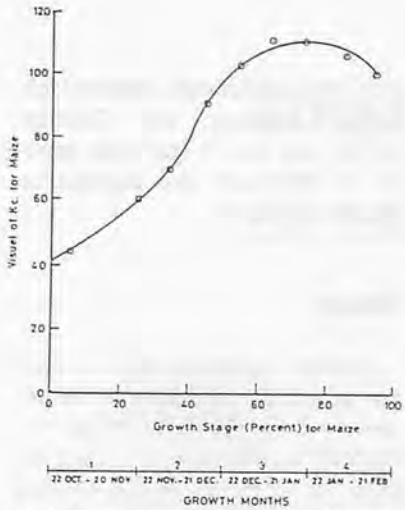

Fig. 2 Growth stage factor "Kc" vs crop growth stage.

extent of lateral movement of water, and according to Doorenbos (1975) furrow irrigation had little effect on the total quantity of irrigation water needed. As the date of seed germination and plant emergence for all the treatments was similar and no indication of crust formation was observed, the superiority of furrow irrigation could not be demonstrated as advocated by Israelson and Hansen (1962) and Korven (1972) who also found that border irrigation could be practiced efficiently if lands had minimum grading. But according to Djelouli (1971) and Bishop (1967), the efficiency of border irrigation could be increased by adjusting the flow rate in accordance with the width of strip.

The consumptive use of water was determined by Blaney Criddle method (**Fig. 2**) for which average temperature for the months of October, November, December and January were obtained. The consumptive use of water for corn under no-stress condition was 7.3 in. (**Table 3**) whereas a total of 7 in. water was applied in the field.

Table 3 Consumptive Use through Blaney Criddle Method

Date of sowing: October22; Growth period: 4months

Growth month	1	2	3	4
Growth stage period	Oct. 22 to Nov. 21	Nov. 22 to Dec. 21	Dec. 22 to Jan. 21	Jan. 22 to Feb. 21
Growth stage factor-Kc	52	73	100	103
Calendar month under study	October (52x10)	November (52x21/31 + 73x9/30)	December (73x21/30 + 100x10/31)	January (100x5/31)
Weighted KC for calendar month	17%	56%	85%	16%
Temperature t (°C)	24°C	22°C	18°C	15°C
Temperature factor-Kt	0.98	0.92	0.79	0.70
Crop factor K-KcxKt	16.66%	51.52%	65.57%	11.2%
Monthly percent hour sunshine, P	8.07	7.38	7.38	7.51
Potential evapo-transpiration	154.12 mm 6.07 inch	134.19 mm 5.28 inch	120.7 mm 4.75 inch	112.5 mm 4.43 inch
$ETP=\frac{(45.5t°C+813)P}{100}$				
Consumptive use $U=\frac{ETPxK}{100}$	1 inch	2.7 inch	31 inch	0.5 inch

Conclusion

The silage yield from border irrigation with syphons, furrow irrigation with syphons and furrow irrigation without syphons were obtained at 10.74, 9.51 and 8.05 t per acre, respectively. However, the statistical analysis reveals that there was no significant difference between the irrigation treatments, most probably due to use of syphons. Since less mechanical and physical labour was involved in the preparation of flat beds than furrows accompanied with the feasibility of using tractor drawn drills and fertilizer spreaders, it is recommended that border irrigation with syphons might be preferred over furrows for corn provided there was no danger of surface encrustation. It is also recommended that such work may be conducted on increased length of runs so as to obtain suitable length of run as well as size of plots depending on various irrigation methods on varied soil conditions.

REFERENCES

Arar Abdullah, Surface Irrigation Method and Practices; Water Use Seminar, Damascus, Irrigation and Drainage, Paper 13.

Bishop, A.A., Johson, M.E. and Hall, W.A. Surface Irrigation System, Irrigation of Agricultural Lands, Amer. Soc. Agron., 1967.

Djelouli, S. Methods of Surface Water Application, Water Use Seminar, Damascus. Irrigation and Drainage, Paper 13, F.A.O. Rome, 1971.

Doorenbos, J. Surface Irrigation, Crop Water Requirements Irrigation and Drainage, Paper 24, F.A.O. Rome 1975.

Gaylord. V. Skogerboe Ray. S. Bennet Wynn. R. and Walker, Selection and Installation of Cutthroat Flumes for Measuring Irrigation and Drainage Water, CSU. Tech. Bull. 120. 1973.

Israelson, O.W. and Hansen V.E. Surface and Subsurface Irrigation, Irrigation Principles and Practices, Japan Printing Company Ltd., 1962.

Korven, H.C., Randall, W.E., and Hutcheon; A.D. Surface Irrigation, Irrigation on the Prairies, Canada Department of Agriculture, Publication 1488. P.O. 25, 1962.

Snedecor, G.W., and Cochern W.C. Two Way Classification in Statistical Methods; 6th Edition. The Iowa State University Press, Ames, Iowa, USA, 1973.

Monitoring Corn Canopy and Root by Precision Planting: A Challenge on Planter Design

by
R.C. Yadav
Dept. of Agric. Engg.
Ahmadu Bello Univ.
Zaria, Nigeria

U.S. Gupta
Dept. of Plant Science
Ahmadu Bello Univ.
Zaria, Nigeria

Abstract

Precision planting of corn (*Zea mays* L), kernels proximal end down and flat side along the drill row resulted in about 90% leaf orientation in the inter-row spaces with a majority of roots in the row direction. These canopy and rooting patterns are desirable characters for efficient biological water harvesting and for easy row zone tilling aimed at increasing aeration and weed control. This sets the design criteria and challenge for the design of planter.

Introduction

A uniform and definite canopy pattern is required for efficient biological water harvesting (Yadav, et al, 1982) and for efficient utilization of light energy (Paper, 1975). Some studies on canopy manipulation by mechanical means after seedling emergence and by kernel orientation at seeding, its effect on crop growth and yield have been made (Peters and Wooley, 1959; Prine, 1973, 1977) but there is no information on rooting pattern changes in relation to kernel placement. The process of biological water harvesting, water collection through leaves and storage in the root zone is a recent concept (Yadav et al, 1983) and information on ways and means of achieving this is necessary, crop canopy expansion in the inter-row space with minimum shading so as to collect water from inter-row space and convey along stem down to the root zone is required. Results of some complementary studies on corn leaf and root orientation in relation to kernel placement at seeding are reported here.

Materials and Methods

Flat kernels of corn (*Zea mays* L) cv TZD were chosen for the experiment under field and laboratory conditions. Under field condition, the kernels were seeded in rows orienting in the direction of the sun spaced at 30 cm apart and 5 cm between kernels. Two methods of seed placement; T_1-proximal and down and flat-side along the drill row, and T_2-proximal end down and flat side across the drill row were tried. Seedling emergence and progressive leaf orientation were recorded.

Under laboratory conditions, in the first experiment 20 kernels were sown in each of the triplicate petri-plates on moist filter paper and the direction of root growth was observed. In the second experiment, the kernels were sown under vermiculite in three germination boxes keeping their flat side across the drill row in half of the box and flat side along the drill in the remaining half keeping proximal end always down. Nine days after sowing the seedling were gently uprooted, washed and their leaf and root directions were observed in relation to kernel flat side keeping embryo side in front. The experiment was repeated twice.

Results and Discussion

Leaf orientation in a seedling became apparent after a day of its emergence. Approximately 90% of the seedlings from kernels sown with proximal end down and flat side along the drill row (T_1), leaves expanded in the inter-row space, i.e., perpendicular to row direction and from 80% kernels with proximal end down flat side across the drill row (T_2), oriented along the drill row **(Table 1)**. A similar trend in leaf orientation was found from kernels placed in vermiculite **(Table 1)**. High coefficient of variability of leaf orientation along the drill row **(Table 1)** in both cases of study shows a slightly higher tendency of leaf orientation in the inter-row spaces.

Kernels germinated on the moist filter paper in the petri-plates exhibited that after the emergence of radicle (primary root) and plumule (coleoptile), 2 to 4 second-

Table 1 Orientation of Leaves of Corn (*Zea mays* L.) cv. TZB (Seedling Raised in Field Plots and in Vermiculite)

Seeding method	Leaf orientation (% emergence)	
	Along the drill row	Across the drill row
Grown in field plot		
T_1 - Proximal end down and flat side along the drill row	10.5±0.06	89.5±0.16
T_2 - Proximal end down and flat side across the drill row	80.8±0.70	19.2±0.36
Grown in Vermiculite		
T_1 - Proximal end down and flat side along the drill row	7±1.63	93±0.82
T_2 - Proximal end down and flat side across the drill row	83±1.74	17±0.02

ary roots emerged from the space between coleoptile and kernels and grew upwards (**Fig. 1**). When the kernels were sown in vermiculite, these roots though confirming to similar root numbers were found to bend down to the left or right of the coleoptile in the kernel flat place (**Fig. 2**). The other secondary roots not appearing from the space between coleoptile and kernel, grew across the kernel flat plane and were fewer in number (**Table 2** and **Fig. 2**). The first adventitious root on the seedling stem appeared on the side of the embryo. Thus with regard to kernel orientation it can be said that majority of the leaves orient across the flat plane and majority of the roots along the plane.

Both root and leaf characters are predetermined in the embryo. Unlike other crops, corn embryo is quite prominent in one of the kernel flat sides. Thus, by sowing kernels in a regular manner, both shoot canopy above ground and root direction and distribution in the soil can be manoeuvred. Further, planting of kernel with their proximal end down results in greater vertical penetration of primary and secondary roots, the most desirable characteristics of emerging seedlings under dryland farming. Pattern and Van Doren (1969) reported that the kernels planted with their proximal end down resulted in greater root length and 300% greater root penetration (at 5-leaf stage) than when planted with proximal end upward. In usual plantings, the kernel falls randomly and hence the root and shoot orientation becomes random.

Orientation of kernel with proximal end down and flat plane along drill-row results in leaf orientation in the inter-row spaces, a character required for better solar energy utilization; less mutual leaf shading, and efficient biological water harvesting and root orientation along drill row, a character required for minimal damage to roots in interculture and weed control operations. Further, on the contrary leaf orientation along the drill row may be conducive for intercorporating practices.

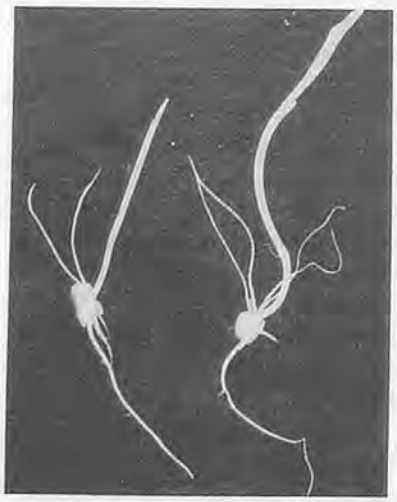

Fig. 1 Upward orientation of secondary roots of corn germinated on moist filter paper.

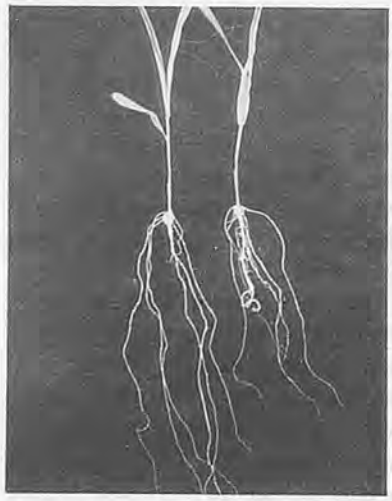

Fig. 2 Downward orientation of secondary roots of corn grown in vermiculite.

Table 2 Orientation of Secondary Roots on Corn (*Zea mays* L.) cv. TZB seedlings Grown in Vermiculite

	No. of secondary roots	
	In the kernel flat plane	Across the flat plane
Experiment I	2.70±0.03	153±0.03
Experiment II	2.48±0.02	163±0.01

The precision planting of kernels can be accomplished manually on small scale, or by fixing seeds on a tape and planting it mechanically on a large scale. A suitably designed planter is required to bring this effect that would mean application of non-monetary unit in corn cultivation.

REFERENCES

Pattern, G.P. and Vaneren, Jr D.M. (1969) Effect of seed orientation on emergence and growth of corn. Agron. Abstr. Amer. Soc. Agron., Madison. P. 44.

Peper G.E. (1975) The effect of leaf orientation and plant density on the yield of maize (Zea mays L.) 1 Diss. Abstr. Int. B. 35 (II) 5234 B.

Peters D.B. and Wolley J.T. (1959) Orientation corn planting saves moisture. Crops and Soil II (8). (8) 28.

Prine G.M. (1973) Grain yield of maize as affected by kernel orientation and population, Soil and Crop Sci. Soc., Florida 32: 4-6.

Prine G.M. (1977). Plant population, row width, and kernel orientation effect on grain yield of early and medium maturing corn Proc. Soil and Crop Sci. Soc., Florida 36: 157-60.

Yadav, R.C. Vijay Kumar and Ogunlela, V.B. 1983. Biological water harvesting: A method to endure period of droughts, J. Arid Environ. 6: 15-17. ■■

Drainage Problems in Al Hasa, Saudi Arabia

by
A.H. Abdoun
Syrian Arab Republic
Technical Assistance to Agric.
Investment in the Southern Region
Farm Machinery and Mechanics Training Center
Daraa, Syria

Introduction

Land development in developed countries is greatly influenced by the presence or absence of irrigation and drainage facilities.

The present study examines the problems on drainage in Al Hasa, Saudi Arabia. In this area, irrigation has existed since decades back and prolonged irrigation must have resulted in harmful levels of salt sedimentation. Proper drainage was thus seen as most practical in removing excess water from fields.

Saudi Arabia's total land area is about 2.2 million km^2. About a third of this area is affected by sedimentation due to irrigation. Al Hasa lies in the eastern region of the country and forms an oasis in the arid zone. It is comprised of one of the largest irrigated schemes in the surrounding eastern deserts. Geologically, it is characterized by what is called the Neogene Stratum which is rich with underground water, the main source for irrigation water.

Al Hasa's total area is about 20 000 ha of which 11 000 ha are irrigated. The flow of water is continuous in the springs and pumped from the wells. The temperature of water from these sources ranges between 35 – 40°C. The irrigated land is estimated to consume about 230 million m^3 of water in summer, while in winter the consumption becomes remarkably reduced to about 100 million m^3. In most of the areas the salinity rate of waters is found to be between 1200 –1500 ppm.

Gravity irrigation water is distributed through canals and tributaries which are concrete. Thus, about 80% of the total area is under gravity direct flow and only 20% is through pumps. The number of main canals that drain the water off the scheme is calculated to be about 16, giving a stretch of 160 km. There are 233 tributaries which add up in length a total of about 265 km. Moreover, 950 branches exist in the scheme to form a total length of about 1075 km.

During irrigation times, the surface run – off carries variable amounts of sediment into drainage canals. The movement of eroded sediment stops to settle salts due to the effect of high temperatures.

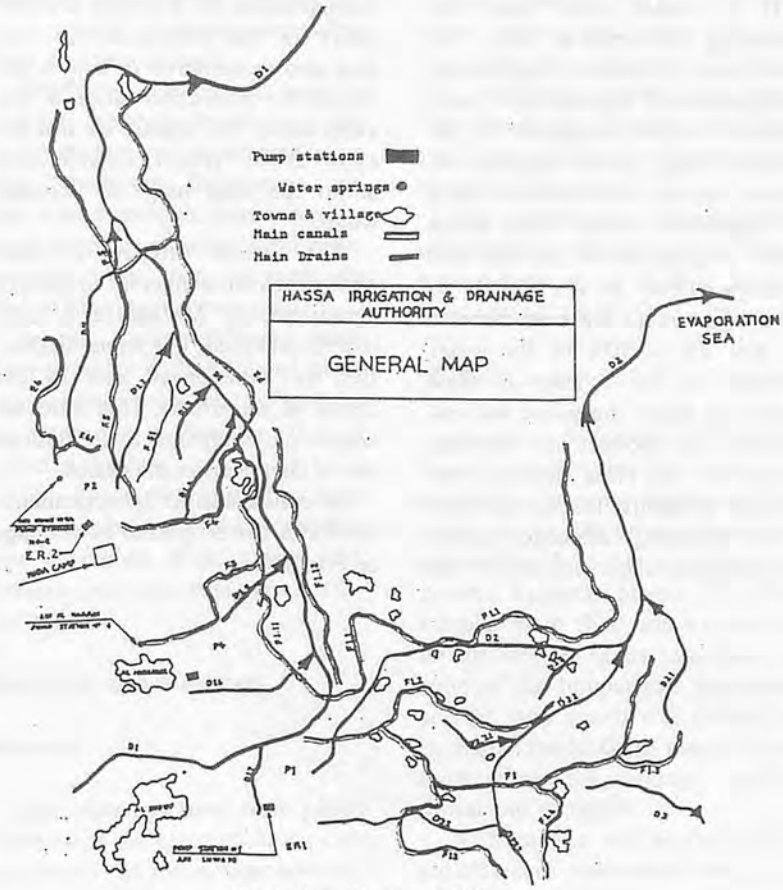

Fig. 1 General map of Al Hasa.

Drainage Situation

In Al Hasa there are about 15 main open drains with a total length of about 145 km and 135 tributaries that measure in total length 138 km. It is estimated that 1240 branch drains exist in the scheme which are dug at distances of 120–150 m from each other. They collect drainage water from the open field ditches, giving a total length of about 684 km.

Depending on the gradient of these drains which affect the sediment settlement, there are some factors to consider. As the energy to erode and the capacity of transporting the dissolved salts decrease, the deposition is increased in such climatic conditions of the area.

Some Problems of Drainage

It is rather clear from the preceding information that the total length of drains is huge, hence the problem of drainage is of great concern to the authorities of the scheme. Large water supplies are wasted as this water settles down in depressed areas. This forms water logging which affects soil fertility. Thus it is leading to salinity factor. It had been estimated that 25 – 30% of the water available in the scheme is most needed to leach the saline soil and improve its productivity through drains. In Al Hasa scheme, the problem of salinity is still unsolved.

The existing drainage system harbors undesirable weeds that can survive salinity. These weeds have become difficult to eradicate. The use of weedicides is harmful to the crops of the region.

In some farms, it is quite difficult to construct proper drains due to the small sizes of individual holdings. Such cases will not permit the loss of more lands for the purpose of drains.

Measures Taken

The scheme management is keen to solve the problems of drainage in order to reduce further damage to the soils. Salinity and waste waters were given priority for re-use through conducting many experiments on the suitability of such waters for different crops varieties. Trials on crops that are resistant to salinity whether in water or in soil, were made in different areas. Reconsideration of watering management for the betterment of cropping and reclamation of land is put ahead for execution since a few years back. The results are not yet clear as to reflect reliable idea about the ideal usage of drainage water.

The second problem is weed control which is inherent in salinity measurements. Mechanical control is well practised, but some difficulties are experienced due to the depth of the drains. This is not an acute one, compared to continuous use of chemicals in the drains.

In conclusion, it is recommended that a better system of drainage be established.

Fig. 2 Main drain maintenance.

Fig. 3 Waterman opening sluice.

Fig. 4 One of the watersprings.

REFERENCES

Mel Hagood, Oman Irrigation Problems, unique yet common too. Arab Water World. Vol. 2 No. 10, 1978.

M.J. Brown et al, Ponding Surface Drainage Water for Sediment and Phosphorus Removal. Transaction of A.E. Vol. 24 No. 6, 1981.

A.B. Bottcher, Nutrients and Sediment Loading from a Surface Drainage System. Transaction of A.E. Vol. 24. No. 5, 1981. ■■

Rice Drying, Husking and Milling

—Part II Husking—

by
Suleiman Juma Omar
Research Student
Faculty of Agriculture
Kyoto University
Kyoto, Japan

Ritsuya Yamashita
Professor
Faculty of Agriculture
Kyoto University
Kyoto, Japan

Introduction

Husking is performed in order to remove paddy husks. In the process of husking, the action of tension, compression and friction are applied. With all those forces, the idea is focused on getting brown rice without breaking the grain or if possible without damaging the bran layer (1).

Because of the structure of the paddy grain, there is some percentage of broken rice which cannot be avoided, but efforts have to be made to avoid or at least minimize this percentage. If the paddy cracks during husking or in the field due to sun cracking or other reasons, then brokens in husking cannot be avoided (1).

The condition under which paddy can resist maximum compressive strength is when the paddy grain has the moisture content of between 14-16% wet basis (2).

In husking, there are many types of machines which can be used. According to make and design, different machines have different husking methods. At present, the Japanese Satake rubber roll husker has become very famous (1). In using this type of machine, like the disc sheller type, the grain's thickness and the machine's clearance between the rolls or between the discs through which the paddy is husked, must have a certain ratio relation so as to perform the husking well and with less damage or brokens, which is the main aim (1).

If the paddy is husked using the impeller type machine then, the clearance problem does not arise. The most important aspect is the amount of head brown rice recovered or amount of broken rice as loss from various machines.

Whichever machine is used in husking, the most important point is to have less broken rice and more head brown rice. Experience, and after a long research, shows that the short Japonica varieties yield broken rice of less than 1% with any type of husking machine used.

In this study, different long-grain varieties with different moisture contents were husked in order to determine a possible way of reducing this loss.

Two types of husking machines were used, rubber rolll and impeller type machines. With rubber roll, different roll clearances were used.

Materials and Methods

Materials

The materials used were paddy varieties of different moisture content levels. The rice varieties were IR-8 of 12%, 14% and 16% moisture content; and Blue bonnet of 15% moisture content, wet basis. Unheated forced air of 30°C was used to regulate the moisture content of IR-8 and ordinary room temperature air was used to regulate moisture content of the Blue bonnet. These two varieties were husked by rubber roll machine. The other samples used were IR-8 and IR-36 of 14%, 16%, 18%, 20% and 22% moisture content, wet basis. The forced air of about 30°C was used also to regulate the moisture content of samples.

The samples were then winnowed to remove the impurities. These two varieties were husked by impeller type machine.

Methods

Rubber rolll husking – The rubber roll husking machine was connected to the power source and the power metre. The power was switched on first in order to record the no-load stabilized power. The 500 g samples were then one by one fed to the hopper of the machine. As soon as the hopper gate was opened, the stop watch was started on to mark the husking time. At the same time the average husking power was recorded.

With rubber roll husker, different clearance ratios were used, 0.15, 0.25, 0.35 and 0.5 for each variety

and of each moisture content.

Clearance ratio is defined as the clearance between the rubber rolls divided by the average thickness of the paddy grains sample to be husked (6).

The IR-8 variety had an average thickness of about 2.0 mm while the Blue bonnet had an average thickness of 1.8 mm. Two roll speed ratios of 0.45 (A) and 0.21 (B) were used.

Impeller husking – The machine was also fixed to the power source and the power metre. The power was switched on first in order to record the no load stabilized power.

The 500 g samples were one by one fed to the hopper of the machine. As the hopper gate of the machine was opened, simultaneously, the stop watch was started on to mark the husking time. The average husking power was also recorded.

Separation

Unhusked paddy – Since the husked samples contained unhusked paddy and broken rice, they had to be separated. Separation was done by using an indent separator. Separation of long-grain unhusked paddy used the indent number Us 6.0 at a rotating speed of 26 rpm for 1 min. The indent hopper was set at an angle of 10 degrees (6). This separation time was enough for IR-8 variety but was not enough for Blue bonnet variety, as the grains were a bit longer than those of IR-8, and could not fit well into the indents. In this case, about 5 min were used for the Blue bonnet and 10 min for the IR-36 separation.

Usually, Japonica varieties use Us 5.5 indent for 1 min at 26 rpm for unhusked paddy separation (6).

Broken rice – For the separation of broken rice, the same indent machine was used but this time with indent number Us 4.5 (6). The indent number Us 3.5 was used for the Japonica varieties (6).

The indent cylinder speed was the same, that is, 26 rpm for 1 min, but the indent hopper was set at an angle of 25 degrees instead of 20 degrees for Japonica. With long grain, at 20 degrees angle indent setting, some of the head brown rice were entering the hopper.

The unhusked paddy, broken rice and husked brown rice were wieghed and the power consumption and other parameters were calculated.

Results and Discussion

Rubber Roll Husking

Husking ratio – The results in Fig. 1 show the effect of moisture content to husking ratio. In all the clearances and speed ratios, the husking ratio for 12% moisture content samples was higher and that for 16% moisture content was lower. The 16% moisture content samples, in some cases, gave a husking ratio of lower than 80%. This shows that the higher the sample's moisture content is, the lower the husking ratio becomes. The husking ratio of about 80% is considered ideal.

In Fig. 2, the effect of roll speed ratio to husking ratio is clearly visible. In general, the husking ratio increased with speed ratio A (0.45) but with clearance ratio of 0.5, the husking ratio decreased in speed ratio A except for 14% moisture content, which showed almost the same level even as it was above 80%. With the same clearance ratio, the husking ratio of 16% moisture content sample was below 80% which is not desirable.

Fig. 3 shows the effect of speed ratios A and B to husking ratio. The smaller the clearnace ratio is, the higher the husking ratio becomes.

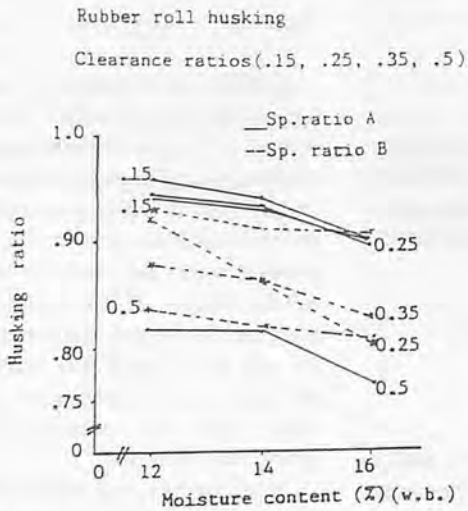

Fig 1 Effect of moisture content on husking ratio (IR-8).

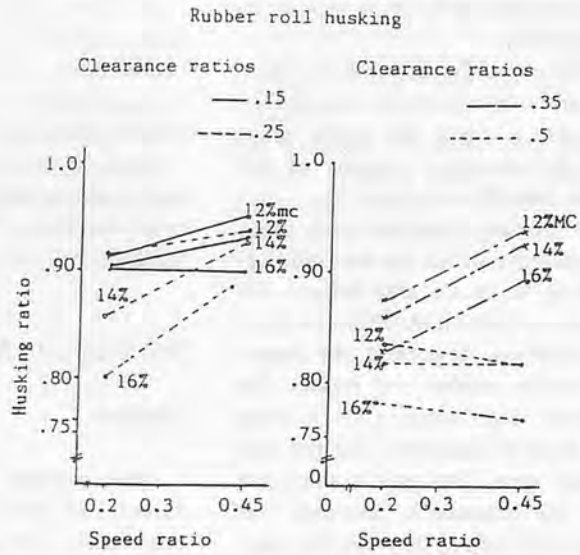

Fig. 2 Effect of speed ratio to husking ratio (IR-8).

With the Blue bonnet variety, there was a slight increase of husking ratio in speed ratio A in all the clearance ratios.

Broken rice ratio – The relation of husking ratio to broken rice ratio is shown in the Fig. 4. IR-8, with speed ratio A the broken rice ratio increased as the husking ratio increased. With the Blue bonnet, the broken rice ratio also increased as the husking ratio increased in both speed ratios. The Nihonbare variety however, did not show any significant change in broken rice ratio on increase of husking ratio.

Husking efficiency – Husking efficiency is defined as the husked brown rice divided by the product of average husking power and husking time.

Fig. 5 shows the effect of clearance ratio and speed ratio to husking efficiency. In general, the husking efficiency increased as the clearance increased. At clearance ratio of 0.5 in both speed ratios and with both varieties, the husking efficiency was highest. With speed ratio 0.21 (B), the efficiency was higher than that of speed ratio 0.45 (A). The two varieties gave different magnitude of results. The IR-8 variety had higher efficiency than that of Blue bonnet variety.

Impeller Husking

Husking ratio – In Fig. 6, the result on effect of moisture content to husking ratio is shown. The husking ratio decreased as the sample's moisture content increased. With the impeller husker, it is possible to perform husking even if the sample's moisture content is more than 20%, and still the husking ratio will be not less than 80%.

The results can also show that the husking ratio of IR-8 was more than that of IR-36 but that of Nihonbare and Koshihikari were the highest. At 22% moisture content, Japonica varieties were at 95% husking ratio. The two Japonica varieties did not have much difference in husking ratios.

Broken rice ratio – Fig. 7 presents the results on effect of husking ratio and variety to broken rice ratio. With the impeller husker it shows that the broken rice ratio de-

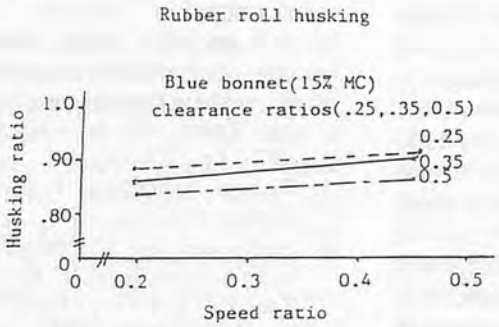

Fig. 3 Effect of speed ratio on husking ratio.

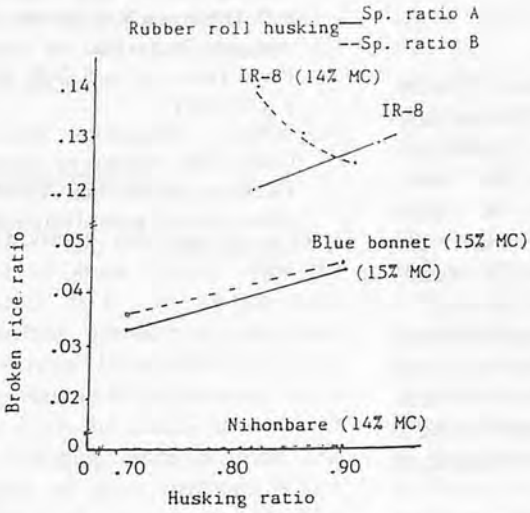

Fig. 4 Relation of husking ratio and broken rice ratio.

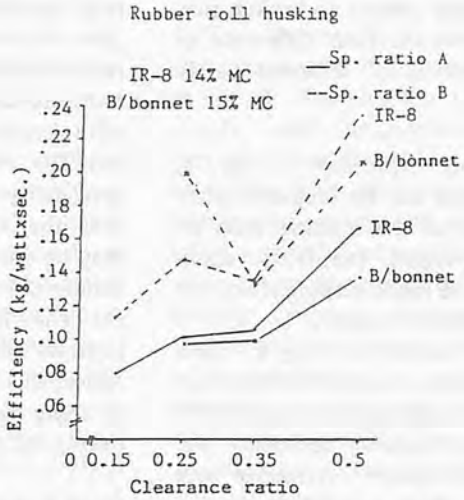

Fig. 5 Effect of clearance ratio on husking efficiency.

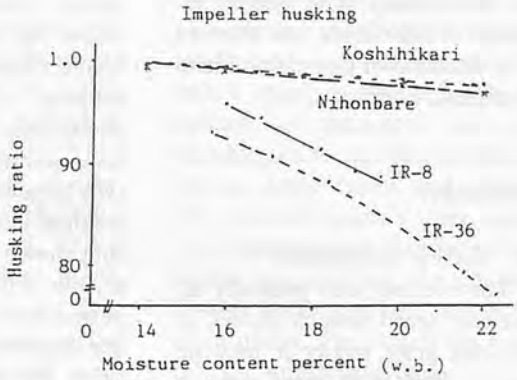

Fig. 6 Effect of moisture content on husking ratio.

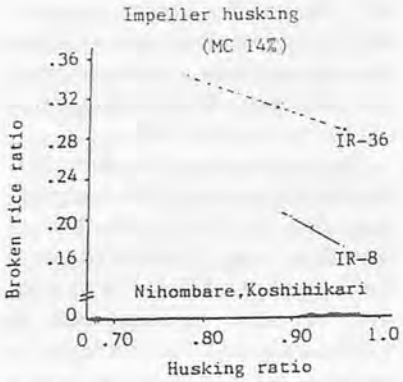

Fig. 7 Broken rice ratio and husking ratio.

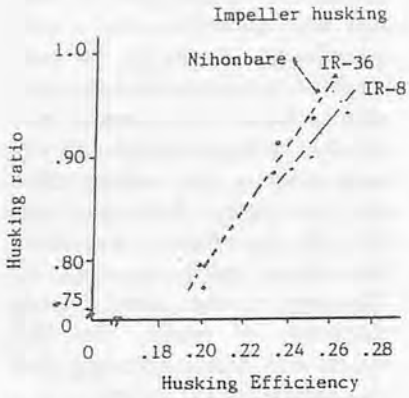

Fig. 8 Effect of husking ratio on husking efficiency.

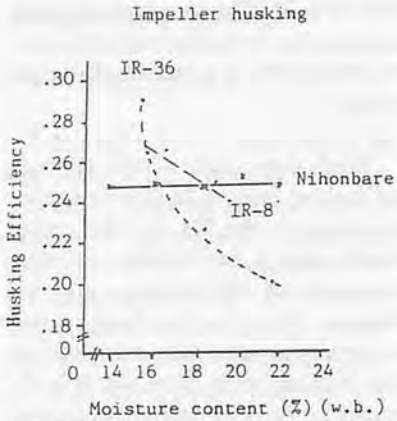

Fig. 9 Effect of moisture content on husking efficiency.

creased as the husking ratio increased.

The IR-36 variety gave much higher broken rice ratio than that produced by IR-8 variety. Japonica varieties, Nihonbare and Koshihikari, gave almost no broken rice. This shows the clear difference of characteristics of different paddy varieties.

Husking efficiency – Fig. 8, shows that the husking efficiency increased as the husking ratio increased. Again, the IR-8 variety gave a little more husking efficiency than the IR-36 variety.

The results in Fig. 9 show the sample's moisture content affects on husking efficiency. As the moisture content decreased the husking efficiency increased in both varieties. The range of fluctuation of the efficiency can be observed more with IR-36 variety than that with IR-8 variety. The husking efficiency of Nihonbare was affected by the increase or decrease of samples' moisture content.

Conclusion

A. Rubber Roll Husker

(i) The husking ratio generally increased in speed ratio A (0.45), so with long grain paddy it may be better to husk with speed ratio A than with speed ratio B (0.21).

(ii) Clearance ratio of 0.5 resulted in more than 80% husking ratio and less broken rice ratio than any other clearance, hence this clearance is better for long grain paddy husking.

(iii) The moisture content of 14% gave a lower result of broken rice ratio with IR-8 than that of other moisture contents, hence this level of moisture is ideal for husking.

(iv) The Blue bonnet rice variety gave fairly low broken rice ratio than that of IR-8. This difference may be due to long grains of those varieties.

(v) The husking efficiency was highest with clearance ratio 0.5, hence, this clearance ratio seems to be more ideal for long grain paddy rubber roll husking.

B. Impeller Husker

(vi) The moisture content of paddy sample was the key determinant factor. Low moisture content resulted in less broken rice ratio, higher husking ratio and higher husking efficiency; when the paddy's moisture content increased, these results were quite opposite.

(vii) In general, the impeller husker resulted in more husking ratio than that shown by the rubber roll husker; but rubber roll husker brought about less broken rice ratio than the impeller husker.

(viii) The impeller husker required more initial power than that required by the rubber roll husker.

REFERENCES

1. E.V. Araullo, D.B. De Padua, RICE, Postharvest Technology-IDRC, Michael Graham: pp. 217-226.
2. S. Prasad, C.P. Gupta, Behaviour of Paddy Grains under Quasi-static Compressive Loading. Trans. of the A.S.A.E. 1973: pp. 328-330
3. Ritsuya Yamashita, Post harvesting, 1982 pp. 1-6
4. Abdisalaam Issa Khatibu, Postharvest requirements for the Zanzibar rice crop, FAO Project No. URT/73/024: pp. 1-40.
5. Ashfaq Husain, K.K. Agrawal, T.P. Ojha and N.G. Bhole: Viscoelastic Behaviour of Rough Rice Trans. of A.S.A.E. 1971 p.p. 313-315.
6. Ritsuya Yamashita and K. Goto, The Study of Drying, Husking and Milling characteristics of rice grain (unpublished) pp. 9-31. ■■

Development of an Axial-Flow Thresher with Multi-Crop Potential

by
O.P. Singhal
Senior Scientist
Division of Agric. Engg.
I.A.R.I.
New Delhi-110012, India

G.E. Thierstein
Associate Professor
Dept. of Agril. Engg.
Kansas State University
2115 R. Street, Belleville
Kansas 66935, U.S.A.

Abstract

Commonly available wheat threshers in India are not suitable for handling a wide range of crops grown by the farmers, particularly moisture crops. An IRRI axial-flow thresher, a better design, capable of threshing freshly harvested paddy was selected, modified and evaluated as a multi-crop thresher for a wide range of crops, namely; sorghum, millet, chickpea, pigeonpea, wheat and paddy at ICRISAT Centre in India and in villages. A threshing efficiency of more than 95% and grain output of 500-800 kg/ha, were obtained for most of the crops. This thresher could be recommended for village adoption based on its performance and other features.

Introduction

Threshing involves the detachment of grain kernels from the panicles. It is one of the most important post-harvest operations for cereals. Hand-beating and bullock-treading of the harvested crops have been the traditional methods for threshing crops in India. The output of these methods is low leading to delays in handling a large volume of produce and consequent losses, while the cost of operation is high (Singh and Joshi, 1979). Power threshers have become popular in India to overcome these difficulties. The present population of the threshers in the country is estimated to be over 500 000 with an annual production of approximately 50 000 units (Verma, et al, 1978).

Commonly available wheat threshers are designed primarily on hammer mill principles and are designed to produce chopped straw (Bhusa) along with threshed grain. Farmers use this chopped wheat straw as animal feed. These threshers are not suitable for handling other crops like paddy, maize, sorghum and pulses. For these crops farmers prefer not to chop the straw. The energy required for these threshers is very high: ranging from 20 to 50 kWh/ton (Pathak, et al, 1978).

The HYV short duration sorghum and pearl millet grown as major cereal crops in the semi-arid tropics of India, if planted in June, are harvested in the last week of August or first week of September, months of high probability of rainfall (Virmani et al, 1978). These crops are difficult to thresh at high moisture content by conventional threshers available in the country. A suitable thresher is required to thresh these crops to avoid losses from rotting and other causes.

Threshing Mechanisms

The important threshing mechanisms used in threshers are given in **Fig. 1**. The simplest and most widely used arrangement is a threshing cylinder with wire loops on its periphery and no concave (a). The grains are combed out easily while a handful of material is held against the wire loops of the revolving cylinder. It is generally used in pedal operated threshers.

A hammer-mill or beater type threshing cylinder (b) is used in wheat threshers. The hammers are mounted on a shaft rotating inside a closed housing or drum. The crop becomes sufficiently small in size to pass through the concave placed at the bottom of the housing.

A similar threshing arrangement (c) is used in syndicator threshers which uses a serrated flywheel instead of hammers for grain threshing. The flywheel rotates inside a closed casing and concave. The material makes a three quarter turn during which threshing occurs before encountering the chopping knives which cut the straw into small pieces. The crop is fed axially into the threshing cylinder.

The rasp bar (d) and the angle

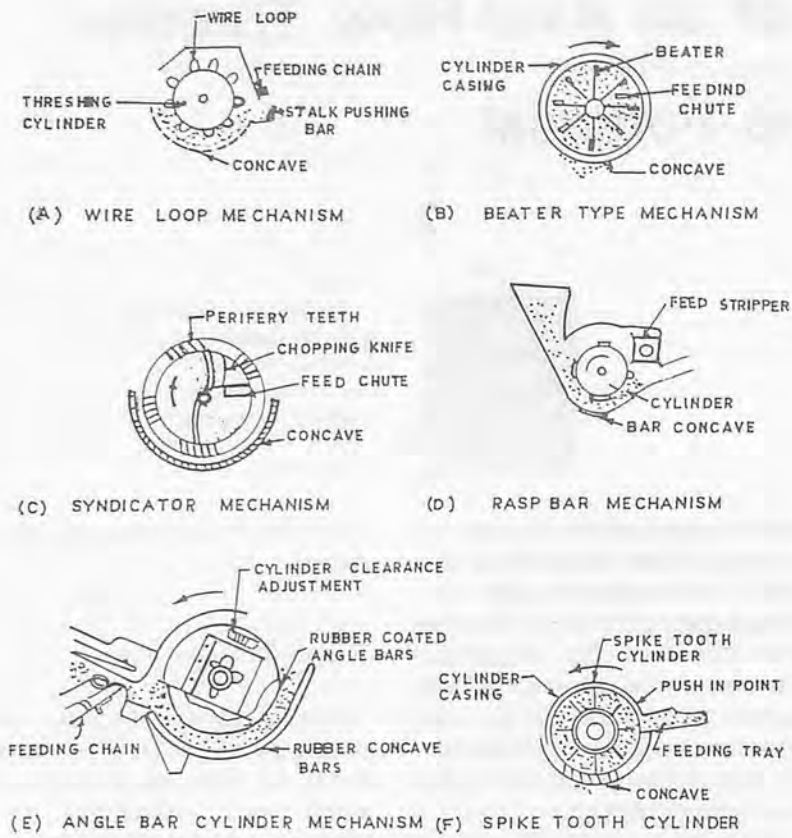

Fig. 1 Different types of threshing mechanism.

bar (e) cylinder type threshing arrangements are quite common (Bainer et al, 1960). The axial flow threshing arrangement (f) has been developed at IRRI, Philippines and is quite successful for paddy threshing (Araullo at al, 1976). Sometimes a rubber roll threshing mechanism is also used for threshing podded crops like beans. Those rolls seperate the grain by squeezing action, rubbing action or a combination of the two.

Criteria for Thresher Selection

Multicrop Potential

Mechanical threshing of wheat crop is widely accepted whereas threshing of paddy and other crops is still usually done manually. With the introduction of high yielding varieties, fertilizers, improved equipment and better farm practices, multiple cropping is becoming popular (Joshi, et al, 1980). Since most Indian farmers have a land holding of less than 5 ha, a low cost, light-weight thresher with few moving parts and with a multi-crop potential is preferred by the farmers (Pathak, et al, 1978).

Performance

Where multiple cropping is practised, it is often necessary to harvest the crop at or soon after physiological maturity so that adequate time is available for timely sowing of the next crop. A good thresher must be able to thresh high-moisture crops efficiently (minimum threshing efficiency of 95%) with minimal separation losses. The threshed grain should be clean and with the least amount of broken grains.

Operation Safety

A survey of thresher accidents conducted by Verma, et al (1978) during the wheat threshing season of 1976 reveals that with a thresher population of 150 000 in the state of Punjab, as many as 294 persons were injured while working on power threshers. The percentage of accidents for various types of threshers is given in **Table 1** (Verma, 1978). The number of accidents in the Punjab increased to 391 in 1978 and 396 in 1979 (Agricultural Engineering Today, July-August, 1980). Similarly the figures for the state of Haryana are 280 in 1977, 281 in 1978 and 127 in 1979. It has been reported that about 1 200 persons are being incapacitated by the use of poorly designed threshers every year in India. Most of the victims are the poor labourers hired for this job.

Similar data are also available for other parts of the country. It has also been reported that threshers with rasp-bar and spike-tooth cylinders primarily designed for paddy threshing are quite safe in operation but these threshers need several modifications for threshing other cereals and pulse crops efficiently.

Threshing Characteristics of Crops

The threshing performance depends upon the type of crop, variety, moisture content and threshing arrangement. The paddy is easy to thresh. Trials conducted at ICRISAT on different threshers available from India and abroad, it was observed that certain sorghum geno-types and millets are very

Table 1 Thresher Accidents for Various Types of Threshers.

Type	Percentage of accidents
Drummy	45.16
Syndicator type	37.42
Hammer mill type	14.19
Rasp bar	1.94
Spike tooth	1.29

Source: Verma, 1978.

difficult to thresh at a moisture content higher than 15% which is most common at the time of harvesting rainy season crops. When these crops are threshed at high moisture levels, the result is that a considerable amount of seeds retain their glumes (5 to 15%) reducing the market price considerably (20 to 25%) (ICRISAT Annual Report, 1978-79). The pulse crops are quite delicate to thresh and results in higher percentage of brokens with little harsh threshing arrangement.

Labour Requirements

If harvesting, threshing and cleaning are done by human labour, the operations require a large number of man-hours. **Table 2** gives the labor and the power requirements for paddy threshing and cleaning operations done on small farms using various methods. The table shows that about 150 man-h/ha and 100 man-h/ha are the labour requirements for threshing and cleaning by manual labor assuming a crop yield of 4 000 kg/ha for paddy crop. While only 20 man-h/ha are required for threshing and cleaning operation using a 6 kW mechanical thresher (Araullo et al, 1976). Walker and Khirsagar (1981) also estimate that the labour requirement is considerably less for mechanical threshing than manual threshing.

Considering the above facts, a suitable multicrop thresher is required to meet the following requirements: Performance – Capable of threshing a wide range of crops; Design – Simple, can be locally fabricated in small scale manufacturing plants and operationally safe; Capacity – Approx. 400-600 kg/h of wheat grain; Power – 10 kW-h/ton; Weight – less than 200 kg; Labour – 4-6 man-labours to operate the thresher; Cost – About Rs.8 000 with prime mover.

Brief Description of Threshers

The following threshers with multicrop potential were selected for evaluation on threshing of paddy, sorghum, millets, chickpea and pigeonpea: 1) IRRI portable thresher without cleaning attachments and using 3 kW petrol engine. 2) Rasp-bar type Alvan Blanch midget thresher without cleaning attachment with 2.25 kW petrol engine. 3) IRRI axial flow thresher with cleaning attachments and using 7.5 kW petrol engine.

Table 2 Labor and Power Requirements for Paddy Threshing and Cleaning Operations

Operation	Labor requirement (man-h/ha)	Mechanical power requirement (kW)
Threshing		
(A) Manual		
Threshing with hand sticks	150	
Pedal thresher	300-400	
Treading with bullocks (2 men, 2 bullocks)	3*	
(B) Mechanical		
Treading with standard tractor	80	30-50
IARI axial flow portable thresher	54	3
IRRI axial flow thresher	20	6
Cleaning		
(A) Manual		
Winnowing basket	100	
Hand operated winnower	30-75	
(B) Mechanical		
Seed cleaner	24-28	0.5-1

*Capacity (days/ha)

Source: Araulle, et al. 1976.

Fig. 2 IRRI portable thresher.

IRRI Portable Thresher

The thresher was designed to satisfy the need of a small farmer and was low-cost thresher that could be carried into the field. The thresher (**Fig. 2**) consisted of a metal frame, a peg-tooth cylinder with four straw throwing paddles on one end, semi-circular cover with four spiral louvers, and a round bar lower concave. A folding feeding tray, removable handle bars for transport and complete with a 3 kW petrol engine.

The thresher operates on the axial-flow principle. The material is fed at one end of the cylinder and is discharged through the other end. The pegs on the threshing cylinder hit the material, separating the grain from the straw and at the same time accelerating them around the cylinder. The bulk of the grain is threshed during the initial impact. Further threshing is performed while the material moves axially until the straw is discharged by the straw paddles at the discharge end. The original design provided by IRRI was suitable for threshing paddy but this thresher could not be used to thresh sorghum and millet. The thresher has no provision to change threshing cylinder concave.

Axial-Flow Thresher

This model evolved as a result of operational and cleaning problems encountered in an earlier design of the portable thresher (**Fig. 3**).

The thresher consisted of the threshing, cleaning and conveying sections. The threshing section was similar to the earlier design but with an open peg-tooth cylinder. The cover was semi-hexagonal to assist in the separation of the threshed grain from the straw by interrupting its smooth circular motion. This action stirs the straw to improve separation efficiency. The concave is of a semi-circular shape made from round-bars and fixed in position.

The cleaning system consists of upper and lower oscillating screens and twin centrifugal blowers between the screens which provides air movement to clean light-weight material from the grain as it dropped from the upper screen. The screenes moved in opposite directions at the frequency of 340 oscillations/min and stroke length of 32 mm providing a quiet and balanced operation. The upper and lower screens are replaceable to suit various cleaning conditions and seed sizes. At the normal blower speed of 750 rpm, the average air velocity at the discharge duct was 427 m/min with the air control shutters fully opened and 323 m/min in the closed position. This range of air velocities was found sufficient to clean threshed paddy under a wide range of threshing conditions but not adequate for pearl millet and sorghum. The clean grain was conveyed to the left side of the thresher by an auger mounted under the lower speeds of the oscillating sieve. The thresher has no provision to change the speed of cylinder, fan and oscillating sieves but was modified to change the speeds of these components.

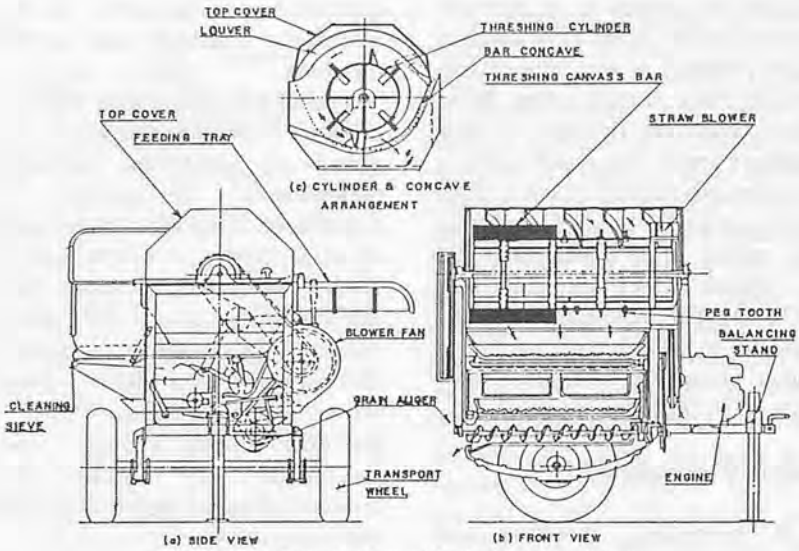

Fig. 3 Axial-flow thresher with cleaning attachment.

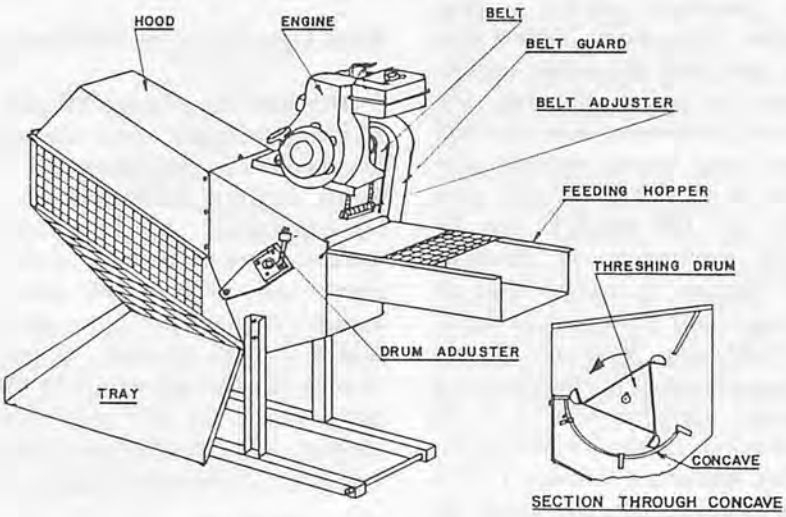

Fig. 4 Alvan-Blanch Midget thresher.

Alvan Blanch Midget Thresher

The thresher (**Fig. 4**) is very simple in design. It consisted of a 30 cm wide triangular section threshing drum with three rasp bars at 120 mm spacing and a fixed bar concave. The clearance between the drum and concave was adjustable by sliding the drum shaft bearings vertically and by spacers in the bearing mountings which displaced it horizontally.

The thresher has no provision for cleaning and separation of grains from chaff, consequently the output was mixed with chaff. A stationary straw rack was provided to separate the straw and with additional cleaning, it worked satisfactorily for paddy and sorghum threshing but was not suitable for millets, groundnut and maize.

It was a small thresher using a 2.25 kW power unit for its operation. The thresher was safe in operation. Three persons were required to operate it (two for feeding the earheads and one for collecting the threshed material).

LCT Thresher

This thresher (**Fig. 5**) is claimed suitable for threshing sorghum crop. The manufacturer agreed to put the thresher for testing on a wide range of crops.

The thresher consists of a rasp bar type open cylinder and a standard wire concave. The material, after threshing, passed to the

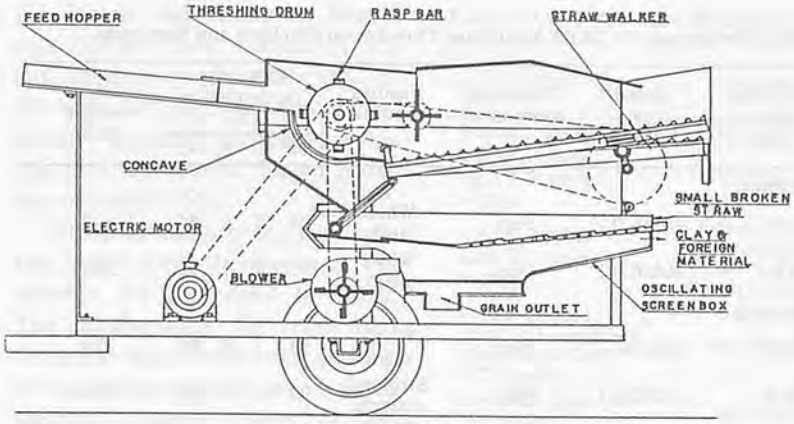

Fig. 5 LCT thresher.

straw walker and oscillating cleaning sieve. A 15 kW petrol engine was used to operate the thresher for cleaning operation.

Experimental Technique

The threshing tests were performed according to a standard method suggested by IRRI (Test Procedure T-1, Issue No.1 May 25, 1978) and the Indian Standard Institute test code for stationary threshers for wheat (IS 6284, 1975). The thresher performance was measured in terms of grain output per hour, threshing efficiency, broken grain percentage (external and internal damage), separation losses, quantity of blown grain alone with the straw, cleaning efficiency and power requirements.

The threshing effectiveness was measured against peripheral speed of the cylinder, cylinder-concave clearance, crop variation in terms of moisture content and maturity and feeding rate. The optimum conditions for thresher evaluation was set for threshing efficiency and cleaning efficiency being 95%, separation losses not exceeding 2% and the seeds with glumes not exceeding 5%. The grain containing glumes after having passed through the thresher was considered unthreshed.

Three samples of 10 kg each of sorghum earheads from each crop were threshed by a particular thresher. Threshing time, amount of grain collected at the grain outlet and the amount of grain in the straw were measured for calculating threshed grain output per hour and the blown grain losses. Three samples from each outlet were drawn for analysis to calculate the threshing efficiency, per cent glumes, per cent brokens, cleaning efficiency and moisture content at the time of threshing. The grain moisture was determined by a Burrow's moisture digital computer. Some of these measurements like cleaning efficiency could not be done with the Alvan Blanch thresher since it has no cleaning mechanism.

The energy consumed during threshing was measured by an energy meter; operating the thresher at no load for 15 min and then on the load using a 50-kg sample each time.

The gran straw ratio was determined by selecting three samples of crop from the material to be threshed. Each sample weighed about 5 kg. The weights of the grain and straw were determined separately for each sample and their ratio was calculated.

Results and Discussion

Comparative Performance of Threshers

Threshers with multicrop potential, relatively low labour requirements and probabilities of low accidents were evaluated for their comparative threshing performance, under optimum operating conditions and is given in **Table 3**.

The axial-flow paddy thresher with cleaning attachment developed by IRRI for paddy threshing was selected for modifications and evaluation.

Performance of Axial-Flow Thresher

The axial flow thresher with cleaning attachment was evaluated in four steps.

Table 3 Performance of Four Different Threshers for Threshing Sorghum and Millet under Optimum Operating Conditions

Thresher	Threshing efficiency %	Brokens %	Separation loss %	Cleaning efficiency %	Grain output (kg/ha)	Energy required kWh/t
			Sorghum (CSH 6)			
IRRI axial-flow (portable)	82	0.3	5.0	–	210	16
IRRI Axial-flow	89	0.7	4.6	92	740	10
Alvan Blanch Midget	82	0.4	–	–	73	30
LCT	98	5.5	–	96	1000	15
			Millet (BJ 104)			
IRRI axial-flow (portable)	76	0.2	12.1	–	176	18
IRRI Axial-flow	80	0.6	3.5	86	480	16
Alvan Blanch midget	62	0.2	8.1	–	80	30
LCT	80	2.0	–	63	600	20

Grain moisture: 10 to 12%.

1. Initial attempts to thresh paddy, sorghum, millet, chickpea and pigeonpea without any modifications in the thresher (open cylinder with pegs as original machine received from IRRI).
2. Modifications in the thresher components for threshing sorghum crops.
3. Threshing several crops with the modified thresher to evaluate the threshing performance of this thresher.
4. Field testing of modified thresher in the farmers' field to thresh sorghum and wheat.

Performance of original axial-flow thresher

The axial flow thresher as originally designed performed satisfactorily on IR-36 paddy. The average threshed grain capacity was about 1 000 kg/ha with only 1.5% blown grains during a continuous test period of 6 h. Practically all the grains were stripped from the panicle of the paddy stem. The cleaning efficiency was about 99%. The performance of this thresher for sorghum and millets was very poor. The threshing efficiency was about 36 % for sorghum (CSH-6) with cylinder peripheral speed of 78 m/min. The threshing efficiency for millet (BJ-104) was also very low being about 36% with grain output of about 250 kg/ha at the same cylinder speed.

The performance of the axial flow thresher was satisfactory in comparison to the other threshers under evaluation for chickpea and stripped pigeonpea pods at a moisture content of about 10%. The threshing performance for chickpea and pigeonpea is shown in **Table 4**.

Table 4 Performance of IRRI Axial-Flow Thresher on Chickpea and Pigeonpea

Moisture content %	Speed rpm (m/min)	Threshing component	Feeding method	Threshing performance (%)				Grain output kg/h
				TE	G	B	C	
Chickpea								
9	400(628)	Pegs	Whole plant	98	2	6	94	500
13	400(628)	Pegs	Whole plant	95	5	5	92	300
Pigeonpea								
8.4	360(565)	Pegs	Whole plant	93	7	5	90	320
8.4	380(597)	Pegs	Stripped material	92	8	4	89	380
8.4	400(628)	Pegs	Whole plant	92	8	8	81	340

* Diameter of the threshing cylinder with peg teeth – 50 cm; TE=Threshing efficiency; G=Broken grains; B=Blown grains; C=Cleaning.

Effect of Thresher's Modifications

The axial flow thresher with cleaning attachment was modified and evaluated for threshing millet and sorghum. The thresher performance was improved by making several changes on the threshing cylinder concave assembly and cleaning sieves shown in **Figs. 6 and 7**. The effects of these modifications on the sorghum threshing performance is given in **Table 5**. An arrangement of 4 rows of canvas flaps (first 2/3 of cylinder length) and 4 rows of canvas flaps (first 1/3 of cylinder length) with bar concave and wire mesh back support gave the highest threshing efficiency (88%), but separation loss was quite high (25%). While using 8 rows of canvas flaps (1/3 of cylinder length) with the above concave, the separation losses decreased to 5% without any change in threshing efficiency. The grain output for this arrangement was 780 kg of threshed grain per h. It is evident from the above results that most of the threshing occurs in the initial one-third of the cylinder length.

The threshing efficiency and output for pearl millet with the modified thresher were 80% and 480 kg/h. The amount of blown grains (separation losses) was about 3.5% which was higher than the tolerance limit of 2.0%. The energy required for threshing was 16 kg-h/t. The resulting brokens were 0.6%.

The modified axial flow thresher (4 rows of flaps in first 2/3 length and rest pegs), for sorghum threshing gave a higher percentage of blown grains (25%). The length of these canvas flaps were reduced to

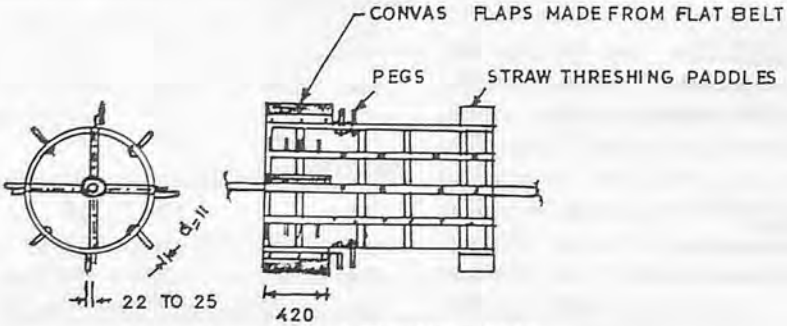

Fig. 6 Threshing cylinder.

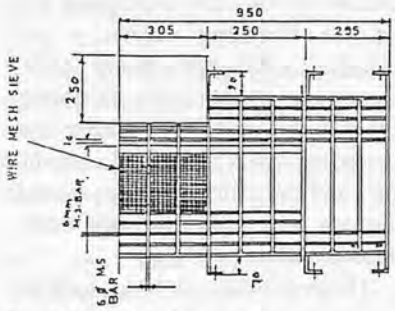

Fig. 7 Modified cleaning sieve.

1/3 length and additional length pegs (13 mm long instead of 9.5 mm original length) were used in the separation zone of the cylinder-concave assembly to minimize this loss and the rate of blown grains was reduced to 5%.

The performance of the modified axial flow thresher was not suitable for pigeonpea threshing. The performance for pigeonpea threshing was better with pegs on the threshing cylinder and with the original concave using stripped material as well as whole plants. The cylinder peripheral speed of about 600 rpm (380 rpm) was satisfactory for minimum broken grains. However, the cleaning of the threshed material at this cylinder speed was very poor due to inadequate flow of the material on the sieves. Increasing the blower speed from 700 to 900 rpm, improved cleaning. The broken grains during threshing were less than 2%. The threshed grain output at this speed was about 400 kg/h.

Table 5 Axial-Flow Thresher Modifications and their Effect on Sorghum Threshing

Cylinder	Concave	Threshing efficiency (%)	Separation loss (%)	Threshing capacity (kg/h)
Pegs full length	Original 1)	36	2.5	430
4 row of flaps (last 2/3 length) + pegs	Original	48	4.8	520
4 row of flaps (last 2/3 length) + pegs	Original with perforated sheet (6 mm dia hole for 1/3 length)	82	25.0	600
4 row of flaps (first 2/3 length)+4 rows flaps (first 1/2 length)	Modified 2)	88	25.0	640
4 row of flaps (first 2/3 length)+ pegs	Modified	87	25.0	625
4 rows of flaps (first 1/3 length) + pegs	Modified	80	5.0	725
8 rows of flaps (first 1/3 length) + pegs	Modified	87	5.0	780

1) Bar concave designed for paddy threshing at IRRI.
2) The original concave was provided with rubber strips on the upper wide along its length to increase the crop retention time. Perforated sheets with 6 mm dia holes for 1/3 length and 8 mm dia holes for the next 1/3 length were bolted to the back of the concave.
Crop: Sorghum (CSH-6). Cylinder peripheral speed: 780 m/min.

Table 6 Results of a Modified Axial-Flow Thresher with Cleaning Attachment Based on Long Term Threshing

Crop	Moisture content (%)	Threshing efficiency (%)	Cleaning efficiency (%)	Blown grains (%)	Grain output (kg/h)
Paddy (IR-8)	–	99	98	2	1 000
Sorghum (Rainy season CHS-6)	13.0	90	92	5	740
(Post rainy season CHS-8)	9.6	95	90	4	700
Millet (BJ-104)	12.0	80	86	5	400
Pigeonpea (ICP-2)	13.0	98	79	4	300
Chickpea (Local)	9.0	98	86	5	400
Wheat (Mexican)	12.0	97	90	1	300
Safflower	–	95	6	–	

Performance for a wide range of crops

The performance of suitably modified axial flow thresher is given in **Table 6** for a wide range of crops threshed at ICRISAT centre and under village evaluation (sorghum, wheat and safflower). The thresher performed satisfactorily giving threshing efficiencies above 95% for most of the crops evaluated during one pass of threshing except rainy season sorghum and millet. The thresher performance for these crops can be enhanced by further modifications in cylinder-concave arrangement to obtain less grains with glumes.

The cleaning efficiency for the pigeonpea, chickpea and millet crops was very poor (less than 90%) which was due to the lower oscillation speed of the sieves than the desired speed for an adequate material flow. While threshing millet, the lower sieve was not of the correct size.

The ratio of blown grain ranged between 1 to 6% depending on the crop. The blown grains were minimum in case of paddy and wheat (less than 2%) while for other crops these ranged from 4 to 6%.

The threshed grain output ranged between 300 to 1 000 kg/h depending on the crop. The grain output was maximum for paddy (1 000 kg/h) while it was minimum for wheat and pigeonpea (300 kg/h). The optimum operating conditions based on long term threshing are given in **Table 7**.

Testing of Modified Axial-Flow Thresher in Villages

After appropriate modifications and intensive testing at ICRISAT Centre, the modified axial flow thresher (**Fig. 8**) was evaluated in villages primarily to note the farmers' response. This thresher was

Table 7 Optimum Operating Conditions for Threshing a Wide Range of Crops

Crop and variety	Optimum moisture content range (%)	Threshing cylinder configuration	Concave configuration	Cylinder speed range rpm	Cylinder concave clearance (mm)	Fan speed (rpm)	Sieve size I (mm)	Sieve size II (mm)	Speed of sieves (Osc/min)
Paddy (IR-8)	13-20	Pegs	Welded m.s. rod	705-780	12	750	8	6	340
Sorghum (CSH-6)	10-12	Convas flaps (first 1/3 + pegs)	Modified (wiremesh in first 2/3)	780-860	6	800	6	4	340
Millet (BJ-104)	10-12	Convas flaps (first 1/3+pegs)	Modified (siremesh in first 2/3)	780-860	6	800	6	2	360
Pigeonpea (ICP-2)	9-12	Pegs	As for paddy	630	8	900	6	4	400
Chickpea (local)	9-11	Convas flaps with straw choppers in the threshing zone. Extra thick pegs	Modified (wire mesh in the complete concave)	780-940	6	800	6	4	340

Thresher: Axial flow thresher

evaluated for sorghum and wheat. The thresher was very much preferred over existing local threshers by farmers due to its low labour requirement and ease in feeding earheads along with its better performance for sorghum threshing than the existing beater type local threshers in villages. The thresher was operated for about 3 days under different operating conditions in a conventional village of India. The four different varieties of sorghum threshed were; two ICRISAT hybrids (GG-1483) and (GG-1485), a very common local variety Maladandi (irrigated and non-irrigated) and a hybrid released by the Indian Government (CSH-8).

After minor adjustments, the same thresher was evaluated with wheat in another village. The thresher was tested with Mexican, U.P.301 and U.P.310 varieties of wheat.

Fig. 8 Performance evaluation of modified thresher on sorghum.

Performance of Thresher for Sorghum and Wheat Threshing

The thresher gave 98% threshed grains in one pass with an output of about 700 kg/h for ICRISAT hybrid sorghum. With Maladandi and CSH-8 varieties, the threshing efficiency and threshed grain output, were about 95% and 600 kg/h during one pass of threshing. CSH-8 was difficult to thresh, as the grain tended to separate from the earheads in grain clusters instead of clean grains. The remaining 5% of the grains were removed during a second pass of residuals. The moisture content of these sorghum varieties ranged between 9-10%. About 2 100 kg of grain were threshed in 3.5 h of threshing operation with 5 family labours arranged to operate the thresher.

Table 8 Performance of Axial-Flow Thresher for Sorghum under Village Conditions

Performance elements (%)	ICRISAT hybrids GG-1483	ICRISAT hybrids GG-1485	Maladandi Non-irrigated	Maladandi Irrigated	C S H-8 With concave	C S H-8 Without concave sieve
Moisture content	9.3	9.2	9.8	9.6	9.2	9.8
Threshing efficiency						
Pass I	98	98	90	95	95	92
Pass II	–	–	94	98	99	98
Grain with glumes	2	2	6	2	1	2
Broken grains	9.0	–	–	–	2.0	1.0
Cleaning efficiency	96	96	90	96	95	93
Grain output(kg/h)	720	730	600	630	650	650

Village: Shirapur, Maharashtra, India. Test period: Feb. 27 to March 3, 1981. Sample size: Bulk threshing

Table 9 Performance of Axial-Flow Thresher for Wheat under Village Conditions

Performance element (%)	U.P. 301	U.P. 310	
Moisture content	12.3	13.4	13.0
Threshing efficiency	97	92	96
Grains with glumes	3	8	4
Broken grains	0.4	1.2	1.4
Cleaning efficiency	97	92	96
Grain output(kg/h)	320	280	270

Village: Ranjole, Andhra Pradesh, India. Test Period: March 6 and 7, 1981. Sample size: Bulk threshing

About 5 *l* of petrol was consumed during this period.

Threshing efficiency and output for wheat was 97% and 300 kg/h at grain moisture content of 12 to 13%. The ratio of broken grains in the threshed material were about 1% with a cleaning efficiency of about 95% (Tables 8 and 9).

Conclusion

The original axial-flow thresher with cleaning attachments performed satisfactorily on paddy but failed on most other crops like sorghum, pearl millet, pigeonpea, chickpea and wheat. The thresher was modified to a considerable extent and it had become possible to thresh most of these crops with minor adjustments in threshing cylinder-concave and cleaning mechanism. On the basis of performance at ICRISAT centre in India and farmers' fields, the modified thresher performed satisfactorily. The results indicate that this thresher could be operated as a multicrop thresher, a wide range of crops with minor modifications. In village evaluations, the thresher was preferred over conventional threshers due to some additional merits which are its low labour requirements, ease in feeding earheads, less vibrations during operation and operational safety.

REFERENCES

Agricultural Engineering Today. July-August, 1980. Indian Society of Agricultural Engineering, New Delhi.

Araullo, E.V., et al, 1976. Rice, Post-harvest Technology, IDRC-530. International Development and Research Centre, Ottawa, Canada, PP 370-374.

Bainer, Roy. et al, 1960. Principles of Farm Machinery. John Wiley and Sons. P. 423.

Joshi, H.C. and K.N. Singh, 1980. Axial flow thresher with multicrop potential, IRRI News Letter. Feb.-March 1978.

Pathak, B.S. et al, 1978. Design development and evaluation of wheat straw bruising attachment for multicrop threshers of rasp bar type. Paper presented at XVI Annual Convention of ISAE at I.I.T., Kharagpur, W.B. India, December, 1978.

Singh K.N. and Joshi H.C. 1979. Axial flow paddy wheat thresher, Appropriate Technology Newsletter, Lucknow, U.P., India., 2(4): April, 1979 PP 5-6.

Test Code for Stationary Power Threshers for Wheat, IS: 6284-1975. Indian Standards Institution, New Delhi. India, 1978.

Thresher Test Procedure, Test Procedure, T-1, Issue No.1, IRRI, Manila, Philippines, May 25, 1978.

Verma, S.R. et al, 1978. Design aspects of feeding system for power threshers. Paper presented at XVI annual convention of ISAE, I.I.T., Kharagpur, W.B., India, December 18-20, 1978.

Virmant, S.M., et al, 1978. Rainfall probability estimates for selected locations of semi-arid India. Research Report No.1, FSRP, ICRISAT, India.

Walker, T.S. and Khirsagar, K.G. 1981. The village level impact of machine threshing and implications for technology development in SAT, India. Draft Paper. Economics Programme, ICRISAT, Patancheru, P.O. 502, -324, A.P. India.

ICRISAT (International Crops Research Institute for the Semi-Arid Tropics) 1980. Annual Report, 1978-79. India. ICRISAT. Patancheru, A.P. 502, -324.

Development of a Bulk-Milk Vending Machine

by
D.V.K. Samuel
Scientist-2
Division of Agric. Engg.
Indian Agric. Res. Institute
New Delhi-110012, India

S.A.D. Prasad
Scientist-2
Dairy Engg. Div.
National Dairy Res. Inst., S.R.S.
Bangalore-560030, India

Abstract

A prototype automatic milk vending machine with simple mechanisms to deliver a desired quantity of milk directly into the customer's vessel was designed and fabricated. The equipment will suit the bulk milk vending system of distribution of milk from dairies of capacity of about 10 000 *l* or more per day and which do not have bottling facilities. This system eliminates the traditional and costlier method of bottled milk distribution system and is also a more hygienic one. The observations made during the tests show that about 240 customers could be dispensed with half-litre milk each within an hour. The machine is inexpensive and accurate at ±0.5%.

Introduction

With the rapid progress of the dairy industry in India and the installation of large-sized market milk plants the problem of packaging and distribution system is of great significance. To keep the pace with this growth, attempts are being made to develop and use newer methods of dispensing milk along with traditional methods, keeping in view the hygienic conditions, easy handling, cost of distribution, convenience and satisfaction of customers. Among the various methods of milk distribution glass bottles, single service containers (sachets or polypacks) and bulk milk vending machines are used today for handling large quantities of milk.

A study reveals that the cost of handling one litre of milk through glass bottles (½ *l*) is US$0.0304 and through sachets (½ *l*) is US$0.0272 (**Table 1**). However, the cost of handling a litre of milk for distribution through vending machines is cheaper and less time-consuming. Also, since milk is not packed in any container the transport of milk from plant to booth is very efficient and cheaper. The capital and operational cost are comparatively lower than bottle-booth system of processing and distribution of milk. Lately, it has been felt that these costly machines have to be imported from foreign countries, wherein a large amount of foreign exchange is involved. Efforts are being made by many research workers and organizations in this direction to make this machine available locally. Keeping in view the above, an attempt was made to develop a bulk milk vending machine which would not only be readily available within the country but also acceptable cost-wise to users.

Table 1 Cost of Bottling vs Poly Bags Filling of Milk (Average of two large sized marked milk plants)

Mode of handling	Operational cost per lit of milk ($)	Material cost per lit of milk ($)	Total ($)
Glass bottles	0.0206	0.0098	0.0304
Poly bags (½ *l* capacity)	0.0048	0.0224	0.0272
Poly bags (1 *l* capacity)	0.0024	0.0198	0.0222

Source: Chowdhary A.K. & Patel R.D, 1980 – Convenient Polybacks vs Traditional Bottles.

Materials and Methods

The equipment consists of a stainless steel receiving tank of 200 *l* capacity (it can be higher), an insulated stainless steel milk delivery tank of 10 *l* capacity, a solenoid-operated milk valve at the outlet of delivery tank, a sanitary type recirculation pump, a coin switch, an integrated circuit electronic timer and control panel (**Fig. 1**). The delivery tank is

Acknowledgements: The authors wish to thank Shri D.R. Arora, Shri J.S. Popli and Shri S.S. Sharma for their contribution at various stages of development of this machine. Thanks are due to Dr. S.C. Sarma, Mr. R.S. Dhuria and Mr. Pawan Kumar for their interest in and valuable contributions to this project.

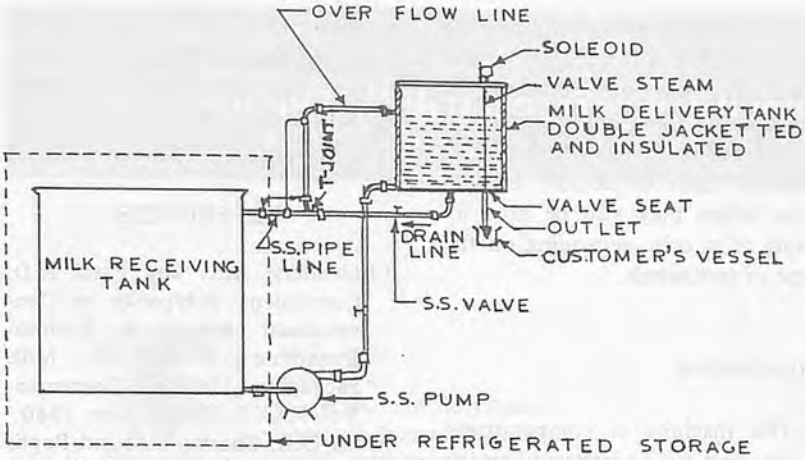

Fig. 1 Pipeline connection for automatic bulk milk vending machine.

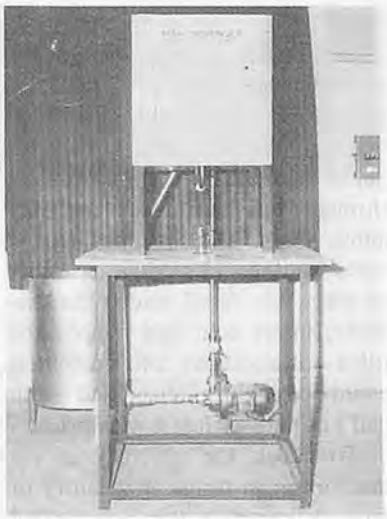

Fig. 2 Bulk milk vending machine.

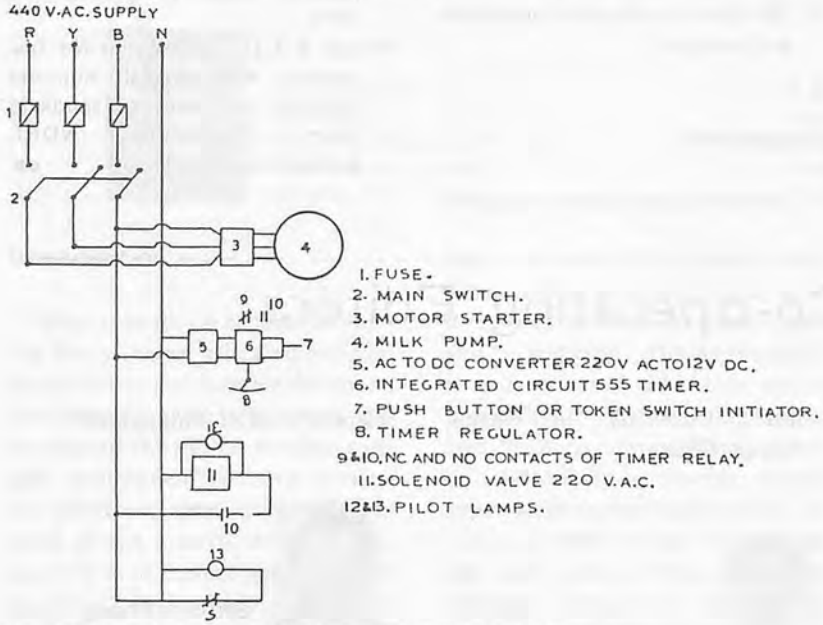

Fig. 3 Electrical connections for bulk milk vending machine.

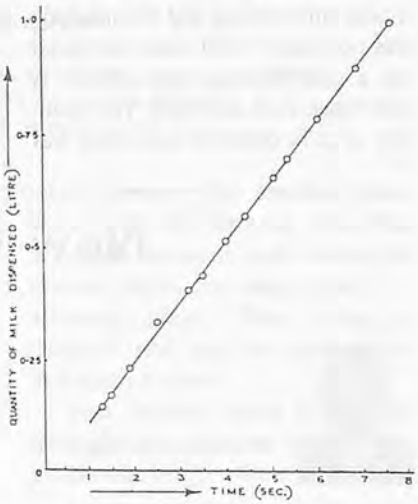

Fig. 4 Quantity of milk delivered and time of valve opening.

housed in a rectangular mild steel cabinet of size 22" x 20" x 20" which can be placed either on a rectangular steel-framed table or on a suitable platform. The coin switch which is used to start the machine operations is located on the front of the delivery tank cabinet (Fig. 2). However, when the machine is intended to be installed for public use, it can be housed in a small room (1.5 m x 2.0 m) with the provision of coin switch operation and delivery tank outlet outside it. This will help the customer to use the machine with much ease. The receiving tank unit and accessories have the provision of refrigeration to keep the milk safe from spoilage for a longer period.

Milk is circulated through the delivery tank with the help of milk pump and over-flow line maintaining a constant level of milk inside it. A coin/token inserted by the customer into the slot of coin switch operates the microswitch beneath it which, in turn, initiates the timer and the system to deliver milk into the customers' vessel placed right below the milk outlet (Fig. 3). The desired quantity of milk to be delivered to the customer's vessel is controlled by an integrated circuit electronic timer which opens and closes the delivery value (solenoid-operated milk valve) for a pre-determined and set period. By suitably adjusting and calibrating the timing mechanism of the timer the desired quantity of milk at the outlet can be controlled such as ½ *l* or 1 *l*, etc.

Discussion of Results

The machine was tested for various time settings of timer to deliver different quantities of milk. The timer was set to delivery 0.25,

0.5, 0.75 and 1 *l* of milk into customer's vessel. A linear relationship between the quantity of milk dispensed and time of milk valve opening was observed (**Fig. 4**). To dispense a standard half litre milk through this machine takes only about 4 s. If it is assumed that it takes another 11 s for a customer to place his vessel under the machine, insert coin and remove the filled vessel; about 240 customers could easily be dispensed with half *l* of milk each just within 1 h.

To check the accuracy of the mechanism in terms of quantity of milk delivered, a test was carried out. The timer was set for a particular time setting and the machine was operated 5 000 times by inserting a coin through coin switch. A one rupee coin was used. The quantity of milk delivered each time was collected in a graduated cylinder and recorded. The accuracy of the mechanism was thus calculated on the basis of these observations and it was found to be within the acceptable limit of ±0.5%. A particular token may also be used instead of a coin depending on the type of coinswitch.

Conclusions

1. The machine is comparatively low cost (to be estimated by the manufacturers).
2. The device is simple in operation and accurate.

Suggestions

1. The device may also be equipped with alternate power source other than electricity to ensure its operation during power failures/load shedding.

REFERENCES

Chowdhary A.K. and Patel R.D. Convenient Polypacks vs Conventional Bottles–A Techno-Economic Study of Milk Packaging, Indian Dairyman, Vol. XXXII, No. 11, Nov. 1980.

Arora D.R. Sharma S.S. and Popli, J.S. Development of Milk Dispensers, Indian Dairyman, Feb. 1977.

Prasad, S.A.D., Techniques for Dispensing Milk, Procd, Summer Institute on 'Recent Trends in Dairy Engineering, NDRI, Karnal (June 1981).

New Co-operating Editors

Richard Jinks Bani

Nationality: Ghanaian

Qualifications:

1983 M.Sc. in Agric. Engg, Silsoe College, U.K.

1979 B.Sc. (Hons) Agric., Univ. of Science and Technology, Kumasi, Ghana.

1986 Certificate (Planning and Promotion of Agro Industries) from National Institute of Small Industry Extension Training, India.

Experience:

Post-harvest technology development, Use of agro and industrial wastes and Agric. mechanization in Ghana.

Present Position:

Lecturer and Co-ordinator Agric. Engg. Div., Faculty of Agriculture, University of Ghana, Legon, Ghana

Israel Kofi Djokoto

Date of Birth: July 18, 1941

Nationality: Ghanaian

Qualification:

1972 Ph. D. Agric. Engineering

1969 M.Sc. Agric. Engineering

1967 B.Sc. Mech. Engineering

Experience:

Member, Ghaha Atomic Energy Commission

Member, Board of Directors for Ghana National Energy Board

Present Position:

Senior Lecturer, University of Science and Technology, Kumasi – Ghana

N.B. Dr. Djokoto is now a visiting scientist at IRRI, Philippines.

Sen-Fuh Chang

Date of Birth: October 20, 1947

Nationality: Taiwan

Qualification:

1985 Ph. D. University of California, Davis.

1970 B.S. National Taiwan Univ.

Experience:

1979-85 National Taiwan Univ., Lecturer.

1979 Council for Agric. Planning and Development, Specialist in farm machinery.

Present Position:

Associate Professor

Agric. Machinery Dept.

National Taiwan University

Bullock-Operated Dung-Cleaner

by
H.C. Joshi
Scientist S-1
(Farm Machinery and Power)
Livestock Production Research
Indian Veterinary Research Institute
Izatnagar, Bareilly (U.P.), India

D.N. Jana
Scientist S-1
(Livestock Production and Management)
Livestock Production Research
I.V.R.I., Bareilly (U.P.), India

D. Chaudhuri
Scientist S-1
(Farm Machinery and Power)
Farm Section, I.V.R.I.
Bareilly (U.P.), India

A.E. Nivsarkar
Scientist S-2
(Livestock Production and Management)
Livestock Production Research
I.V.R.I., Bareilly (U.P.), India

Introduction

Wild animals are capable of moving freely, hence select an environment that is comfortable for them. For livestock which has been domesticated the option to select suitable environment is rather restricted. However, animals can select a place in the area of their confinement. It is of utmost importance to provide a congenial environment for livestock in order to utilize their fullest genetic potential.

In order to create an improved environment, the first step is to create a neat and clean housing area that is important for livestock comfort and one that creates better hygenic conditions.

Among all dairy farm operations cleaning of sheds, byres, paddocks, etc. and dung disposal are time consuming and tiresome processes. The present study was undertaken to evaluate the dung-cleaning methods at the dairy farm of the Indian Verterinary Research Institute. The objective was to modify the cleaning methods without introducing too much mechanization. Two types of manually-operated dung cleaners were developed which were designated as 'without wheel type' and "wheel type". During the study it was observed that there was a possibility to develop a high capacity "bullock-operated dung cleaner". Therefore, a low-cost, wheel-type dung cleaner which could be operated with the help of a bullock pair and collect dung and plant residues varying from dry to wet consistency was developed.

Description of Machine

The machine is very simple in construction and easy to operate. It is balanced on two wheels and pulled by a pair of bullocks with the help of a rope (**Fig. 1**). Dung cleaning is carried out by the scraping plate of the machine **Fig. 2**.

The cleaner is provided with two solid iron wheels of 60 cm diameter each mounted on a solid axle of 2.5 cm diameter and 90 cm in length. These two wheels provide balance to the machine while in operation and act as single points while pressing the handle downward to lift the scraping blade. The lifting of the front blade breaks the contact with the dung from the scraping plate. Thus dung is dropped and can be accumulated at a desired place.

Two handles made from angle iron of 4 x 4 x 0.5 cm were welded to the axle of the unit with the help

Fig. 1 Bullock-operated dung cleaner

Fig. 2 Dung-cleaner in operation.

of two supporting angle irons. The extended portion of the handles was bent to provide a seat for the scraping plate which is attached to it by four bolts of 1.6 diameter x 5 cm with suitable washers.

The scraping plate was made of good quality wood of 150 x 45 cm size with 2.5 cm thickness. The bottom edge of the plate was provided with mild steel plate of 3 mm thickness for longer life and better scraping. The side plate is provided with a scraping plate to avoid squeezing of the dung side-wise while in operation. Iron rings are attached to the scraping plate to connect the dung-cleaner to the bullock pair for the operation of the machine.

Field Tests Performance

One pair of bullocks and two labourers were required for continuous operation of the dung cleaner. The results obtained after the initial training of the labourers and bullocks are shown in **Table 1**. One additional labourer was required to clean the corners and side of the paddocks which remained uncleaned by the dung cleaner. The man-hours shown in the table represent the total comulative time required by the three labourers carrying out the operation. Bullock-hours also represents the total cumulative time required by the two bullocks to carry out the work.

Table 1 Field Tests Results of Bullock-Operated Dung Cleaner under Dry and Wet Dung Conditions

Area	Wet dung condition		Dry dung conditions	
	Man-hrs	Bullock-hrs	Man-hrs	Bullock-hrs
m^2	h – min	h – min	h – min	h – min
4 000	8 – 00	5 – 20	7 – 00	4 – 40
4 000	7 – 00	4 – 40	6 – 30	4 – 20
4 000	7 – 30	5 – 00	6 – 00	4 – 00
4 000	7 – 00	4 – 40	6 – 15	4 – 10
4 000	6 – 00	4 – 00	5 – 00	3 – 20
4 000	6 – 30	4 – 20	4 – 00	2 – 40
4 000	5 – 45	3 – 50	4 – 00	2 – 40
4 000	5 – 15	3 – 30	4 – 00	2 – 40
4 000	...	...	3 – 24	2 – 16
4 000	...	...	3 – 00	2 – 00
4 000	...	...	3 – 00	2 – 00
Average	6 – 37	4 – 25	4 – 44	3 – 10

The average time required to clean a 4 000 m^2 area under was 4 h 44 min under dry condition and 6 h 37 min under wet conditions. These periods of time were much less than the time used with manually-operated dung cleaner which were 12.81 man-hours and 15.62 man-hours, respectively. (Joshi et al 1982) or saving of 63% and 58% of the time. Further drudgery of work was considerably reduced as pulling of the cleaner carried out by the animals. However, an additional pair of bullock was required for the operation. It was also observed that due to a good balance of the machine, the cleaning of surface was better.

The machine is now used for routine dung cleaning of the Institute's farm and performing excellent work. The cost of operation per ha was Rs.28.53 and Rs.42.02 for dry and wet dung conditions, respectively. In comparison, these Rs.88.45 and Rs.103.13, Rs.50.05 and Rs.73.26, Rs.123.33 and Rs.157.15 for dry and wet dung conditions, respectively for dung cleaning using the Belacha dung cleaner (without wheels) and tractor-operated, multi-purpose blade terracer (Joshi et al 1982).

REFERENCES

1. Davis R.F., Modern Dairy Cattle Management. 1962 Prentice-Hall of India Pvt., Ltd., New Delhi.
2. Esmay, M.L., Principles of Animal Environment 1978 AVI Publishing Co. Inc. West Port, Connecticut.
3. Joshi, H.C. et al Development and Testing of a Manually-Operated Dung Cleaner. 1982. AMA Vol. XIII No. 2.

A Low Cost Village-Level Milk Sterilizer

by
S.L. Shrivastava
Senior Research Assistant
Harvest and Post Harvest Technology
(ICAR) Scheme
Post Harvest Technology Centre, Indian Institute of Technology
Kharagpur-721302, India

N.G. Bhole
Prof., Head and Investigator-in-Charge
Harvest and Post Harvest Technology
(ICAR) Scheme
P.H.T.C., I.I.T.
Kharagpur, India

Abstract

Preservation of milk in rural areas is still a problem owing to the lack of adequate refrigeration facilities. An attempt was made to develop a low-capacity, village-level milk sterilizer. A 12-*l* pressure cooker was used for this purpose. Milk sealed in a stainless steel container with a tightly fitting lid could be sterilized by heating it in the cooker at its normal working pressure for 3 min. Processing of one batch of 7.5 *l* of milk could be accomplished in 45-48 min at a cost of 24 paise (1,000 paise = U$1.00) per litre of milk for this size batch and the same was reduced to 15 paise per litre of milk with a bigger batch of 15 *l*. It can further be reduced if common domestic fuels are used in place of gas.

Introduction

Milk is a highly perishable commodity. It has to be processed without any appreciable delay after production in order to avoid its spoilage. In India, about 80% of the milk is produced in villages. These villages are not very well connected with the urban areas where most of the processing plants are situated. There are no facilities for refrigeration or storage of milk in rural areas. These circumstances hinder the conveyance of milk in good condition to the urban consumers, particularly in rainy season. Thus the farmers may be forced quite often to sell the milk at throw-away prices. Under these circumstances, the development of a system to process milk in villages will prove very helpful to the rural milk producers. Once the milk is processed in villages, it can be carried safely even from most interior villages to distant urban places for distribution to the consumers.

The present study was undertaken by the Indian Council of Agricultural Research (ICAR) under the Scheme of Harvest and Post-Harvest Technology (HPHT), stationed at the Indian Institute of Technology, Kharagpur (West Bengal). The project was aimed at developing a village level milk sterilizer.

Acknowledgement: Authors wish to thank Dr. S.R. Prasad, Dairy and Food Engineering Section, Agricultural Engineering Department, I.I.T., Kharagpur, for his valuable help at various stages of this study. Sri Narayan Bagchi is also thanked for neatly typing the manuscript of this paper.

Methods of Processing of Milk

The most widely used methods for processing milk in order to increase its shelf-life are pasteurization and sterilization. Pasteurization of milk is the heat treatment which kills the pathogenic bacteria present in milk thereby increasing its shelf-life under refrigerated conditions (2).

The commercial sterilization of milk depends on heating to a high enough temperature for a long enough time to destroy almost all the bacteria present in raw milk. The temperature of milk treatment may be 105°C to 110°C and the total time of the order of 30 to 45 min. There are other processes becoming increasingly important in which milk is heated by a continuous process for higher temperatures and for correspondingly shorter times than are otherwise possible (130°C to 150°C for a few seconds), and it becomes almost truly sterile. This type of treatment is called ultra-high temperature processing (1). These processes, however, involve huge initial investments and, therefore, cannot be recommended at the village level.

In India, under the Prevention of Food Adulteration Act Rules, sterilized milk is defined as that obtained by "heating milk continuously to a temperature of 115°C for 15 min or 145°C for 3 s or equivalent time-temperature combination to ensure preservation at room temperature for a period of not less than 15 days" (4). The temperature required to achieve sterilization should be such that the nutritive quality of milk is not deteriorated considerably.

Materials and Methods

Sterilizing equipment: It was decided to use a pressure cooker for sterilizing the milk. A pressure cooker operates at an absolute pres-

sure of about 2 kg/cm^2 giving a temperature of about 120°C. This temperature, when applied for a predetermined length of time, imparts adequate sterilizing effect to the milk. Besides, a pressure cooker is a versatile appliance which can be used for a variety of purposes such as cooking food, parboiling of paddy etc. Thus a village milk producer will readily adopt such a versatile equipment. The heating source may be a traditional *Chulha*, a furnace operating on firewood, which is already being used by the villagers. For experimental purpose, a 12-*l* 'Prestige' pressure cooker fitted with a pressure gauge on its lid was used. The heating source used was an Indane gas stove.

The experiments were carried out in two steps. Firstly, the identification of treatment, i.e., determination of the holding time required for the milk to be sterilized at the operating pressure of a pressure cooker. This was accomplished by giving different holding time treatments to the milk sealed in cold drink bottles and storing it at ambient conditions for a period of 15 days. In the second step, the results of the in-bottle experiments were verified with bigger size stainless steel containers.

Identification of treatment

Cold drink bottles with normal capacity of 200 *ml* were used in the experiments. The bottles were filled with about 180 *ml* of fresh cow milk providing sufficient headspace for expansion of milk during heating. Mild steel caps were then tightly placed on the bottles using a hand operated bottle capping machine (**Fig. 1**). The capped bottles were loaded on one of the separators of the cooker. A maximum of eight bottles could be loaded at a time. The cooker was filled with 500 ml of water and the separator, carrying bottles, was placed in the cooker. The lid of the cooker was then properly fitted.

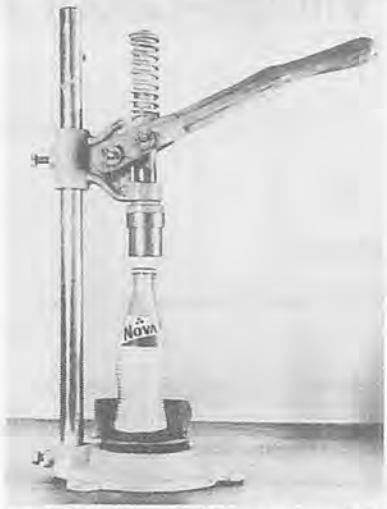

Fig. 1 Hand-operated bottling machine.

The cooker was first heated without weight on the air vent so as to drive out the air. When steam started coming out, the weight operating pressure of the cooker, i.e., about 1.02 kg/cm^2 (**Fig. 2**). The heating was continued at this pressure for the desired holding time. Holding times of 2, 3, 4, 5 and 6 min were used with different batches. After the holding time the gas was put off and the pressure was allowed to release. Then the weight was removed and the cooker was allowed to cool for 15 min. Therefore, the lid was opened, the bottles were removed and kept in a tray.

Preliminary trials showed that cold bottles had a problem of breakage when loaded directly into the cooker. Preheating of the bottles to about 65°C was, therefore, necessary.

The milk samples were subjected to *turbidity test* immediately after the treatment in order to test the sterility of milk. The sterilized milk in bottles was then stored at ambient conditions. *Organoleptic, pH* and *clot-on-boiling tests* were performed on the milk after 5, 10 and 15 days of storage. The standard procedures for these tests as specified by the Indian Standards Institution were followed (3). Results indicate that the milk samples treated for the holding times of 3 min and more could be stored safely for a period of 15 days. The holding time of 2 min prolonged the shelf-life up to 5 days but beyond that the samples curdled. The holding time of 3 min was, therefore, chosen to be tried with bigger size containers.

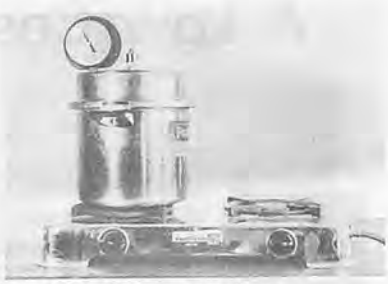
Fig. 2 Sterilizer in operation.

Verification of Results of Large Containers

A pressure cooker can be filled up to 2/3 of its capacity. Therefore, stainless steel containers of 8-*l* capacity were fabricated. The dimensions of the containers are shown in **Fig. 3**. A better arrangement of the lid is shown in **Fig. 4**. Testing procedure was the same as that of in-bottle experiments. The container was filled with 7.5 *l* of milk. The lid was tightly closed and the container was placed in the cooker. Three min. holding time was maintained after attaining the pressure of 1.02 kg/cm^2. Gas was then put off and the pressure was allowed to release. The container was taken out and kept in cold water in order to cool the milk as well as to generate the heat for preheating of other containers. Thereafter it was stored in ambient conditions. The milk thus treated in steel containers was also subjected to the quality tests mentioned earlier.

Cost Analysis

Milk being a highly perishable

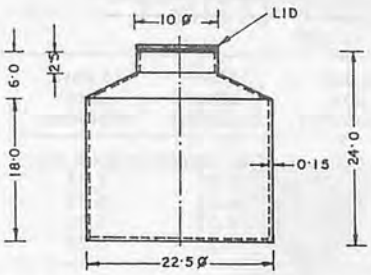

Fig. 3 Stainless steel container.

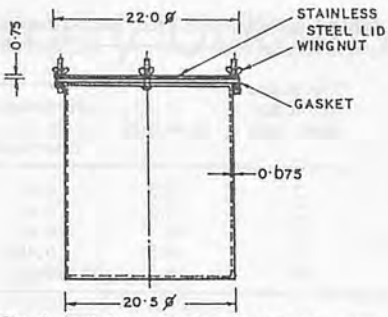

Fig. 4 Stainless steel container with modified lid.

commodity, has to be processed within 4 to 5 h of its production. **Table 1** shows that processing of one batch of 7.5 *l* of milk takes about 45 to 48 min. If four batches are handled every morning and evening, it is possible to process 60 *l* of milk per day using a 12-*l* pressure cooker. The heating source used during the experiments was Indane gas and the same has been used in this calculation. The following assumptions were made for the purpose of cost analysis: Life of equipment – 12 years, Resale value – nil, Housing – nil, Annual interest rate – 10%, Annual maintenance – 2%, Labour charges – Rs. 10 per man-day, Gas charges – Rs. 50 per cylinder, Gas consumption – One cylinder lasts for 150 h, Maximum storage period before the processed milk is disposed – 3 days.

Various costs are calculated as follows:

I Capital cost:

a) Pressure cooker Rs. 400
b) Gas stove Rs. 500
c) Stainless steel containers (24 numbers @Rs.175 each) Rs.4200
d) Security deposit for the gas cylinder Rs. 300

Total investment Rs.5400

and depreciable investment (5400-300) =Rs.5100

II Fixed cost:

a) Depreciation $\frac{\text{Rs.}5{,}100}{12}$ = Rs. 425 per year

b) Interest on investment $\frac{5400 \times 10 \times 1}{2 \times 100}$ = Rs. 270 per year

c) Housing Nil

Total fixed cost (a+b+c) Rs. 695 per year

Fixed cost per litre of milk processed Rs. $\frac{695}{365 \times 60}$ = Rs. 0.03 = 3 paise

III Operating cost:

a) Labour charge (one man-day) Rs.10 per day

b) Fuel and utility charges –

i) Heating requirement 6 h per day

Cost of heating by gas Rs. $\frac{50}{150}$ = Rs.1/3 per h

∴ Fuel charges 6 × 1/3 = Rs.2 per day

ii) Cost of washing the containers (@5 paise per container) Rs.0.40 per day

c) Maintenance charges Rs. $\frac{2 \times 5100}{100}$ =Rs.102 per year

Daily maintenance cost Rs. $\frac{102}{365}$ = Rs.0.28

Total processing cost per day (a+b+c) =Rs.12.68

and operating cost per litre of milk Rs. $\frac{12.68}{60}$ = Rs.0.211 ≅ 21 paise

Hence total processing cost (II + III) = 24 paise per litre of milk.

Thus the cost of sterilizing milk with this experimental set-up comes out to be 24 paise per litre. If a pressure cooker of 25 litres capacity is used which makes possible, the processing of 15*l* of milk per batch, the sterilization cost is estimated in a similar way to be about 15 paise per litre of milk.

Table 1 Functional Performance of Pressure Cooker as Milk Sterilizer

(Unit: min.)

Operation	Time consumed			
	Glass bottles		Stainless steel containers	
	Without preheating*	With preheating	Without preheating	With preheating
Steam generation	9 – 10	2 – 3	18 – 20	10 – 12
Pressure building	12 – 14	4 – 5.5	40 – 44	15 – 18
Holding	2 – 6	2 – 6	3	3
Pressure releasing	10 – 11	8 – 9	15 – 16	15
Cooling	15	15	Not required	
Total	50 – 40	33 – 35.5	78 – 82	45 – 48

* Processing without preheating resulted in the breakage of some of the bottles.

Results and Discussion

Performance of Sterilizer

The cooker served satisfactorily as a sterilizer. Cold bottles had a problem of breakage when loaded directly into the cooker. Therefore, preheating of milk-filled bottles to about 65°C was necessary. Preheating of stainless steel containers was not required in so far as breakage was concerned. However, this helped in reducing the heating time required inside the cooker as is evident from **Table 1**. Preheating can be accomplished by means of the heat generated from the hot containers as they are unloaded from the cooker. The steel container (**Fig. 3**) could not be made perfectly tight. Therefore, waxing of the lid was necessary. An alternative arrangement of the lid is suggested as shown in **Fig. 4**. In this arrangement a flange is provided at the mouth of the container and the circular lid is tightened with this flange by means of nut-bolts with a rubber gasket in between. This system will be perfectly leakproof and no waxing will be required. Cleaning of this type of container will also be easier.

Quantitative Assessment

a) Turbidity tests conducted immediately after each treatment produced negative results indicating that all the treatments adequate sterilizing effect to the milk.

b) Organoleptic as well as clot-on-boiling tests proved that the milk samples which were given treatments of 3 min. and more, could be stored safely at ambient conditions during the storage period of 15 days. Milk samples treated for two minutes were observed to be in good condition up to five days, but on the 6th day these samples curdled. This treatment, therefore, was not adequate from the point of view of the definition stated earlier.

c) pH values on milk samples at different stages are shown in **Table 2**. Very little reduction in pH values was observed during the strage period of 15 days.

Table 2 Effect of Different Heat Treatments on pH of Milk at Different Stages

Treatment (Holding time) min	pH of milk				
	Raw milk	Immediately after treatment	5 days after treatment	10 days after treatment	15 days after treatment
2	6.5	6.45	6.3	Milk curdled on sixth day	
3	6.5	6.45	6.42	6.37	6.34
4	6.5	6.42	6.39	6.35	6.31
5	6.5	6.40	6.35	6.32	6.30
6	6.5	6.38	6.33	6.31	6.28

Processing Cost

The cost of sterilizing milk by this method was 24 paise per litre of milk. This cost, however, is dependent on the size of the batches, number of batches processed every day, type of heating source used and length of storage period before the processed milk is disposed. For example, with a bigger size batch of 15 *l* the sterilization cost is estimated to be reduced to 15 paise per litre of milk.

Conclusion

This study leads to the conclusion that if milk is heated in a pressure cooker at its normal working pressure, i.e., about 2 kg/cm^2 absolute, for a period of 3 min it is properly sterilized. The milk thus sterilized in sealed containers can be stored at ambient conditions for a period of at least 15 days. This method will facilitate the processing of milk in small quantities in rural areas in order to increase the shelf-life of surplus milk. It will also be possible to handle large quantities of milk by increasing the size and number of batches.

In the heat sterilization of milk, losses of some of the components must be expected. However, the objective of sterilization of milk is to prolong the storage life of this scarce commodity at reduced cost. The minutes lost which are reportedly well within limits, can therefore be ignored.

Recommendations

Milk can be sterilized by heating at the normal working pressure of a cooker for 3 min. Pressure cookers are available up to 25-*l* capacity. Any suitable size can be selected depending on the quantity of milk to be processed. Stainless steel containers of two-thirds of the capacity of cooker having arrangement of tightly fitting lids should be used. The number of batches to be handled per day can be decided by the availability of milk, storability of raw milk and investment capacity of the processor.

REFERENCES

Burton, H., J. Pien and G. Thieulin (1965). Milk Sterilisation. Monograph. FAO, Rome.

Eckles, C.H., W.B. Combs and H. Macy (1976). Milk and Milk Products. Tata McGraw Hill Publishing Company, Ltd., New Delhi.

Indian Standards Institution (1962). Indian Standard Methods of Test for Dairy Industry – Part III, Bacteriological Analysis of Milk. IS: 1479 (Part III), pp. 8-17.

Prevention of Food Adulteration Act Rules (1968). Ministry of Agriculture, Govt. of India. ■■

Farm Machinery Utilization Planning

by
Toshio Konaka
Institute of Agric. Engg.
University of Tsukuba
Sakura, Ibaraki, Japan

Abstract

In order to plan and design a farm mechanization system, a farm machinery data base, farm operation data base and farm machinery utilization planning program were set up on a personal computer NEC-PC9800.

The maximum areas covered by a farm machinery set or optimal machinery set for a given area were analyzed by simulation using this program.

Cost analysis of farm machinery utilization planning is shown in tables so that we may compare and select the optimal machinery sets and laborers for a certain cultivation system.

Energy analysis was also performed.

Introduction

It is very important to design optimal farm operation systems. In order to use farm machinery effectively in farm operations, a farm machinery utilization planning program was set up on a personal computer NEC-PC9800. It was coded with BASIC so that any person can easily design a plan by a conversation type program. Machinery data and fuel consumption data of each unit of farm operation were filed in the disk memory of a personal computer.

Several different farm mechanization data were put into the programs and were analyzed to improve the use of farm machinery and cost.

Planning and Design of Model

The planning and design of a model of a farm operation system for rice cultivation was developed and coded by BASIC to allow key-in as a conversation type (facing to CRT-display) for the calculation of labor and machinery usage and economic analysis.

Input data

Data were put into the model as follows:

For system –

a) Name of farm operation system
b) Outline of the system
c) Main machinery
d) Conditions of cultivation and field

For each operation –

e) Name of each operation
f) Duration of each operation
g) Name of machine for each operation
h) Number of machines in each operation
k) Field efficiency of each machine
l) Number of laborers in each operation
m) Daily working rate for each operation
n) Workable day rate for each operation
p) Fuel consumption rate for each operation

Output data

After processing input data, the following output data were printed:

a) Actual coverage
b) Labor required
c) Cost of machinery
d) Calories required
e) Critical farm operation

Calculation

In order to calculate the coverage when multiple farm operations (more than 2) were scheduled on the same date, Linear Programming technique was applied based on the duration and capacity of each farm operation.

Key in operation

Key in operations in this simulation program are performed by following the questionnaire on the CRT display.

Print out of the data is typed: a) normal 80 characters/line or 136. b) in Japanese or in English. c) all data or a part of the data, after being arranged by key input, are typed.

Coding program

Coding program of the planning and design of the model of an operation system for rice cultivations was conducted using BASIC and required about 1500 lines for the original.

Equations for Economic Analysis

COSTMHA	=	COSTRHA + COSTHA	(1)
COSTRHA	=	TRCOSTOL*TR/ TRTOL	(2)
TRCOSTOL	=	(TRICEP-TRICEE)* RFIXTR*MDAIMAX	(2-a)
COSTHA	=	CFIX+VAR	(3)
CFIX	=	YFIX*ROTHA/ROTHAM (NKI)/COVERMIN	(4)
YFIX	=	DEPRE+YREP+YHOUSE +YINT+YTAX+YINSUR	(5)
DEPRE	=	(PRICEP-PRICEE)/YLIFE	(5-a)
YREP	=	PRICEP*CFREP*NDAI	(5-b)
YHOUSE	=	PRICEP*CFHOUSE*NDAI	(5-c)
YINT	=	PRICEP*CFINT*NDAI/2	(5-d)
YTAX	=	PRICEP*CFTAX*NDAI	(5-e)
YINSUR	=	PRICEP*CFINS*NDAI	(5-f)
VAR	=	COSTF+OIL+WAGE	(6)
COSTF	=	FCHA*PRICEGA	(6-a)
COSTF	=	FCHA*PRICEKE	(6-b)
COSTF	=	FCHA*PRICEDL	(6-c)
OIL	=	COSTF*0.3	(7)
WAGE	=	HWAGE*RLAT	(8)
CALSA	=	CALF+CALM+CALTR	(9)
CALMA	=	CALM+CALTR	(10)
CALF	=	FCHA*CALGA (or *CALKE or *CALDL)	(11)
CALM	=	COSTM*ENERG	(12)
COSTM	=	DEPRE*ROTHA/ROTHAM (NKI)/COVERMIN	(13)
CALTR	=	COSTTRA*ENERG	(14)
COSTTRA	=	TDEPRE/COVERMIN	(15)
TDEPRE	=	(TPRICEP-TPRICEE)/ TYLIFE*MDAIMAX	(16)

Terminology

AHOUR	Annual service hours	hour/year
CALDL	Calories of diesel light oil	Mcal/l
CALFF(M)	Fuel calories/ha or machine	Mcal/ha
CALGA	Calories of gasoline	Mcal/l
CALKE	Calories of kerosene	Mcal/l
CALM	Calories of implement manufacturing	Mcal/ha
CALMA	Calories of machine manufacturing	Mcal/ha
CALSA	Calories of farm operation	Mcal/ha
CALTR	Colories of tractor manufacturing	Mcal/ha
CFHOUSE	Housing cost coefficient	%
CFINS	Insurance rate	%
CFINT	Annual interest rate	%
CFIX	Fixed cost	kyen/ha
CFREPT	Repair cost coefficient per hour	%
CFTAX	Tax rate	%
COSTF	Fuel cost per ha	kyen/ha
COSTFM(M)	Cost of machine	kyen/ha
COSTM	Cost of implement manufacturing	kyen/ha
COSTMHA	Cost of machine usage	kyen/ha
COSTMM(M)	Total machine cost	kyen
COSTRHA	Cost of tractor	kyen/ha
COSTTR	Cost of tractor manufacturing	kyen/ha
COVERMIN	Actual coverage	ha
DEPRE	Yearly depreciation	kyen/year
ENERG	Energy per Yen	kcal/yen
FCA	Field capacity	ha/h
FCAM(M)	Field capacity of machine	ha/h
FCHA	Fuel consumption per hectare	l/ha
FCHAM(M)	Fuel consumption/ha of machine	l/ha
FIXM(M)	Fixed cost of machine	kyen/ha
HWAGE	Wages per hour	yen/hour
MACS(M)	Machine name	
MDAI(M)	How many machines	
MDAIMAX	Number of tractors	
MEN	Laborer per machine	
MENMAX	Maximum number of labor	
MENS	Laborer per operation	
MKI(M)	Machine number	
NDAI	Number of implements	
NKI	Service machine number	
NKIND	Operation code	
NSAGYO	Number of operations	
OIL	Lubricant cost	kyen/ha
PRICEDL	Price of diesel light oil	yen/l
PRICEE	Salvage value	kyen
PRICEGA	Price of gasoline	yen/l
PRICEKE	Price of kerosene	yen/l
PRICEP	Initial cost	kyen
RFIXTRr	Tractor fixed expense rate	
RLAT	Service hours of labor	h/ha
ROTHA	Service hours of machine	h/ha
ROTHAM(M)	Hours of machine usage	h/ha
SA$	Name of farm operation	20
SAG$	Name of implement	20
TCCOVER	Area covered by operation	ha
TDEPRE	Depreciation of tractor	kyen
TPRICEP	Purchase price of tractor	kyen
TPRICEE	Salvage value of tractor	kyen
TR	Hours of tractor usage	h/ha
TRCOSTOL	Tractor usage cost	kyen/ha
TRTOL	Total hours of tractor usage	h/ha
TYLIFE	Years of endurance of tractor	year
VAR	Variable cost	kyen/ha
VARM(M)	Variable cost of machine	kyen/ha
WAGE	Wages	kyen/ha
YFIX	Annual fixed expense	kyen
YHOUSE	Annual housing cost	kyen
YINSUR	Insurance fee	kyen
YINT	Annual interest	kyen
YLIFE	Years of endurance	year
YREP	Annual repair cost	kyen
YTAX	Annual taxes	kyen

Results of Simulation

There are so many combinations of machinery sets that several of them were tested in this study, i.e., a) power tiller (small scale tractor) and binder system (SB), b) 18PS tractor (medium scale tractor) and binder system (MB) and (c) 36PS tractor (large scale tractor) and combine system (LC).

A combination of machinery sets applied to simulation and the results of economic and energy analysis are shown in **Table 1, 2 and 3.**

In the systems analysis of SB set series (based on power tiller and binder), the maximum coverage was 1.7 ha. 3.5 ha and 5.2 ha when the numbers of power tillers and binders were 1, 2 and 3, respectively.

The cost of machinery was 971, 917 and 942 kyen/ha, and the number of calories required in the system was 4 358, 4 030 and 4 166 Mcal/ha.

The coverage of machinery set SB10 was improved from 1.5 to 1.7 ha (SB11) by increasing the number of transplanters from 1 to 2, which corresponded to a critical farm operation. Also, the cost of machinery and energy required were improved from 991 to 971 kyen/ha and from 4 473 to 4 358 Mcal/ha, respectively.

In the systems analysis of MB set series, maximum coverage was 4.1, 8.1 and 11.4 ha when the numbers of tractors were 1, 2 and 3, respectively.

The cost of machinery was 771, 766 and 764 kyen/ha, and the number of calories required in the system was 3 918, 3 883 and 3 865 Mcal/ha.

The coverage of machinery set MB10 was improved from 2.8 to 3.8 ha (MB11) by increasing the number of binders and threshers from 1 to 2, respectively, and by increasing the number of transplanters from 1 to 2, which corresponded to a critical farm operation. Also, the cost of machinery and energy required were improved from 826 to 766 kyen/ha and from 4 184 to 3 874 Mcal/ha, respectively.

The coverage of MS11 was also improved from 3.8 to 4.1 ha (MB12) by increasing the number of dryers from 1 to 2, which corresponded to a critical farm operation, but the cost of machinery and energy required were not improved because the cost and energy of the dryer increased more than the decrease of those of the whole system by improving the coverage.

In the systems analysis of LC set series, the maximum coverage was 5.1 and 9.8 ha when the number of tractors was 1 and 2, respectively.

In the same way, the coverage of LC10 was improved from 4.6 to 5.1 ha (LC11) by increasing the number of dryers from 3 to 4. Also, the cost of machinery was improved from 776 to 753 kyen/ha in LC11, which was the most economical combination of machinery set in this simulation.

Table 1 Systems Analysis of SB Set Series

No.	Operation	Duration				Implement	SB10		SB11		SB20		SB21		SB30		SB31		SB32		SB33		SB40	
							ND	MN	ND	MN	ND	MN	ND	MN	ND	MN	ND	MN	ND	MN	ND	MN	ND	MN
1	Seed preparation	5	1	5	30	Hand	0	2	0	2	0	2	0	2	0	2	0	2	0	2	0	2	0	2
2	Seedling	5	5	5	30	Hand	0	2	0	2	0	2	0	2	0	2	0	3	0	2	0	3	0	4
3	Tillage	5	16	5	31	Rotary	1	1	1	1	2	2	*2	2	3	3	3	3	3	3	*3	3	4	4
4	Fertilizing	6	1	6	20	Hand	0	2	0	2	0	2	0	2	0	2	0	2	0	2	0	2	0	3
5	Puddling	6	1	6	20	Paddy harrow	1	1	*1	1	2	2	2	2	3	3	3	3	3	3	*3	3	4	4
6	Transport	6	1	6	20	Trailer	1	4	1	4	1	4	1	4	1	4	1	4	1	4	1	4	1	4
7	Transplant	6	1	6	20	Transplanter	*1	2	2	4	*2	4	3	6	*3	6	4	8	*4	8	5	10	6	12
8	Herbicide	6	1	6	25	Gra. applicator	1	1	1	1	1	1	1	1	1	1	1	1	1	1	1	1	2	2
9	Weeding	6	6	7	20	Hand	0	1	0	2	0	1	0	2	0	2	0	2	0	3	0	3	0	4
10	Pesticide	7	6	7	11	Power duster	1	2	1	2	1	2	1	2	1	2	1	2	1	2	1	2	2	4
11	Herbicide	7	21	7	25	G. applicator	1	1	1	1	1	1	1	1	1	1	1	1	1	1	1	1	2	2
12	Pesticide	7	21	7	25	Power duster	1	2	1	2	1	2	1	2	1	2	1	2	1	2	1	2	1	2
13	Pesticide	8	1	8	7	Power duster	1	2	1	2	1	2	1	2	1	2	1	2	1	2	1	2	1	2
14	Fertilizing	8	6	8	10	Hand	0	2	0	2	0	2	0	2	0	2	0	2	0	2	0	2	0	3
15	Pesticide	8	16	8	20	Power duster	1	2	1	2	1	2	1	2	1	2	1	2	1	2	1	2	1	2
16	Pesticide	8	16	8	20	Power duster	1	2	1	2	1	2	1	2	1	2	1	2	1	2	1	2	1	2
17	Pesticide	9	6	9	10	Power duster	1	2	1	2	1	2	1	2	1	2	1	2	1	2	1	2	1	2
18	Pesticide	9	6	9	10	Power duster	1	2	1	2	1	2	1	2	1	2	1	2	1	2	1	2	1	2
19	Harvesting	10	15	11	10	3-row binder	1	1	1	1	2	2	2	2	2	2	3	3	3	3	3	3	4	4
20	Tansport	10	15	11	10	Hand	0	4	0	4	0	4	0	4	0	4	0	4	0	8	0	8	0	8
21	Threshing	10	15	11	10	Thresher	1	4	1	4	1	4	2	8	2	8	2	8	3	12	3	12	4	16
22	Transport	10	15	11	10	Trailer	1	2	1	2	1	2	1	2	1	2	1	2	2	4	2	4	2	4
23	Drying	10	16	11	15	Dryer 2.7m³	1	1	1	1	2	1	2	1	3	2	*3	2	4	2	4	2	*4	2
24	Husking	10	16	11	15	Husker 75.0mm			1	3	1	3	1	3	1	3	1	3	1	3	1	3	1	3
25	Manure spread	10	16	12	30	Trailer	1	4	1	4	1	4	1	4	*1	4	2	8	2	8	2	8	2	8
26	Straw treatment	11	16	12	30	Hand	0	2	0	2	0	2	0	2	0	2	0	2	0	2	0	2	0	2
Tractor (5 PS)						= MDAIMAX	1		1		2		2		3		3		3		3		4	
Laborer (max)						= MENMAX	4		4		4		8		8		8		12		12		16	
Coverage (ha)						= COVERMIN	1.5		1.7		2.9		3.5		4.1		4.4		4.7		5.2		6.6	
Cost of machinery (kyen/ha)						= COSTMHA	991		971		950		917		942		958		972		948		920	
Calorie of total system (Mcal/ha)						= CALSA	4473		4358		4224		4030		4166		4269		4360		4223		4046	

Note: ND = machine, MN = labor, * = critical farm operation

Table 2 Systems Analysis of SB Set Series

No.	Operation	Duration				Implement	NB10		MB11		MB12		MB20		MB21		MB22		MB30		MB31		MB32	
							ND	MN	ND	MN	ND	MN	ND	MN	ND	MN	ND	MN	ND	MN	ND	MN	ND	MN
1	Seed preparation	5	10	5	30	Hand	0	2	0	2	0	2	0	2	0	2	0	4	0	2	0	2	0	5
2	Seedling	5	10	5	30	Hand	0	2	0	3	0	4	0	3	0	4	0	8	0	3	0	4	0	12
3	Tillage	5	16	5	31	Rotary	1	1	1	1	1	1	2	2	2	2	2	2	3	3	3	3	3	3
4	Fertilizing	6	1	6	20	Hand	0	2	0	2	0	2	0	2	0	2	0	4	0	2	0	2	0	6
5	Puddling	6	1	6	20	Paddy harrow	1	1	1	1	1	1	1	1	2	2	2	2	1	1	2	2	3	3
6	Transport	6	1	6	20	Trailer	1	4	1	4	1	4	1	4	1	4	1	4	1	4	1	4	2	8
7	Transplant	6	1	6	20	Transplantor	*1	2	2	4	2	4	2	4	4	8	*4	8	3	6	4	8	6	12
8	Herbicide	6	6	6	25	Gra. applicater	1	1	1	1	1	1	1	1	1	1	1	1	1	1	1	1	2	2
9	Weeding	6	6	7	20	Hand	0	1	0	2	0	2	0	2	0	3	0	4	0	3	0	3	0	6
10	Pesticide	7	6	7	11	Power duster	1	2	1	2	1	2	1	2	1	2	1	2	1	2	1	2	1	2
11	Herbicide	7	21	7	25	G. applicator	1	1	1	1	1	1	1	1	1	1	2	2	1	1	1	1	2	2
12	Pesticide	7	21	7	25	Power duster	1	2	1	2	1	2	1	2	1	2	1	2	1	2	1	2	1	2
13	Pesticide	8	1	8	7	Power duster	1	2	1	2	1	2	1	2	1	2	1	2	1	2	1	2	1	2
14	Fertilizing	8	6	8	10	Hand	0	2	0	2	0	2	0	2	0	2	0	2	0	2	0	2	0	6
15	Pesticide	8	16	8	20	Power duster	1	2	1	2	1	2	1	2	1	2	1	2	1	2	1	2	1	2
16	Pesticide	8	16	8	20	Power duster	1	2	1	2	1	2	1	2	1	2	1	2	1	2	1	2	1	2
17	Pesticide	8	16	8	20	Power duster	1	2	1	2	1	2	1	2	1	2	1	2	1	2	1	2	1	2
18	Pesticide	9	6	9	10	Power duster	1	2	1	2	1	2	1	2	1	2	1	2	1	2	1	2	1	2
19	Harvesting	10	15	11	10	3-row binder	1	1	2	2	*2	2	*2	2	3	3	4	4	3	3	3	3	6	6
20	Transport	10	15	11	10	Hand	0	4	0	4	0	4	0	4	0	5	0	8	0	4	0	5	0	12
21	Threshing	10	15	11	10	Thresher	1	4	2	8	2	8	2	8	3	12	4	16	2	8	3	12	6	24
22	Transport	10	15	11	10	Trailer	1	2	1	2	1	2	1	2	2	4	2	4	2	4	2	4	3	6
23	Drying	10	16	11	15	Dryer 2.7m³	2	1	*2	1	3	2	3	2	*4	2	6	2	*3	2	4	2	*8	2
24	Husking	10	16	11	15	Husker 75.0mm	1	3	1	3	1	3	1	3	1	3	2	6	1	3	1	3	2	6
25	Manure spread	10	16	12	30	Manure spreader	1	2	1	2	1	2	1	2	1	2	1	2	1	2	1	2	1	2
26	Straw treatment	11	16	12	30	Hand	0	2	0	2	0	2	0	2	0	2	0	4	0	2	0	2	0	4
Tractor (18 PS)						= MDAIMAX	1		1		1		2		2		2		3		3		3	
Laborer (max)						= MENMAX	4		8		8		8		12		16		8		12		24	
Coverage (ha)						= COVERMIN	2.8		3.8		4.1		4.1		5.8		8.1		4.8		5.8		11.4	
Cost of Machinery (kyen/ha)						= COSTMHA	826		766		771		857		829		776		912		891		764	
Calorie of Total System (Mcal/ha)						= CALSA	4184		3874		3918		4310		4210		3883		4568		4493		3865	

Note: ND = machine, MN = labour, * = critical farm operation

Table 3 Systems Analysis of LC Set Series

No.	Operation	Duration				Implement	LC10		LC11		LC20		LC21		LC22	
							ND	MN	ND	MN	ND	MN	ND	MN	ND	MN
1	Seed preparation	5	1	5	30	Hand	0	2	0	2	0	2	0	2	0	2
2	Seedling	5	5	5	30	Hand	0	2	0	3	0	3	0	4	0	4
3	Tillage	5	16	5	31	Rotary 170cm	1	1	1	1	2	2	2	2	2	2
4	Fertilizing	6	1	6	20	Hand	1	2	0	2	0	2	0	2	0	2
5	Puddling	6	1	6	20	Paddy harrow	1	1	1	1	1	1	1	1	2	2
6	Transport	6	1	6	20	Trailer	1	4	1	4	1	4	1	4	1	4
7	Transplant	6	1	6	20	Transplanter	1	2	1	2	1	2	1	2	2	4
8	Herbicide	6	6	25	25	Gra. applicator	1	1	1	1	1	1	1	1	1	1
9	Weeding	6	6	7	11	Hand	0	1	0	2	0	2	0	4	0	6
10	Pesticide	7	6	7	11	Power duster	1	2	1	2	1	2	1	2	1	2
11	Herbicide	7	21	7	25	G. applicator	1	1	1	1	1	1	2	2	2	2
12	Pesticide	7	21	7	25	Power duster	1	2	1	2	1	2	1	2	1	2
13	Pesticide	8	1	8	7	Power duster	1	2	1	2	1	2	1	2	1	2
14	Fertilizing	8	6	8	10	Hand	0	2	0	2	0	2	0	3	0	3
15	Pesticide	8	16	8	20	Power duster	1	2	1	2	1	2	1	2	1	2
16	Pesticide	8	16	8	20	Power duster	1	2	1	2	1	2	1	2	1	2
17	Pesticide	9	6	9	10	Power duster	1	2	1	2	1	2	1	2	1	2
18	Pesticide	9	6	9	10	Power duster	1	2	1	2	1	2	1	2	1	2
19	Harvesting	10	15	11	10	Combine	1	1	*1	1	2	2	2	2	2	2
20	Transport	10	15	11	10	Trailer	1	2	1	2	1	2	*1	2	2	4
21	Manure spreader	10	16	12	30	Manure spreader	1	2	1	2	1	2	1	2	1	2
22	Drying	10	16	11	15	Dryer 2.7m³	*3	2	4	2	*4	2	6	2	*7	2
23	Husking	10	16	11	15	Husker 75.0mm	1	3	1	3	1	3	1	3	2	6
24	Straw treatment	11	16	12	30	Hand	0	2	0	2	0	2	0	2	0	3
Tractor (36 PS)						= MDAIMAX	1		1		2		2		2	
Laborer (max)						= MENMAX	4		4		4		4		6	
Coverage (ha)						= COVERMIN	4.6		5.1		6.1		7.0		9.8	
Cost of Machinery (kyen/ha)						= COSTMHA	776		753		933		889		759	
Calorie of Total System						= CALSA	5322		5211		6145		5926		5233	

Note: ND = machine, MN = labor, * = critical farm operation

The cost of machinery per ha depends on the coverage, as shown in Fig. 1.

SB set was the most economical when the coverage was less than 1.7 ha.

MB set was the most economical when the coverage ranged between 1.7 and 3.8 ha and more than 5.1 ha up to 9 ha.

LC set was the most economical when the coverage ranged between 3.8 and 5.1 ha.

The most economical point corresponded to 753 kyen/ha for a coverage of 5.1 ha in the LC11 machinery set, because of the so-called scale merit.

Energy of machinery and fuel per ha depend on the coverage, as shown in Fig. 2.

SB set was the most effective in saving energy when the coverage was less than 1.7 ha and ranged between 2.8 and 3.5 ha, and between 4.1 and 6.6 ha.

MB set was the most effective in saving energy when the coverage

Table 4 Economic Analysis of Farm Operation of MB11 System

Title = Rice culture mechanization system
Sub-title = Varieties Nipponbare 30 x 15 cm : 22 hill/m² : 3-4/hill
Crop name = Rice
Varieties = Nipponbare
Tractor name = 18 PS tractor
Memorandum = RMB11
Area covered = 3.8 ha Wages per hour = 1000 yen/h
Yield = 4500 kg/ha Price of gasoline = 150 yen//

NSAGYO SA$ NKI SAG$ PRICEP NK ND MEN FCA TCCOVER ROTHA RLAT AHOUR CFIX VARCOSTRHA COSTMHA

No.	Operation	Machinery		Price kyen		set		Capacity ha/h	Area ha	Machine h/ha	Labor h/ha	h	Fixed kyen/ha	Variable kyen/ha	Tractor kyen/ha	Total kyen/ha
1	Seed prepa	0	Hand	0	0	0	2	0.33	3.89	0.00	3.75	14.14	0.0	3.8	0.0	3.8
2	Seedling	0	Hand	0	0	0	3	0.04	3.89	0.00	34.72	130.84	0.0	34.7	0.0	34.7
3	Tillage	1	Rotary	220	1	1	1	0.14	3.89	20.40	20.40	76.87	11.2	22.7	40.0	73.9
4	Fertilizing	0	Hand	0	0	0	2	0.20	4.26	0.00	6.25	23.55	0.0	6.3	0.0	6.3
5	Puddling	2	Paddy	350	1	1	1	0.66	4.26	8.59	8.59	32.36	17.8	9.1	16.9	43.7
6	Transport	3	Trailer	270	1	1	4	0.83	4.26	1.50	6.00	5.65	2.3	6.2	2.9	11.4
7	Transplant	4	Trans-plant	510	2	2	4	0.05	4.26	30.06	60.13	113.28	51.8	65.7	0.0	117.5
8	Harbicide	5	Gra. applic	60	2	1	1	0.37	4.26	3.53	3.53	13.31	1.5	3.5	0.0	5.1
9	Weeding	0	Hand	0	0	0	2	0.04	4.26	0.00	29.76	112.14	0.0	29.8	0.0	29.8
10	Pesticide	6	Power dust	80	2	1	2	2.40	4.26	0.57	1.14	2.15	0.6	1.3	0.0	1.8
11	Herbicide	5	G. ap-plicat	60	2	1	1	0.37	7.31	3.53	3.53	13.31	1.5	3.5	0.0	5.1
12	Pesticide	6	Power dust	80	2	1	2	2.40	7.31	0.57	1.14	2.15	0.6	1.3	0.0	1.8
13	Pesticide	6	Power dust	80	2	1	2	2.40	9.60	0.57	1.14	2.15	0.6	1.3	0.0	1.8
14	Fertilizing	0	Hand	0	0	0	2	0.20	9.60	0.00	6.25	23.55	0.0	6.3	0.0	6.3
15	Pesticide	6	Power dust	80	2	1	2	2.40	17.52	0.57	1.14	2.15	0.6	1.3	0.0	1.8
16	Pesticide	6	Power dust	80	2	1	2	2.40	17.52	0.57	1.14	2.15	0.6	1.3	0.0	1.8
17	Pesticide	6	Power dust	80	2	1	2	2.40	17.52	0.57	1.14	2.15	0.6	1.3	0.0	1.8
18	Pesticide	6	Power dust	80	2	1	2	2.40	52.56	0.57	1.14	2.15	0.6	1.3	0.0	1.8
19	Harvesting	7	3-row bind	450	2	2	2	0.09	3.77	16.96	16.96	63.90	45.7	19.7	0.0	65.4
20	Transport	0	Hand	0	0	0	4	0.04	3.77	0.00	29.07	109.54	0.0	29.1	0.0	29.1
21	Threshing	8	Thresh-ing	180	2	2	8	0.08	3.77	16.06	64.26	60.53	18.3	65.5	0.0	83.8
22	Transport	3	Trailer	270	1	1	2	0.17	3.77	7.49	14.97	28.20	11.4	16.0	14.7	42.1
23	Drying	9	Dryer 2.7m	850	2	2	1	0.02	*3.77	27.78	5.00	104.67	86.4	16.6	0.0	103.0
24	Husking	10	Husker 75.0	330	2	1	3	0.20	3.77	5.88	17.65	22.16	16.8	18.2	0.0	34.9
25	Manure spr	11	Manure spre	500	1	1	2	0.35	3.77	4.79	9.58	18.05	25.4	10.1	9.4	44.9
26	Straw trea	0	Hand	0	0	0	2	0.10	3.77	0.00	12.50	47.10	0.0	12.5	0.0	12.5
	Total			6961					3.77	150.57	360.89	294		388	84	766

Table 5 Economic Analysis of Machinery Set of MB11 System

MKI(I).MAC$(I).MDAI(I).PRICEM(I).FCAM(I).ROTHAM(I).FCHAM(I).CALFF(I).VARM(I).FIXM(I).COSTFM(I).COSTMM(I)

	Machinery	Set	Price purchase kyen	Field capacity ha/h	Service hour h/ha	Fuel consumption 1/ha	Fuel consumption Mcal/ha	Cost Variable kyen/ha	Cost Fixed kyen/ha	Cost Total kyen/ha	Cost TOTAL kyen
18	PS Tractor	1	1171	0.00	42.76	0.00	0.00	0.00	84	84	316
1	Rotary	1	220	0.14	20.40	21.11	9.48	22.73	11	34	128
2	Paddy harrow	1	350	0.66	8.59	4.57	38.87	9.09	18	27	101
3	Trailer	1	270	0.17	8.59	10.78	91.65	22.16	14	36	135
4	Transplanter	2	1020	0.05	30.06	28.41	207.39	65.66	52	118	443
5	G. applicater	1	60	0.37	7.06	0.00	0.00	7.06	3	10	38
6	Power duster	1	80	2.40	4.00	4.38	31.94	8.84	4	13	49
7	3-row binder	2	900	0.09	16.96	13.89	101.39	19.67	46	65	246
8	Threshing	2	360	0.08	16.06	12.05	96.39	65.51	18	84	316
9	Dryer 2.7m³	2	1700	0.02	27.78	111.11	888.89	16.56	86	103	388
10	Husker 75.0mm	1	330	0.20	5.88	5.00	40.00	18.17	17	35	132
11	Manure spread	1	500	0.35	4.79	4.31	36.64	10.05	25	35	134
	Hand without machine	0	0	0.00	122.31	0.00		122.31	0	122	461
	Total	0	6961	0.00	315.64	215.61	1712.63	387.83	378	766	2886

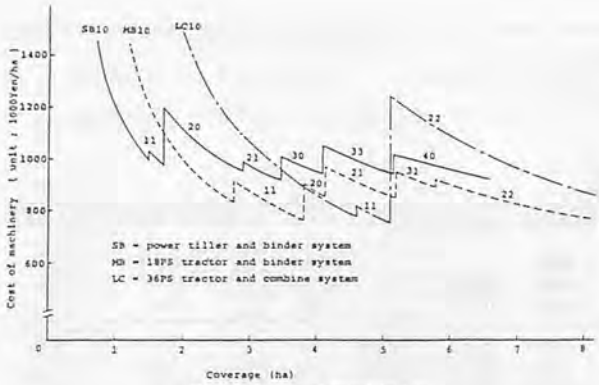

Fig. 1 Cost of machinery.

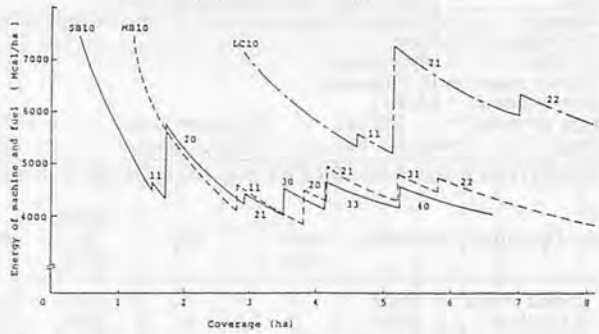

Fig. 2 Energy required for machine and fuel.

ranged between 1.7 and 2.8 ha and between 3.5 and 3.8 ha, and exceeded 6.6 ha.

LC set was not effective in saving energy, because of the increase of dryer fuel consumption compared to the scale merit.

Most energy saving point corresponded to 3 874 Mcal/ha for a coverage of 3.8 ha in the MB11 machinery set, and 3 865 Mcal/ha for a 11.4 ha coverage in MB32.

Examples of economic analysis of each farm operation and each machinery in detail are shown in **Tables 4** and **5**, which apply to the RM11 set.

The fixed cost and variable cost of the system were 294 and 388 kyen/ha, respectively, as shown in **Table 4**. The total price of machinery was 6 961 kyen, and cost of transplanter and dryer (kyen/ha) was higher than that of other machinery as shown in **Table 5**.

Conclusion

It was demonstrated that farm mechanization systems for rice cultivation in a certain area can be designed by using the planning program on a personal computer.

By calculating the area covered by a farm machinery set, this program pointed out the critical machinery or farm operation, which restricts the maximum coverage of the system, and showed that coverage could be improved by changing the capacity or number of marginal machines, increasing the number of laborers or prolonging the duration of the farm operation.

Also, the cost analysis of farm mechanization systems was shown in tables, enabling a comparison and selection of the optimal machinery sets and number of laborers for a certain cultivation area.

The cost of machinery per ha depended on coverage, as shown in **Fig. 1**.

Power tiller and binder system was most economical when the coverage was less than 1.7 ha.

The 18PS tractor and binder system was most economical when the coverage ranged between 1.7 and 3.8 ha and exceeded 5.1 ha up to 9 ha.

The 36PS tractor and combine system was most economical when the coverage ranged between 3.8 and 5.1 ha.

The most economical point corresponded to 753 kyen/ha for a 5.1 ha coverage in the LC11 machinery set, due to the so-called scale merit.

The energy of machinery and fuel per ha depended on the coverage, as shown in **Fig. 2**.

The power tiller and binder system was most effective in saving energy when the coverage was less than 1.7 ha and ranged between 2.8 and 3.5 ha, and between 4.1 and 6.6 ha.

The 18PS tractor and binder system was most effective in saving energy when the coverage ranged between 1.7 and 2.8 ha and between 3.5 and 3.8 ha, and exceeded 6.6 ha.

The 36PS tractor and combine system was not effective in saving energy, due to the increase in dryer fuel consumption compared to the scale merit.

Most energy saving point corresponded to 3 874 Mcal/ha for a 3.8 ha coverage in the MB11 machinery set, and 3 865 Mcal/ha for a 11.4 ha in the mB32.

Recommendation

This planning program was developed with BASIC on a personal computer, whose use is increasing year by year in many countries. Thus, it is easy and very convenient for agricultural officials or scientists to use this program in order to plan and design or analyse a farm mechanization system.

REFERENCES

Farm machinery catalogues, Shinnorin-sha(1982), (1983), (1984)

Central Agricultural Experiment Station: Studies on the Farm Operation Designing and Economic Evaluation, Ministry of Agriculture and Forestry of Japan (1969)

Konaka, T., Yuzawa, S. and Kuroishi, I.: Farm Mechanization Planning to Save Energy, Research on Effective Use of Energy in Agriculture: SPEY, p. 61-64 (1983)

Konaka, T., Yuzawa, S. and Kuroishi, I.: Farm Mechanization Planning Program, Report of Special Research Project on Tropical Agricultural Resources, 2 (1983)

ABSTRACTS

The ABSTRACT pages is to introduce the abstracts of the article which cannot be published in whole contents owing to the limited publication space and so many contributions to AMA. The readers who wish to know the contents of the article more in detail are kindly requested to contact the authors. The requests from the readers for publishing the whole contents among the articles introduced here may also be sent to editorial staff. Regarding the article of many requests, the publication of whole contents will be reconsidered.

Potential of Single-Animal Ploughing in Bangladesh: M.A. Jabbar, Assistant Professor, Dept. of Agric. Economics, Bangladesh Agricultural University, Mymensingh, Bangladesh.

In Bangladesh, single animal ploughing is practiced only in some parts of Sylhet district. This paper discusses the results of a survey showing causes of localized and restricted use of this technique. Only the buffalo plough was found to be technically and economically more efficient than the plough drawn by a pair of cattle. However, the expansion of the technique outside Sylhet seems to be restricted because draught buffaloes account for only about 2% of the total draught animals in the country.

Conjunctive Use of Irrigation Water in Nainital Bhabar, India: Radhey Shyam, H.S. Chauhan and Sewa Ram, Asst. Prof., Dean and Assoc. Prof., respectively, G.B. Pant Univ. of Agriculture and Technology, Pantnagar, Distt. Nainital, India.

A linear programming model aimed at maximizing the aggregated annual return from an area is presented. An optimal cropping pattern, matching the available land and water supplies against the existing agro-socio-economic and irrigation constraints has been recommeded. Three tubewell water supply levels with two canal water levels have been considered. Increase in irrigation water supply levels, in general, and during peak demand periods, in particular, results in increase in total return of the area selected for study.

Laboratory Studies on Spray Distribution Pattern of Wide-Swath Spray Boom: H.S. Bisen and N.S.L. Srivastava, Scientist S-1 and Scientist S-3, C.I.A.E., Bhopal, M.P., India.

The spray uniformity pattern of the tall-crop spraying system using IISR-wide swath spray boom was measured on the test setup by operating the system at 3.5kg/cm^2. The angle of rear and front nozzles of the spray boom were varied as 15, 20, 22, 25, 30 and 30, 35, 38, 40, 45 degrees. The nozzle tip opening was also adjusted at fully tight, one round and two-round open settings. A maximum uniform spray distribution is achieved at 22° rear nozzle angle with nozzle tip fully-tight and 38° front nozzle angle with one round open tip adjustment. These optimum nozzle positions at their respective tip setting gave a uniform swath of 8.5 m with a total coverage of 10.5 m swath width.

Manually-Made NRCC-Collared Pipes and Accessories for Underground Irrigation Systems: Ghanshyam Das and Avinash Agarwal, Professor (Agric. Engg.) and Jr. Res. Officer (Agric. Engg.), G.B. Pant Univ. of Agriculture and Technology, Pantnagar, U.P., India.

The procedure to manually manufacture cement concrete pipes and its accessories has been described. Design of moulds for pipes, Tee joints, manually driven vibrator, and riser valves have been described. These can be fabricated by Indian Village artisans and are economical.

Mathematical Model for Selecting Wheat Threshing Systems for Farms in North India: M.L. Gupta, Res. Fellow, Agric. Engg. Sec., Dept. of Civil Engg., Univ. of Melbourne, Parkville, Victoria, Australia; Gajendra Singh, Assoc. Prof. and Chairman, Div. of Agric. and Food Engg. Asian Institute of Technology, Bangkok, Thailand; P.K. Gupta, Asst. Prof. .Dept. of Farm Power and Machinery, Punjab Agric. Univ., Ludhiana, India.

This paper describes a mathematical model which selects an optimum wheat threshing system depending upon the crop area and the power source used on the farm. A computer program written in FORTRAN IV language computes the optimum size of wheat thresher for a given crop area and power source; fixed, operating, timeliness and total cost of threshing; custom work, if required; system hours; system cost and least cost threshing system. The utility of this programme is demonstrated in selecting least cost threshing systems for farms growing wheat up to 20 hectares in Punjab, India. ■■

EIMA – International Agricultural Machinery Manufacturers Exhibition
Nov. 11-15, 1987, Bologna, Italy

EIMA, promoted and organized directly by UNACOMA, the Italian Association of agricultural and earth-moving machinery manufacturers, has, over the years, maintained unchanged its professional character. The absence of company advertising, admission reserved exclusively to manufacturers, access to the general public limited to the last two days, division of the exhibited manufacture into product groups, well-run facilities to support and assist both exhibitors and visitors: this, in synthesis, is the formula which has, year after year, multiplied the success of EIMA.

EIMA represents the appointment which must not be missed for those – ranging from the Italian and foreign industry of agricultural mechanization and gardening to the economic, technical and agricultural dealers and businessmen – whose livelihood is in this sector at whatever level.

XVIII EIMA, Bologna, fair centre of the Ente Autonomo Fiere of Bologna; total area 250,000 m², exhibition area in covered and heated pavilions for 92,000 m², meeting rooms of all sizes; logistic and interpreter services, press service, business centre for encounters and information.

For further information contact:
EIMA-00161 Roma
Via Lazzaro Spallanzani, 22/a

AGROPHIL 87
November 4-8, 1987, Manila, Philippines

The 1st International Agro Equipment/Technology Exhibition and Conference is scheduled to be held in Manila, The Philippines, from 4 to 8 November 1987. In terms of cropped area, the Philippines is the second largest agricultural country in Asia, just after The People's Republic of China. In terms of the low level of technology and agricultural mechanization, it is the next largest potential market in the area which relys heavily on foreign supplies of equipment and technology.

Government's plans have to be supported by the introduction of new equipment and advanced technologies. AGROPHIL 87 is the first international exhibition of its kind ever held in the country. The event is organized in accordance with the Aquino Government's policy to improve economy through agricultural development.

Besides the Department of Agricultural & Food which will bring attendants from all provinces through its mechanism of all local agencies, AGROPHIL 87 is also sponsored by Philippine's Ministry of Trade & Industry (MTI). The MTI will organize concurrent seminars on foreign investment opportunities in Philippines agribusiness, investment incentives, coproduction in agri-production, joint-ventures, technology transfer, licensing, joint-manufacturing of foreign agri-products with local manufacturers/operators, and etc. The MTI's board of investment will also organize observation and technical tours to bring interested foreigners to various agribusiness establishments which are opened for foreign participation.

For details contact the organizer:
AVP Expositions Co., Ltd.
1201 Nan Fung Center
264-298 Castle Peak Road
New Territories, Hong Kong

Middle East Agriculture 87
2nd Agriculture, Irrigation and Agri-Industry Show for the GCC States
November 8-12, 1987
Dubai International Trade Centre
United Arab Emirates

The show has attracted substantial interest and commitment from companies, trade associations and governments worldwide. National group participations are already confirmed from Australia, Britain, Canada, Denmark, Hungary, Italy and the Netherlands. Other national groups, together with individual exhibitors, are expected from Austria, Belgium, France, F.R. Germany, Pakistan, Romania, Spain, Yugoslavia and the USA as well as Saudi Arabia, Oman and the United Arab Emirates. Middle East Agriculture 87 will offer international manufacturers and suppliers of agricultural and related products the best opportunity to reach the total agricultural market of the Arab Gulf States.

Agricultural chemicals, fertilizers and feedstuffs have been particularly in demand and this demand has been largely met by producers in Western Europe with West Germany securing a US$ multimillion share of the market.

Demand for tractor spares has also been rising and the call for irrigation pumps is increasing at a substantial rate.

For further details contact:
Liz Curtis
Overseas Exhibition Services Ltd.
11 Manchester Square
London W1M 5AB, U.K.

INQUIRY and REQUEST to AMA

Please let us know your need. We shall promptly reply them. Inquire on any catalog listed in the advertisement in this issue. We shall try our best to serve you. We welcome articles of interest to agricultural mechanization.

Fill in the reverse side of this card and send us by sealed letter.

FARM MACHINERY INDUSTRIAL RESEARCH CORP.

7-2 Kanda Nishikicho Chiyoda-ku Tokyo-Japan 101

ADVERTISED PRODUCTS INQUIRY

Product	Advertiser	Vol., No., Page

EDITORIAL REQUEST TO AMA

Your Name :

Address :

Occupation :

SUBSCRIPTION/ORDER FORM

AGRICULTURAL MECHANIZATION IN ASIA, AFRICA AND LATIN AMERICA (AMA)

Issued Quarterly

Subscription Rate (includes surface mail postage)

Annual (4 issues) ----------¥.6,000
Single copy ----------¥.1,700

Back Issues (1971−75, ¥.2,000 per copy)
(1976−77, ¥.1,200 per copy)
(1978−80, ¥.1,500 per copy)

★Spring, 1971	☐Vol.7 No.2, Spring, 1976	☐Vol.9 No.4, Autumn, 1978
☐Vol.2 Autumn, 1971	☐Vol.7 No.3, Summer, 1976	☐Vol.10 No.1, Winter, 1979
☐Vol.3 No.1, 1972	☐Vol.7 No.4, Autumn, 1976	☐Vol.10 No.2, Spring, 1979
☐Vol.3 No.2, Summer, 1972	☐Vol.8 No.1, Winter, 1977	☐Vol.10 No.3, Summer, 1979
☐Vol.4 No.1, Spring, 1973	☐Vol.8 No.2, Spring, 1977	☐Vol.10 No.4, Autumn, 1979
☐Vol.4 No.2, Autumn, 1973	☐Vol.8 No.3, Summer, 1977	★Vol.11 No.1, Winter, 1980
☐Vol.5 No.1, Summer, 1974	☐Vol.8 No.4, Autumn, 1977	☐Vol.11 No.2, Spring, 1980
☐Vol.6 No.1, Spring, 1975	☐Vol.9 No.1, Winter, 1978	☐Vol.11 No.3, Summer, 1980
☐Vol.6 No.2, Autumn, 1975	☐Vol.9 No.2, Spring, 1978	☐Vol.11 No.4, Autumn, 1980
☐Vol.7 No.1, Winter, 1976	★Vol.9 No.3, Summer, 1978	★: Indicates issues out of stock.

☐ **Abstract and Index, 1971-80 (Special Issue, 1983)**

(Check issues and number of copies you wish to order)

Back Issues from 1981, ¥.1,700 per copy (Vol. 12 No. 1 and No. 4 are out of stock)

Abstract and Index, Special Issue, 1983, ¥2,000 per copy.

Vol._____ No._____, _____ 19_____, _____ copy/copies

(check one)

☐ Please invoice me/us

☐ I/We enclose remittance for ¥_____

****

Name: _____

Firm: _____

Position: _____

Address: _____

(block letters)

FARM MACHINERY INDUSTRIAL RESEARCH CORP.

7, 2-chome, Kanda Nishikicho, Chiyoda-ku,

Tokyo 101 Japan

Tel. (03)−291−3671~4, 5718

STAMP

FARM MACHINERY INDUSTRIAL RESEARCH CORP.

7, 2-CHOME, KANDA NISHIKICHO, CHIYODA-KU
TOKYO, 101 JAPAN

1st FOLD HERE

2nd FOLD HERE

NEW PRODUCTS

Case IH
Four New 200 Series Tractors

Case IH introduces four new 200 Series tractors in the under-40 hp range, able to tackle a wide variety of smaller-scale applications with power and ability. These compact, versatile tractors, with PTO horsepowers of 15.2 to 27 (11.3 to 20.1 kW) are designed to help the part-time farmer get the most out of his acres, to help the specialty-crops grower work quickly and the turf-care specialist to perform more satisfactorily in year-round estate and general grounds keeping.

All models have newly-designed control system, a lighted dash panel with electric gauges for late evening operation, comfortable contoured seats and an expanded selection of agricultural and turf tire sizes compared to previous Case IH tractors of this category.

Easy-to-install attachments include cultivators; side-, rear- and front-mounted mowers; snow throwers; blades and loaders.

Model No.	Engine
275	23.3 kW
255	18 kW
245	15.8 kW
235	13.5 kW

These easy-to-operate, full-featured tractors are also scaled down to operate in areas with too little space for a full-size farm tractor.

Case IH
Cotton Pickers Models 1822 and 1844

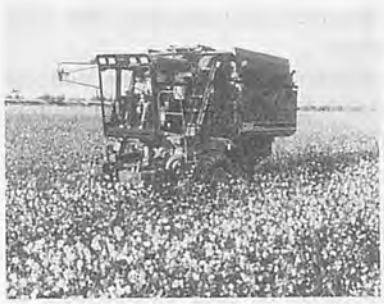

The new models were designed to meet very specific design changes requested by cotton growers, including: improved machine and picking efficiency; increased reliability; and lower overall harvesting costs.

The most revolutionary feature on the Models 1822 and 1844 is a new concept unloading system. Instead of tilting the basket and relying on gravity to dump it, the models feature power-metered unloading.

The new "induced air" cotton conveyor system provides the capacity to handle the heaviest yields at full picking speeds in the most demanding field conditions.

Other features: faster picking speed (5.63 km/h); all-gear drum drive power train with no belts for easy maintenance; large 7636 cc engines delivering 150 hp on the Model 1822 and 215 hp on the Model 1844; larger baskets – a 21 m^3 basket holding up to 1996 kg of cotton on the Model 1822 and a 33 m^3 basket holding up to 3175 kg on the Model 1844; roof-mounted, press-type compactor ensuring full baskets with each load; standard pressurized moistener system; and state-of-the-art operator environment controls.

For further information contact:

Case IH: 700 State Street, Racine, WI 53404, U.S.A.

Skifter Elektronic ApS Presents "The Farmer's multimeter M 900"

The farmer or the merchant can quickly and accurately measure the moisture percent in all types of crops.

Furthermore, the M 900 can measure the moisture content in all grain types: soya, peanuts, coffe, rice, coco etc.

One of the advantages of the new M 900 is that it can measure the moisture percent in all types of seeds.

M 900 has a digital display, an automatic battery level indicator and shockproof aluminium casing.

Accessories: The thermometer is able to measure temperatures up to 100°C up to distance of 100 m; The Hygrometer can measure air humidity from 20% to 95% RH; The remote moisture probe indicator is especially developed for measuring moisture in hops and all crops in sacks.

The M 900 cost less than US$500.

For further information contact:

Skifter Elektronic ApS.
Hellet 55, 5700 Svendborg
Denamrk

BOOK REVIEW

100 Bankable Post Harvest Equipment Developed in India

(India)

by R.P. Kachru, P.K. Srivastava, B.S. Bisht and T.P. Ojha

The publication is a compendium of information on equipment designed/developed, tested and released by various research organizations and universities on the area of post harvest engineering during the last two decades. In this publication, the equipment for various unit operations in post harvest technology have been grouped under 10 categories, viz; Cleaners and Graders; Driers and Dehydrators; Stabilizers and Heat Treaters; Storage Structures; Milling, Decortication and Dehusking Equipment; Extracting Units; Strippers and Seed Treaters; Milk and Milk Product Processing Units; Bullock Carts; and Miscellaneous Equipment. Each equipment has been provided with specifications, test results, economic analysis and salient features along with an illustration.

Bankability of these equipment have been decided through a number of parameters (either singly or in combination), viz; working capital requirement, cost of operation, break-even-point, net profits, return-on-investment and employment generation per unit of capital investment. These economic parameters for each equipment, wherever possible, have been determined for four different operational conditions, namely; purely custom-based, 50% custom-based and 50% selling, purely selling and for own use. With this analysis, it was possible to precisely indicate the bankability of each hardware and then come out with a list of 100 such equipment. Additional information regarding research and development organizations, manufacturers and suppliers and journals and magazines covering post harvest equipment in India have also been given.

It is believed that the publication will be useful to manufacturers for mass production of appropriate equipment suiting to agro-climatic conditions and need of their areas, the rural processor and farmers for selecting matching gadgets for operation on their own produce as well as for small scale business operations. The publication will also be useful to developmental organizations in popularising the post harvest operations for agriculture based materials which, in turn, will increase the economic returns of a farmer/processor/manufacturer. The equipment listed in the publication will also be of a great help to developing countries towards development of their agro-based rural processing industries.

Size: 278 pp, soft bound

Price: US$ 30.00

Published by Central Institute of Agricultural Engineering, Nabi Bagh, Berasia Road, Bhopal-462018, M.P., India

Proceedings on National Seminar-cum-Workshop on Experimental Plot Machinery for Agricultural Research

(India)

Edited and compiled by B.G. Yadav

The Central Institute of Agricultural Engineering, Bhopal organized a two-day national seminar-cum-workshop on experimental plot machinery for agricultural research and published its proceedings during 1985. It was the second regional IAMFE conference on mechanization of field experiments.

The proceedings consists of technical papers and discussions from the various national and international bio-scientists, engineers and agricultural research machinery manufacturers involved in agricultural research mechanization. The proceedings consists of the recommendations of each of the five technical sessions through 29 technical papers on the subjects and recommendations of the plenary session on agricultural research mechanization policy.

Size: 20 x 28 cm, 292 pp, loose-bound cover

For further details contact; Director, Central Institute of Agricultural Engineering, Nabi Bagh, Berasia Road, Bhopal - 462 018, India.

Mechanics of Agricultural Materials

(Netherlands)

by G. Sitkei

The importance of economical production of agricultural materials, especially crops and animal products serving as base materials for foodstuffs, and of their technological processing (mechnical operations, storage, handling etc.) is ever-increasing. During technological processes agricultural materials may be exposed to various mechanical, thermal, electrical, optical and acoustical (e.g. ultrasonic) effects. To ensure optimal design of such processes, the interactions between biological materials and the physical effects acting on them, as well as the general laws governing the same, must be known.

The mechanics of agricultural materials, as a scientific discipline,

is still being developed, and therefore has no exact methods as yet, in many cases. However, the methods developed so far can already be utilized successfully for designing and optimizing machines and technological processes.

This present work is the first attempt to summarize the calculation methods developed in the main fields of agricultural mechanics, and to indicate the material laws involved on the basis of a unified approach, with all relevant physico-mechanical properties taken into account.

The book deals with material properties, gives the necessary theoretical background for description of the mechanical behaviour of these materials including modern powerful calculation methods and finally discusses a large number of experimental results. Many of them can only be found in this book. Special attention is paid to the unified approach concerning theory and practice.

The systematic treatment of the material makes the book useful to a wide circle of designers, researchers and students in the field of agricultural engineering. The book can also be used as a textbook at technical and agricultural universities.

Size: 24.5 x 17 cm, 487 pp, hard cover

Price: US$144.50/Df1.325.00

Published by Elsevier Science Publishers P.O. Box 211, 1000 AE Amsterdam, The Netherlands

In USA/Canada Order from: Elsevier Science Publishing Co. Inc., P.O. Box 1663 Grand Central Station, New York, NY 10163

An Illustrated Guide to Integrated Pest Management in Tropical Asia (Philippines)

by W.H. Reissig, E.A. Heinrichs, J.A. Litsinger, K. Moody, L.Fiedler, T.W. Mew, and A.T. Barrion

This book contains well-balanced, authoritative, readily applicable information that ranks it as one of – if not the – most usable and pertinent crop protection works ever printed.

Published in 1985 by the International Rice Research Institute (IRRI) based on a draft first written in 1979-80, the Guide promptly offers a rational definition for the oft-misunderstood integrated pest management. IPM, the text notes, "is a strategy or plan that utilizes various tactics or control methods–cultural, plant resistance, biological, and chemical –in a harmonious way."

The seven principal authors have drawn important support from IRRI's vast and capable publications design group. The line drawings, charts, and technical illustrations truly are the heart of the publication and very nearly could stand alone. The illustrations are crisp, accurate, and happily devoid of the cutesy cartoonitis that afflicts several other less professional attempts at pest management publishing. In fact, the IRRI publication is designed to be co-published in other languages, and doubtlessly will be.

Individual sections address insects, weeds, diseases, and rodents. Subsections deal with identification, pest-caused symptoms, and methods of control. A short section presents ideas for pest management strategies, followed by a glossary.

Large format, 411pp, softbound

For details inquire from Communications Department, IRRI, P.O. Box 933, Manila, Philippines.

Design in Agricultural Engineering (U.S.A.)

by L.L. Christianson and Roger P. Rohrbach

Turning your technical engineering expertise into professional engineering expertise is the thrust of this new reference textbook aimed at the prospective engineer, the engineering instructor and the practicing engineer who wants to sharpen his/her skills in the workplace or marketplace.

Topics include defining the creative problem, scheduling design activity and estimating cost, considering safety and ethics in design, standardizing for manufacturing consideration, testing and evaluation, selling the company or marketplace on your ideas, arranging for patents and trademarks, working with engineering and non-engineering colleagues, and balancing work schedules with personal time.

This vital yet lighthearted text/reference book contains not only a great deal of sound practical philosophy, but also over 75 graphs, charts and reproducible forms for daily use in your engineering program.

Size: 23.5 x 16 cm, 312 pp, hard bound

Price: US$29.50 plus $1.50 for postage and handling

Published by the American Society of Agricultural Engineers 2950 Niles Road, St. Joseph Michigan, 49085-9659, U.S.A. ■■

Co-operating Editors

J G Van Lancker | G B Hanna | A Kandiah | D B Ampratwura | M S Choudhury | J C Igbeka | E U Odigboh | K C Oni | N G Kuyambeh | A H Abdoun

A B Saeed | N C Saxena | I de A Nääs | A L Phillips | A A Valenzuela | A H Mirdha | W J Chancellor | M L Esmay | M R Goyal | K P Srivastava

— AFRICA —

Julien G. Van Lancker
Professor Visitor (Agricultural Engineering), University of Brundi, Brundi

George B. Hanna
Chairman, Agricultural Engineering Dept., College of Agriculture, Cairo University, Giza, Cairo, Egypt.

Arumugam Kandiah
Institute of Agricultural Research, P.O. Box 2003, Addis Ababa, Ethiopia.

David Boakye Ampratwum
Part-Time Lecturer, Agricultural and Food Engineering, University of Ghana, Legon, Ghana.

Md. Shahansha Uddin Choudhury
Professor of Agricultural Engineering, University of Sokoto, P.M.B. 2346, Sokoto State, Nigeria

Joseph Chukwugozium Igbeka
Associate Professor, Dept. of Agricultural Engineering, Faculty of Technology, University of Ibadan, Ibadan, Nigeria

E.U. Odigboh
Professor & Head of Agricultural Engineering Department, University of Nigeria, Nsukka, Nigeria

Kayode C. Oni
Senior Lecturer, Dept. of Agricultural Engineering, University of Ilorin, P.M.B. 1515, Ilorin, Nigeria

N.G. Kuyembeh
Dean, Faculty of Agriculture and Head, Dept. of Agric. Engineering, Njara University College, University of Sierra Leone, Sierra Leone

Abdien Hassan Abdoun
Director General Administration for Engineering, Ministry of Agric., F & NR., Khartoum, Sudan (c/o Syrian Arab Republic, Technical Assistance to Agric. Investment in the Southern Region Farm Machinery & Mechanics Training Center at DARAA, P.O. Box 10709, Damascus, Syria)

Amir Bakheit Saeed
Lecturer, Dept. of Agricultural Engineering, Faculty of Agriculture, University of Khartoum, Khartoum, Sudan

Naresh Chandra Saxena
Contract Officer, Dept. of Agricultural Engineering and Land Planning, Sokoine University, P.O. Box 3003 Morogoro, Tanzania

— AMERICAS —

Irenilza de Alencar Nääs
Professor, Agricultural Engineering College, UNICAMP, Agricultural Construction Dept., P.O. Box 6011, 13081 — Campinas — SP., Brazil

Abdelkader Elmetwally Ghaly
Associate Professor, Agric. Engineering Dept., Faculty of Engineering, Technical University of Nova Scotia, Halifax, Nova Scotia, Canada

A.A. Valenzuela
Head, Agricultural Engineering Department, University of Conception, Chillan, Chile

Armed Hossain Mirdha
Professor and Head, Agricultural Production Area, Centre of Research in Agricultural and Livestock Sciences, Sierra Unit, Autonomous University "Juarez" of Tabasco, Apdo. Postal-960, Admon. de Correos No2 C.P. 86100 Villahermosa, Tabasco, Mexico

William J. Chancellor
Professor, Agricultural Engineering, University of California, Davis, California 95616, U.S.A.

Merle L. Esmay
Professor, Agricultural Engineering, Michigan State University, East Lansing, Michigan 48823, U.S.A.

Megh Raj Goyal
Associate Agric. Engineer, Fruits Substation, HC-02 — Box 7115, Juana Diaz, PR, 00665-9601 U.S.A.

Krishna Prakash Srivastava
CFTC Expert, Agrkc. Engineer (Soil and Water). Caribbean Agric. Research and Development Institute, Friars Hill, P.O. Box 766, St. John's, Antigua (W.I.)

— ASIA and OCEANIA —

Shah M. Farouk
Professor, Dept. of Farm Power & Machinery, Bangladesh Agricultural University, Mymensingh, Bangladesh

Mohammed A. Mazed
Chief Scientific Officer & Head of Agricultural Engineering Div., Bangladesh Agricultural Research Institute, Joydebpur, Dhak, Bangladesh

Manbahadur Gurung
Horticulture Extention Officer, Ministry of Development, Dept. of Agriculture, HA Bhutan P.O.HAA, Bhutan

Wang Wanjun
Chief Engineer and Vice Director of the Chinese Academy of Agricultural Mechanization Sciences, No.1 Beishatan, Deshengmen Wai, Beijing, China

Satish Chandra
Assistant Director of Agriculture, Korónivia Research Station, Ministry of Agriculture and Fisheries, P.O.Box 77, Narsori, Fiji

A.M. Michael
Director, Indian Agricultural Research Institute, New Delhi 110012, India

S.R. Verma
Dean, College of Agricultural Engineering, Punjab Agric. University, Ludhiana 141004, India

Soedjatmiko
Head of Subdirectorate of Agricultural Engineering, Ministry of Agriculture, Jakarta , Indonesia

Jun Sakai
Professor, Dept. of Agricultural Engineering, Faculty of Agriculture, Kyushu University 46-05, Hakozaki, Higashi-ku, Fukuoka 812, Japan

Bassan A. Snobar
Associate Professor, Faculty of Agriculture, University of Jordan, Amman, Jordan

Chang Joo Chung
Professor, Dept. of Agricultural Engineering, College of Agriculture, Seoul National University, Suweon, Korea

S M Farouk | M A Mazed | M Gurung | Wang Wanjun | S Chandra | A M Michael | S R Varma | Soedjatmiko | J Sakai | B A Snobar

C J Chung

Imad Haffar

M Z Bardaie

B K Shrestha

M Afzal

A D Chaudhry

M S Chaudhry

B T Davrajani

A A Mughal

Surya Nath

R M Lantin

C C Lee

R P Venturina

M H A Aziz

S Illangantileke

S Kathir-kamathamby

G Singh

Y Pinar

A P Kaloyanov

T T Pedersen

G Pellizzi

A Moens

J Kilgour

Imad Haffar
Assistant Professor of Agricultural Mechanization, Dept. of Soils, Irrigation and Mechanization, Faculty of Agriculture and Food Sciences, American University of Beirut, Beirut, Lebanon

Muhamad Zohadie Bardaie
Associate Professor, Faculty of Agricultural Engineering, University of Agriculture Malaysia, Serdang, Selangor, Malaysia

Bala Krishna Shrestha
Agricultural Engineer, 4/141, Pulchowk Behind the Fire Brigade, Lalitpur, Nepal

Mohammad Afzal
Senior Engineer (Mechanization Engineer), Farm Machinery Institute, National Agric. Research Centre P.O. NIH, Islamabad, Pakistan

Allah Ditta Chaudhry
Associate Professor and Chairman of the Department of Farm Machinery and Power, University of Agriculture, Faisalabad, Pakistan

Muhammad Siddique Chaudhry
280 Roger Williams Ave #35 East Providence, R.I. 02916, U.S.A.

Bherulal T. Devrajani
Principal Investigator, Sind Agricluture University, Tandojam, Sind, Pakistan

A.Q. Mughal
Professor & Dean, Faculty of Agricultural Engineering, Sind Agriculture University, Tandojam, Sind, Pakistan

Surya Nath
Lectuer II (Agricultural Engineering) Dept. of Agriculture, University of Technology, Lae, Papua New Ginea

Reynaldo M. Lantin
Dean, Institute of Agricultural Engineering and Technology, University of the Philippines at Los Baños, College, Laguna 3720, Philippines

Chul Choo Lee
Project Engineer, Projects Department Asian Development Bank, P.O.Box 789, Manila, Philippines

Richardo P. Venturina
Assistant Scientist for Agricultural Research, National Science Development Board, P.O.Box 3596, Rizal, Manila, Philippines

M.H. Abdel Aziz
Professor of Irrigation Engineering and Head, Agricultural Engineering Dept., Riyadh Univ., Saudi Arabia

S. Illangantileke
Head, Department of Agricultural Engineering, Faculty of Agriculture, University of Peradeniya, Sri Lanka

Suppiah Kathirkamathamby
Head, Agricultural Engineering Research and Development Division, Dept. of Agriculture, Peradeniya, Sri Lanka

Gajendra Singh
Professor of Agricultural Engineering, Asian Institute of Technology, Bangkok, Thailand

Yunus Pinar
Assistant at Agricultural Engineering Department, Atatürk University, Erzurum, Turkey

-- EUROPE --

Anastas Petrov Kaloyanov
Professor & Head of the Research Laboratory on Farm Mechanization, Higher Institute of Economics, Sofia, Bulgaria

T. Touggaard Pedersen
Professor, Agricultural Engineering at the Royal Veterinary and Agricultural University, Copenhagen, Denmark

Giuseppe Pellizzi
Professor, Institute of Agricultural Machinery, University of Milano, Via G. Celoria 2—20133 Milano, Italy

Adrian Moens
Professor & Head, Dept. of Agricultural Engineering, Agricultural University, Dr. S.L. Mansholtlaan 12, Wageningen, Netherlands

John Kilgour
Lecturer in Engineering Drawing and Design, National College of Agricultural Engineering, Silsoe, Bedford, MK45 4DT, U.K.

BACK ISSUES

(Vol. 17 No. 1, Winter 1986~)

AGRICULTURAL MECHANIZATION IN ASIA, AFRICA AND LATIN AMERICA (Vol. 17, No. 1. Winter, 1986)

Editorial (Y. Kishida) 9
Problems of Agricultural mechanization in Developing Countries (A. Gego) 11
Performance of Power Tiller Blades (J.M. Baloch, J. Kilgour, S.B. Bukhari, A.Q.A. Mughal) 22
The Combi-Plough—An Animal-Drawn Implement System in Kenya (H.C.P de Vries, O.J.T.M de Weert) 27
Tractor-Drawn Combination Tillage Tool (V.J.F. Kumar, R. Manian) . . 31
Float Harrow and its Performance (P. Dutt, B.C. Parida, A.K. Choudhury) 37
Groundnut Crop Moisture Content and Rotor Speed in Stripping (S. Thangavelu, K.R. Swaminathan) . . 39
Field Investigation on the Direct Seeding of Coated Rice in Thailand (M. Koike, V. Manthamkan, K. Agarwalla, L. Ganjoo) 42
Performance and Vibration Control of Tractor-Mounted Oscillatory Potato Digger (A.P. Sharma, S.R. Verma) 47
Improvement of Manually-Operated Water Lifting Device (M. Ahmed, C.M.A. Khan) 51
Analysis of Forces Acting on Mole Plough in Mole Drainage Practice (R. Malik, P.B. Harrison, M. S. Soomro, G.A. Shah) 55
Hill Land Mechanization in Puerto Rico (E.J. Ravalo, F.R.R. Negron, M.R. Goyal, C. Almodovar) 59
Graphical Determination of Cost of Operation on Agricultural Machines (M.M. Pandey, T.P. Ojha) 63
Optimization of Machinery Systems (E.J. Hetz, M.L. Esmay) 68
Agricultural Machinery and Implements Industry: Problems and Status Quo (M.A. Sargana, S.I. Ahmad, J. Kishwer) 77
A Moral Story Handed Down in Europe (Tanoue) 81
News 83
New Products 84
Book Review 85

◇ ◇ ◇

AGRICULTURAL MECHANIZATION IN ASIA, AFRICA AND LATIN AMERICA (Vol. 17, No. 2, Spring, 1986)

Editorial (Y. Kishida) 9
A Pole-Drawn Toolbar for Animal Traction (J.W. Dogger, M. Kersten) . . . 11
Zero-Tillage in Wheat Crop under Heavy Soils (S.D. Dhiman, A.P. Sharma) 15
Economic Evaluation of Tillage Operations in Some Mechanized Farms in Nigeria (J.C. Igbeka) . . . 17
Work Capacities and Fuel Consumptions of Hand Tractors Manufactured in the Philippines (C.J. Ancheta, R.C. Bautista) 23
Photoelastic Investigations for Stresses Due to Soil-Tillage Disc Tool Interaction (R.N.S. Yadav, C.P. Gupta, B. Pradhan) 27
Seed Distribution Performance of the Furrow Openers Used on Drill Machines (A. Özmerzi) 32
Design, Construction and Performance of a Manually-Operated Seeding Attachment for an Animal-Drawn Cultivator (K. Kumar, N.K. Naresh, T.P. Ojha) 35
Some Fundamentals of Electrostatic Spraying (Md. D. Hussain, E. Moser) 39
Irrigated Agriculture: Making the Most of Available Resources (J.O. Duru) 46
An Improved Cutting and Bunching Machine for Harvesting Grain Crops in Bangladesh (Md. M.R. Mollah, J. Kilgour) 49
Large-Scale Drying System for Paddy (Z. Sheng-yu) 55
Improved Nomographs for Estimating Efficiency and Capacity of Agricultural Field Operations (H. Lal) . . . 57
Mathematical Model for Selecting Wheat Threshing Systems for Farms in North India (M.L. Gupta, G. Singh, P.K. Gupta) 61
Agricultural Mechanization Facilities in Sind, Pakistan (A.A. Channar, B.T. Devrajani, A.Q.A. Mughal, S.B. Bukhari) 68
Comparison of USA and Japanese Agricultural Mechanization Models (F.S. Sial) 71
Indigenous Production of Agricultural Machinery in Pakistan (M.A. Sargana, A.P. Chaudhary, Md. Afzal) 75
Abstract 79
News 81
New Products 82
Book Review 84

◇ ◇ ◇

AGRICULTURAL MECHANIZATION IN ASIA, AFRICA AND LATIN AMERICA (Vol. 17, No.3, Summer, 1986)

Editorial (Y. Kishida) 9
Soil Bin Studies of Tillage-Line Forces (J. Md. Baloch, S.B. Bukhari, B. Koondhar, A.A. Channer, A.N. Mirani) 11
Drilling of Pelleted Paddy Seeds in Puddled Field (K.T. Maru, S.C.B. Siripurapu) 15
Optimum Composition of Rubber Rolls for Paddy Shellers (R.P. Misra, C.P. Gupta, S.K. De) 19
Storability and Germination of Pre-Harvest Desiccated Paddy (P. Pillaiyar, S. Sethuraman, M. Nagarajan, R. Vaidhyalingam) 23
Simple and Low Cost On-Farm Paddy Dryer (K. Uyeda) 27
Mechanization of Paddy Cultivation in West Malaysia (G. Singh, L.C. Kiong) 32
Losses of Rice During Milling in Commercial Rice Mills of Sri Lanka (W.V. Jayasena, S.G. Ilangantileke) 37
Mechanization of Small Farms in Tropical Africa (N.G. Kuyembeh) 41
Agricultural Mechanization as a Catalyst for Rural Development (U.G.N. Anazodo) 47
Influence of Natural Resources on Agricultural Mechanization (N.H. Laghari, A.Q.A. Mughal, B.T. Devrajani) 53
Intensity of Tillage Operation in Bangladesh (Md. S. Uddin, Md. R.I. Sarker) 57
Design, Development and Field Evaluation of a Oscillatory Potato Digger (A.P. Sharma, S.R. Verma, A.S. Bansal) 60
Maintenance of Tree-Crop Plantations Using a Portable Motorized Weeder (L.O. Fawole, A.A. Agboola) 63
Agricultural Structure Problems in Tropical Countries (I. de A. Nääs) . 67
Delivery System for Farm Machinery Technology in India (G. Singh, T. Ojha) 72
Abstract 59
News 81
New Products 83
Book Review 85

◇ ◇ ◇

AGRICULTURAL MECHANIZATION IN ASIA, AFRICA AND LATIN AMERICA (Vol. 17, No. 4, Autumn, 1986)

Editorial (Y. Kishida 9
Studies on Evolutional Steps for Plowing and Tractorization in Japan (J. Sakai, S. Phongsupasamit, T. Kishimoto) 11
Effect of Restrained Linkage-Geometry on Tractor Performance (J.M. Baloch, S.B. Bukhari, A.Q.A. Mughal, A.N. Mirani) 20
Animal Draught: A Source of Power for Agricultural Development in a Developing Country (A. B. Fashina, J.C. Igbeka) 25
Draught Animal Power Potential in North-Eastern Hill Region of India (S.D. Sahu) 29
A Simple Recorder for Monitoring Irrigation Water Flow (T.B.S. Rajput) 32
Factors Affecting Choice and Use of Tillage Implements: Pakistan Setting (K.A. Hussain, H. Md. Munir) . . 35
Factors Influencing Threshability of Maize in Nigeria (K.C. Oni, M.A. Ali) 39
Needs and Availability of Agricultural Machinery in Chile (E.J. Hetz) 45
Farm Mechanization in Turkey (A. Özmerzi, B. Gökçebay) 49
Agricultural Engineering Potential in Caribbean Basin (M.R. Goyal) . . . 51
Useful Gadgets for Manufacture of Low-Cost Agricultural Machinery (S.R. Verma, J. Singh) 59
Performance and Tomato Yield in Cooled Greenhouse at Al-Hassan, Saudi Arabia (A.M. Abdalla, G.M. Al-Hassan, A.S. Al-Ghamdi, K.A. Sallam) 63
Nomographs for Sensible Heat Carried out of Furnace by Products of Combustion (K. Kumar, S. Bal) . . 68
Factors Influencing Effectiveness of Radio-Frequency Dielectric Heating on Rice Bran (V.V. Sreenarayanan, P.K. Chattopadhyay) 71
Simple and Low Cost on-Farm Paddy Dryer (Part-II) (K. Uyeda) 75
News 78
Book Review 79

◇ ◇ ◇

AGRICULTURAL MECHANIZATION IN ASIA, AFRICA AND LATIN AMERICA (Vol. 18, No. 1, Winter, 1987)
Editorial (Y. Kishida) 9
Study on Basic Knowledge of Plowing Science for Asian Lowland (Paddy Field) Farming (J. Sakai, Phongsupasamit, T. Kishimoto) . . 11
Preparation of Medium-Textured Soil for Rice Production (A. Razzaq) . . 19
Effect of Field Dimensions on Energy and Labour Consumption for Rotary Cultivating Small-Sized Plots (Md. W. Ullah, S. Kofoed) 22
Flat and Broadbed-and-Furrow Systems of Cultivation (H. Lal) 27
Energy Consumption in Rice Processing Operations in Nigeria: Selected Case Studies (G.O.I. Ezeike) 33
Stabilization of Rice Bran by conduction Heating in a Continuous Rice Bran Stabilizer (A. Chakraverty, D.S.K. Devadattam) 41
Some Physical Properties of Wheat and Paddy and their Relationships (Md. N. Islam, T.T. Pedrsen) 45
Relationship of Grain Shape and Mass to Tensile Strength of Rice (M.S.U. Choudhury) 51
Development and Field Evaluation of a Stubble Collector-Cum-Planker (N.K. Bansal, D.N. Sharma, M.L. Jain) 57
Low-Cost Peat Production and Gasification (M.E. Herbst) 60
Integrated Regional System of Thermal Utilization of Biomass Resources (H. Shimizu, T. Kimura, R. Pairintra) 65
Sugarcane Trash Management in India (A.C. Srivastava, R.D. Singh) 72
Delivery System for Farm Machinery Technology in India (G. Singh, T.P. Ojha) 75
News 83
New Products 85

◇ ◇ ◇

AGRICULTURAL MECHANIZATION IN ASIA, AFRICA AND LATIN AMERICA (Vol. 18, No. 2, Spring, 1987)
Editorial (Y. Kishida) 9
Studies on Basic Knowledge of Plowing Science for Asian Lowland-Paddy Farming (J. Sakai, S. Phongsupasamit, T. Kishimoto) 11
Case Studies on Tractor Utilization for Two Farming Districts in Northern India (G. Singh, R.K. Tandon) 18
Effect of Vegetative Cover, Tillage and Planting System on Run-off, Soil Erosion and other Soil Physical Properties (F. Abiyo) 23
Harvesting of Acala Cotton by Machines in Rahad Scheme in the Sudan (M.H. Ahmed, B.D. Bilal, S.A. Mohamed, E.A. Simsaa) 29
Development and Evaluation of Wide-Swath, Tractor-Mounted Sprayer for Cotton Crop (L.N. Shukla, N.S. Sandhar, S. Singh, J. Singh) . . 33
Comparative Performance of Rasp-Bar and Wire-Loop Cylinders for Threshing Rice Crop (J.G. Sarwar, A.U. Khan) 37
Rice Drying, Husking and Milling (S.J. Omar, R. Yamashita) 43
Problems in Storing and Processing High-Moisture Paddy (S.A. Raj, K. Singaravadivel) 47
A Study of Mechanism for Measuring Draft of Single-Bullock Cart (D.N. Sharma, S.P. Agarwal, M.L. Jain) . . 50
Development of a Rice Parboiling Machine (A.A. Obobi, U.G.N. Anazodo) 53
Cardamom Processing in South India (R.T. Patil) 55
Ginger Peeling Machine Parameters (Y.C. Agrawal, A. Hiran, A.S. Galundia) 59
Design and Development of a High-Capacity Chopper for Water Hyacinth (M. Alam, D. Gee-Clough) . . 63
Design of FMI Sugarcane Planter (M. Khalid) 67
Mechanization of Sugarcane Farming at Komenda, Ghana (R.J. Bani) . . . 69
Methods of Determining Heat Potentials of Agricultural Biomass (K. Kumar, S. Bal, T.P. Ojha) 71
A Comparative Study on the Effects of Four Drying Methods on Germination of Paddy (Md. A.K. Milah, Md. A. Quasem, K.A. Haq) 74
Application of Network Approach in Agro-Industry in Pakistan (A.P. Chaudhary, M.A. Sargana, S.I. Ahmad) 77
Abstracts 62
News 83
New Products 85

AGRICULTURAL MECHANIZATION IN ASIA, AFRICA AND LATIN AMERICA (Vol. 18, No. 3, Summer, 1987)
Editorial (Y. Kishida) 9
Engineering Design Theories of Hand-Tractor Plows (J. Sakai, S. Phongsupasamit, T. Kishimoto) 11
Development of Improved Agricultural Implements at ICRISAT (N.K. Awadhwal, T. Takenaga, R.K. Bansal 21
A Study on Field Performance of Small Tractors (D. Erdoğan) 26
Factors Affecting Repair and Maintenance Costs of Farm Tractors (S. Bukhari, J.M. Baloch, A.N. Merani) 29
Feasibility Study on Animal-Drawan Tool Carrier for Selected Crop Rotations (S. Singh, S. Singh, V.K. Sharma, P.K. Gupta) 33
Implications of Tractorization on Employment, Productivity and Income in an Irrigated Area of Ahmednagar District, India (A.S. Patil, A.S. Sirohi) 36
Lining Irrigation Canals with Asphaltic Materials in Bangladesh (A. Khair, S.C. Dutta) 41
Effect of Irrigation Methods on Silage Yield of Corn (I.B. Koondhar, B.A. Chandio, B.T. Devrajani) 46
Monitoring Corn Canopy and Root by Precision Planting: A Challenge on Planter Design (R.C. Yadav, U.S. Gupta) 49
Drainage Problems in Al Hasa, Saudi Arabia (A.H. Abdoun) 51
Rice Drying, Husking and Milling (S.J. Omar, R. Yamashita) 53
Development of an Axial-Flow Thresher with Multi-Crop Potential (O.P. Singhal, G.E. Thierstein) . . . 57
Development of a Bulk-Milk Vending Machine (D.V.K. Samuel, S.A.D. Prasad) 66
Bullock-Operated Dung-Cleaner (H.C. Joshi, D.N. Jana, D. Chaudhuri, A.E. Nivsarkar) 69
A Low Cost Village-Level Milk Sterilizer (S.L. Srivastava, N.G. Bhole) 71
Farm Machinery Utilization Planning (T. Konaka) 75
Abstracts 81
News 82
New Products 83
Book Review 84

INDEX TO ADVERTISERS

EIMA 4
Iseki & Co., Ltd. 2
Mametora Agric. Machinery Co., Ltd. 91
Matsuyama Plow Mfg. Co., Ltd. 6
Ohashi Agric. Machinery Mfg. Co., Ltd. 5
Sukigara Agric. Machinery Co., Ltd. 5
Toyosha Co., Ltd. 90
Yamamoto Mfg. Co., Ltd. 6

HINOMOTO® TECHNOLOGY RESPONDS TO THE FARMERS' NEEDS

Nothing is more important than creating the best soil conditions for the growth of plants. For years, Hinomoto has been supplying farmers with tractors and implements that help them do their job with comfort and efficiency. With the tradition of responding to the farmers' needs, Hinomoto continues to develop new and better products using our advanced technology. After all, we share farmers' goals: richer harvests and greater yields.

E484
4-wheel drive, 52 hp. 2,330 cc

With work performance you can depend on

HINOMOTO® TRACTOR

Hinomoto tractors are available in a wide range of models to meet specific requirements of farmers in any farming scale, from small to large.

At your service with heart and mutual trust

TOYOSHA CO.,LTD.
SINCE 1863

55, Joshoji-16, Kadoma-city, Osaka, 571 Japan
Cable: TOYOSHA NEYAGAWA
Telex: 05347763 MBTRAC J

MAMETORA DEDICATES TO AGRICULTURE ALL OVER THE WORLD

Researches and Development
Unequaled Wealth of experiences and technology

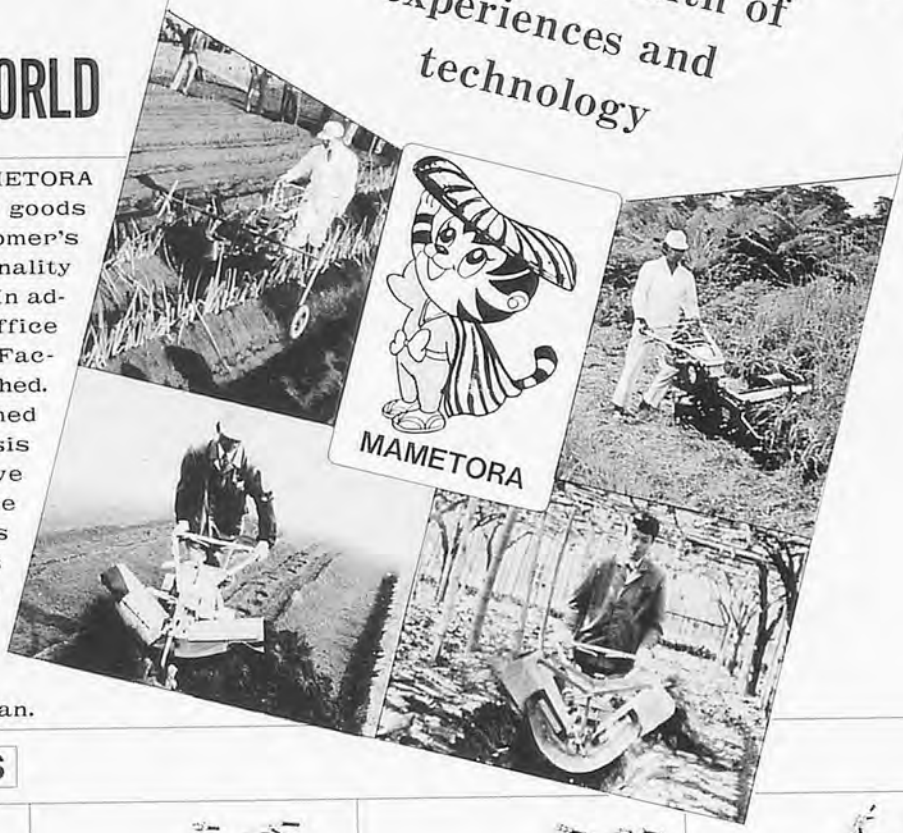

It is the motto of MAMETORA that we manufacture goods in order to meet customer's benefits with originality trusty and hearty. In addition to the head office in Okegawa Kisakata Factory has been established. Now that we have formed the much steadier basis as a comprehensive manufacturer. We are always making efforts to manufacture goods of high quality and are pleased to devote ourselves to the food industry in the world as well as that in Japan.

EXPORT SERIES

MC-80R Multing Rotor Set

MC-100

MC-130E

MC-181SB

MC-200

MC-210 スキ付

LV-1

LV-2

MAMETORA AGRIC. MACHINERY CO., LTD.

HEAD OFFICE ADD : 9-37, NISHI-2 CHOME, OKEGAWA-SHI, SAITAMA-KEN, JAPAN.
TELEPHONE : 0487-71-1181 TELEX : 2922561 MAMETO-J