International specialized medium for agricultural mechanization in developing countries

ISSN 0084-5841

AMA

AGRICULTURAL MECHANIZATION IN ASIA, AFRICA AND LATIN AMERICA

VOL.20, NO.1, WINTER 1989

FARM MACHINERY INDUSTRIAL RESEARCH CORP.

ISEKI

ISEKI...Dedicated abundant harvests

As the means of producing life-sustaining food, agriculture surely rates as one of the most important industries in the world.

Since its founding 60 years ago, ISEKI has been doing its part to ensure that those engaged in the worldwide agricultural effort can meet modern challenges. Through the production of quality farm machinery and labor saving systems, ISEKI has become famous as the premier manufacturer of such machinery.

It is ISEKI's sincere hope that by continuing these efforts, world agriculture will further develop, thereby producing abundant harvests and world peace for people everywhere.

to producing and world peace

ISEKI & CO., LTD.

Foreign Affairs Division
3-6, Kioi-cho, Chiyoda-ku, Tokyo, 102 Japan
Cable Address: ISEKIRICE TOKYO
Telex: 232-2752, 232-2753
Phone: (03) 238-5245~5260

HINOMOTO® TRACTOR

Hinomoto Tractors — Technology Teaming with Nature for a Better Tomorrow

In complete harmony with nature, Hinomoto technology ensures a bountiful harvest for the benefit of mankind. Agriculture has long been the foundation of civilization. Our commitment to serving society has led us to develop the most advanced machinery and technology, thus creating a bright, promising tomorrow. By maximizing the benefits of Mother Nature, we help farmers everywhere achieve a rich, prosperous harvest whose bounty is shared with all.

The world's first power disc revolutionized agriculture by eliminating the defects of conventional rotary tillers. The power disc tills deep into the ground, increasing the amount of land that can be cultivated and producing the ideal soil consistency for growth.

TOYOSHA CO., LTD.

55, Joshoji-16, Kadoma-city, Osaka, 571 Japan
Cable: TOYOSHA NEYAGAWA
Telex: 05347763 MBTRAC J

International specialized medium for agricultural mechanization in developing countries

ISSN 0084-5841

AMA

AGRICULTURAL MECHANIZATION IN ASIA, AFRICA AND LATIN AMERICA

VOL.20, NO.1, WINTER 1989

Edited by

YOSHISUKE KISHIDA

Published quarterly by

Farm Machinery Industrial Research Corp.

in cooperation with

The Shin-Norinsha Co., Ltd.

and

The International Farm Mechanization Research Service

TOKYO

Yoshisuke Kishida, Publisher & Chief Editor

Contributing Editors and Cooperators

- AFRICA -
Van Lancker, Julien G. (Brundi)
Baryeh, Edward A. (Cameroon)
El Hossay, A.M. (Egypt)
Kandiah, Arumugam (Ethiopia)
Ampratwum, David Boakye (Ghana)
Bani, Richard Jinks (Ghana)
Djokoto, Israel Kofi (Ghana)
Some, D. Kimutai arap (Kenya)
Choudhury, Md. Shahansha Uddin (Nigeria)
Igbeka, Joseph C. (Nigeria)
Odigboh, E.U. (Nigeria)
Oni, Kayode C. (Nigeria)
Kuyembeh, N.G. (Sierra Leone)
Abdoun, Abdien Hassan (Sudan)
Saeed, Amir Bakheit (Sudan)
Khatibu, Abdisalam I. (Tanzania)
Tombo, Solomon (Zimbabwe)

- AMERICAS -
Nääs, Irenilza de Alencar (Brazil)
Ghaly, Abdelkader E. (Canada)
Valenzuela, A.A. (Chile)
Mirdha, A.H. (Mexico)
Chancellor, William J. (U.S.A.)
Esmay, Merle L. (U.S.A.)
Goyal, Megh Raj (U.S.A.)
Philips, Allan L. (U.S.A.)

- ASIA and OCEANIA -
Farouk, Shah M. (Bangladesh)
Mazed, M.A. (Bangladesh)
Gurung, Manbahadur (Bhutan)
Wang, Wanjun (China)
Chandra, Satish (Fiji)
Michael, A.M. (India)
Mittal, J.P. (India)
Ojha, T.P. (India)
Verma, S.R. (India)
Soedjatmiko (Indonesia)
Behroozi-Lar, Mansoor (Iran)
Sakai, Jun (Japan)
Snobar, Bassan A. (Jordan)
Chung, Chang Joo (Korea)
Haffar, Imad (Lebanon)
Bardaie, Muhamad Zohadie (Malaysia)
Shrestha, Bala Krishna (Nepal)
Afzal, Mohammad (Pakistan)
Chaudhry, Allah Ditta (Pakistan)
Chaudhry, Md. Siddique (Pakistan)
Devrajani, Bherulal T. (Pakistan)
Mughal, A.Q. (Pakistan)
Nath, Surya (Papua New Guinea)
Lantin, Reynaldo M. (Philippines)
Venturina, Ricardo P. (Philippines)
Aziz, M.H. Abdel (Saudi Arabia)
Illangantileke, S. (Sri Lanka)
Kathirkamathamby, Suppiah (Sri Lanka)
Chang, Sen-Fuh (Taiwan)
Rojanasaroj, C. (Thailand)
Singh, Gajendra (Thailand)
Pinar, Yunus (Turkey)

- EUROPE -
Kaloyanov, Anastas P. (Bulgaria)
Pedersen, T. Touggaard (Denmark)
Pellizzi, Giuseppe (Italy)
Wanders, A. Anne (Netherlands)
Kilgour, John (U.K.)

EDITORIAL STAFF
(Tel. 03/291-5718)
Yoshisuke Kishida, Chief Editor
Kensuke Sakurai, Managing Editor
Yoshinori Sasaki, Assistant Editor
Noriyuki Muramatsu, Assistant Editor
D.A. Cruz, Editorial Consultant

ADVERTISING
(Tel. 03/291-3672)
Kuniharu Ikeda, Manager (Head Office)
Hiroshi Yamamoto, Manager (Branch Office)
Advertising Rate: 300 thousand yen per a page

CIRCULATION
(Tel. 03-291-5718)
Soichiro Fukutomi, Manager
Editorial, Advertising and Circulation Headquarters
7, 2-chome, Kanda Nishikicho, Chiyoda-ku, Tokyo, 101, Japan

Copyright © 1988 by

FARM MACHINERY INDUSTRIAL RESEARCH CORP.
SHIN-NORIN Building
7, 2-chome, Kanda Nishikicho, Chiyoda-ku, Tokyo 101 Japan
Printed in Japan

This is the 62nd issue since the issue, Spring of 1971

EDITORIAL

Good-bye, 1988: Welcome, 1989!

In bidding the worn-out year 1988 adieu and at the same time ushering in with a warm welcome the New Year 1989, the AMA staff takes the occasion to express a vote of thanks to all AMA readers, advertisers, co-operating editors and all others who in one way or another helped sustain the AMA issues over the last 12 months – another milestone in the life and times of AMA. As ever, and together, we shall pool again our resources and face bravely the New Year and all the uncertainties that come with it. We, at the AMA staff, are full of hopes that 1989 shall not be blemished anymore with such catastrophies as the gruesome Armenia earthquake, the explosion that downed the doomed Pan Am 103 in Scotland, or, the mysterious death of Pakistan's President Zia and compnay, also, in a plane crush. Rather, we all like to envision a non-violent year ahead of us so that we may all enjoy all the blessings that the New Year has in store for us.

True to our mission of helping promote peace through the years, we at the AMA staff, hope that a more equitable distribution of food shall prevail in 1989 and onwards; a world-wide concern and effort shall be given to the preservation of the ecological system in terms of conserving green fields and verdant mountains; and that the small farmers in the Third World be provided with a little more clothing on their backs, a little more roof over their heads and little more food for their stomach.

As in the previous winter issues of AMA, we resolve to improve on our performance over the year gone by and to strengthen the cooperation that binds the staff and our co-operating editors and advertisers.

Here's wishing all of you out there a VERY HAPPY NEW YEAR !

Yoshisuke Kishida
Chief Editor

Tokyo
January, 1989

CONTENTS

AGRICULTURAL MECHANIZATION IN ASIA, AFRICA AND LATIN AMERICA

Vol. 20, No. 1, Winter 1989

Yoshisuke Kishida	7	Editorial
E.J. Calilung R.E. Stickney	9	Comparison of Tillage Equipment for Small Rice Farms
Sheruddin B. Bukhari Jan Mohammad Baloch Ali Nawaz Mirani	17	Soil Manipulation with Tillage Implements
R. Manian P. Jivaraj	20	Puddled Characteristics of Soil with Selected Implements
N.K. Awadhwal C.P. Singh	25	A Methodology for Performance Evaluation of Puddling Implements
Md. Wali Ullah S.S. Kofoed T.T. Pedersen	27	Comparative Performance of Four-wheel Tractor and Two-wheel Tractor in Small Plots
Janardan Prasad Gopal Lal Meena	31	Simplified Approach for Evaluating Longitudinal Stability of Agricultural Tractors
A.P. Sharma M.K. Garg R.S.R. Gupta	38	Use of Seed-cum-fertilizer Drill in Wheat Crop Production
A. Tajuddin	41	Design Development and Testing of Hand Rotary Broadcasting Device for Seeds, Fertilizers and Granular Insecticides
Kulbir Singh Malhotra Ms Manjeet Kaur	45	Selection of Appropriate Solar Pump for Agricultural Applications
Fleurdeliz S. Jaurez Bart Duff Amanda Te Robert E. Stickney	49	Socio-economic and Technical Performance of Mechanical Reapers in the Philippines
S.K. Tandon J.S. Panwar	55	Status of Mechanization of Harvesting and Threshing of Soybean in India
A.C. Varshney K.V. Patel A.S. Patel	61	Design and Development of Bullock-drawn Potato Digger
Muammer Nalbant Poyraz Ulger	63	Comparative Performance of Machine Milking Methods in Turkey
Mehmet Yilmaz	66	Steering of Rear Axle Wheels in Three-axle Trailers
A.R. Tahir M. Zafar Khan H.M. Lapp	69	Vegetable Oil Derivatives: Fuel for Diesel Engines
Azhar Iqbal Mufti S. Iqbal Ahmad Abdul Majid	73	Farm Accidents in Pakistan
Abdul Razzaq	76	In-service Training for Agricultural Extension Staff in Pakistan

Abstracts 44
News 79
Book Review 82

* * *

Instructions To AMA Contributors 83
Co-operating Editors 84
Back Issues 86

Comparison of Tillage Equipment for Small Rice Farms

by
E.J. Calilung
Research Assistant
Agric. Engg. Dept.
International Rice Res. Inst.
P.O.Box 933, Manila
Philippines

R.E. Stickney
Agric. Engineer
Agric. Engg. Dept.
I.R.R.I.
P.O. Box 933, Manila
Philippines

Abstract

Tillage equipment commonly used on rice farms in the Philippines were compared with respect to field and economic performance. The equipment comprises that: (1) buffalo-drawn plow and comb harrow; (2) hand tractor with moldboard, disk and spiral plows, and with comb harrow; and (3) floating power tiller.

The floating power tiller generally gave the best field performance, having the highest field capacity and lowest total fuel requirement. This performance is further reflected in the economic analysis showing the floating tiller to have the highest profitability.

Indtoruction

Prior to the mid-1960s, ricefields in the Philippines were prepared (tilled) primarily by means of animal-drawn implements (**Fig. 1**). Use of two-wheel hand tractors has increased significantly since 1965 (Bautista and Castro, 1980), and it is estimated that over 50% of the ricefields are now tilled with these machines. Studies indicate various reasons for the rapid change from animal-powered to engine-powered tillage, with the primary one perhaps being the introduction of modern varieties and irrigation systems, which resulted in higher yields and cropping intensities (Duff, 1978).

A small number of hand tractors were imported during the 1950s and 1960s; this was followed by a marked increase in importation during the 1970s (Juarez and Duff, 1977). The production of locally-made hand tractors quickly followed, and since 1976 the annual sales of locally made units has surpassed that of imported units. Over 65 firms were manufacturing hand tractors in the Philippines by 1979 (Bautista and Castro, 1980).

Although most locally-made hand tractors are very similar in basic design of the frame and transmission, there are significant differences in the implements used with hand tractors in various areas of the Philippines. The most common implements for primary tillage of ricefields are the following:

Moldboard plow (**Fig. 2**) – This type of implement is popular in many areas of the Philippines and is readily accepted by farmers who are already familiar with moldboard plows pulled by animals.

Fig. 1 Buffaro-drawn implements used for land preparation on small rice farms in the Philippines. Top: Moldboard plow, Middle: Comb harrow, Bottom: Leveling board.

Spiral plow (**Fig. 3**) – This is a Filipino innovation in which the conventional cage wheels are replaced by cylinders with spiral blades. The main advantage is that the swath of land tilled per pass is much wider than for the moldboard plow, thereby increasing the field capacity of the hand tractor.

Acknowledgments: This paper is based mainly on the principal author's masteral thesis done at the Asian Institute of Technology. The authors wish to acknowledge the valuable suggestions and assistance given by Dr. David Gee Clough, Dr. Vinod K. Jindal, and Dr. Billy J. Cochran who served as thesis advisors.

This implement is especially popular in areas where the soil is too hard to till conveniently with other implements.

Disk plow (Fig. 4) – The double disk plow has gained popularity in parts of Central and Northeast Luzon during the past five years, displacing the moldboard and spiral plows. It is a smoothly operating implement with a swath approximately twice that of the moldboard plow. Also, one of the disks may be repositioned on an extension bar in order to plow near the edge of the field, thereby avoiding the necessity of hiring an animal-drawn plow to till the edges which cannot be reached by a moldboard plow mounted on a hand tractor. The disadvantages of the disk plow are that its cost, weight, and power requirement are substantially higher than for a moldboard plow.

Cagewheels + comb harrow (Fig. 5) – In areas where the soil is very soft due to excess water, farmers often use the conventional cagewheels and comb harrows of their hand tractors for primary tillage as well as for subsequent harrowing operations. By pushing down on the hand tractor's handle bars, the operator forces the comb harrow to penetrate the soil and serve as a brake to forward motion, thereby causing the cage wheels to slip and till ("puddle") the soil. The advantages of this technique are that: (a) it requires no additional implements other than those used for harrowing; (b) it is the most suitable implement for waterlogged fields; and (c) the margins of the field can be easily tilled.

None of the implements described above perform satisfactorily in fields where the depth of the mud layer above the hardpan is greater than approximately 30 cm. In such fields, hand tractors tend to bog down. This led Filipino innovators to develop "floating" (i.e., low ground pressure) power tillers as shown in Fig. 6 (Villaruz, 1985).

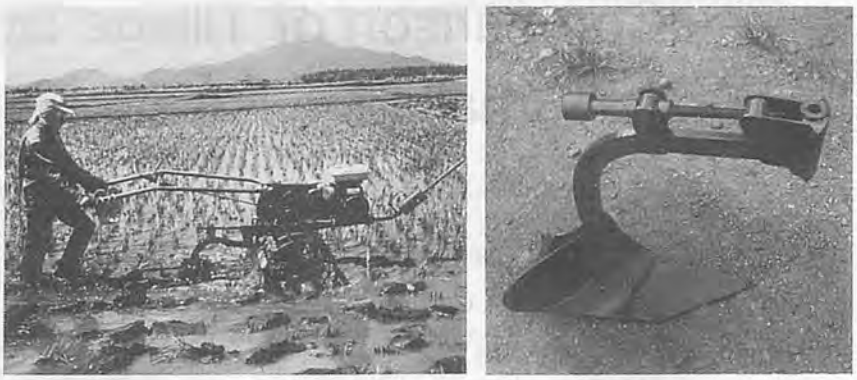

Fig. 2 Handtractor with moldboard plow.

Fig. 3 Handtractor with spiral plow.

Fig. 4 Handtractor with disk plow.

Fig. 5 Handtractor with cagewheels and plow.

Fig. 6 Floating tiller manufactured in the Philippines.

The body is a buoyant, boatlike structure, and tillage is performed by a wide, front-mounted rotor driven through a simple transmission. By pushing down on the handle bars, the forward motion is retarded and the rotor slips in the soil to provide the desired tillage. The floating tiller has gained substantial acceptance in waterlogged areas with deep mud. The tiller is occasionally used in normal fields by farmers attracted by the machine's high field capacity and the reduced number of passes needed to obtain the desired degree of tillage ("puddling"). The primary disadvantages of the floating tiller are difficulty in transport and low utility for other operations, such as pulling a trailer.

Objectives

The objective of the present study was to compare the performance of the described tillage equipment so that we can better: (a) advise farmers regarding those combinations most appropriate to their particular soil and water conditions, and (b) attempt to improve the design of hand tractors and implements. Due to limitations of time and funds, the study was limited to a single location at Pili, Camarines Sur, which has soil composition of 45% clay, 18% sand, and 37% silt. The location was selected because it has a farm which practices continuous cropping and has a very cooperative owner and staff who were already utilizing floating tillers.* Although the results are not applicable to the complete range of soil and water conditions in the Philippines, we believe they provide valuable insights into the comparative technical and economic advantages of the most popular tillage equipment.

*We are grateful for the generous collaboration of Mr. Apolonio Marasigan and his farm manager, Gerry Canoy.

Equipment and Procedures

The hand tractor and all implements were purchased from one major manufacturer. The transmission has a two-step reduction using chains and sprockets, with no provision for steering clutches, reverse gear, or multiple forward speeds. This design is the most common among locally-made hand tractors because of its low cost and ease of repair. A 10-hp gasoline engine was used for all tests. The floating tiller was fabricated by the metalcraft shop of the farm where the tests were conducted, and it was also equipped with an identical 10 hp gasoline engine.

Soil and water conditions varied across fields because of differences in drainage, irrigation scheduling, and previous cropping achedule. A cone penetrometer was utilized to estimate the thickness of the soil layer above the "hardpan" (compacted layer), with all measurements taken with an SR-2 cone at 2.5 kg/cm^2 (Calilung, 1985). These measurements enabled us to separate test fields into three soil depths:

Normal soil-depth conditions – fields with cone penetration depths between 10 and 20 cm.

Intermediate soil-depth conditions – fields with cone penetration depths between 20 and 30 cm.

Extreme soil-depth conditions – fields with cone penetration depths greater than 30 cm.

We wished to compare equipment used for primary tillage, i.e., the first pass through a field containing residual stubble from the previous crop, plus weeds and straw. In all tests, the fields were flooded at least 1/2 day before tillage, a practice which is consistent with most farmers' customs.

Tests were also carried out on secondary tillage which involved harrowing with the hand tractor to incorporate weeds and stubble and to provide preliminary leveling. The harrowing operation also produced some puddling of the soil through the action of the cagewheels. Depending on farmer preference and field condition, the harrowing operation is generally repeated two to six times (Deomampo, 1969).

In the case of the floating tiller, we followed the farmers' practice of utilizing the same machine for both primary and secondary tillage instead of harrowing by hand tractor or animal. In all treatments, the final pass was the leveling operation in which a long wooden plank was pulled by a water buffalo (**Fig. 1c**).

Results

The results of the field tests are summarized in **Table 1** (for normal soil-depth conditions) and in **Table 2** (for extreme soil-depth condi-

Table 1 Performance of Alternative Tillage Technologies for First Pass on Fields Having Normal Soil-depth Conditions[a]

Technology[b]	Capacity (ha/h)	Fuel consumption (liter/h)	Tillage depth (cm)	Volume tilled per hour (m^3/h)	Volume tilled per liter fuel (m^3/liter)
HT/moldboard plow (n=7)	0.108 α	1.98	10.1	109.1	55.1
HT/disk plow (n=7)	0.144 β	2.29	9.5	136.8	59.7
HT/spiral plow (n=6)	0.163 β	2.26	9.5	154.8	68.5
HT/cage wheels + harrow (n=8)	0.148 β	2.21	6.7	99.2	44.9
Floating tiller (n=6)	0.241 γ	3.15	5.6	135.0	42.8

Remarks: a – Soils with cone penetration depths of 10-20 cm at 2.5 kg/cm^2, b – HT = hand tractor, n = number of tests. c – Values followed by the same Greek letter are not significantly different at the 5% level (Duncan's multi-range test).

Table 2 Performance of Alternative Tillage Technologies for First Pass on Fields Having Extreme Soil-depth conditions.

Technology[b]	Capacity (ha/h)	Fuel consumption (liter/h)	Tillage depth (cm)	Volume tilled per hour (m^3/h)	Volume tilled per liter fuel (m^3/liter)
HT/moldboard plow	0.085	2.45	8.4	71.4	29.1
HT/disk plow	c	c	c	c	c
HT/spiral plow	c	c	c	c	c
HT/cagewheels + harrow (n=2)	0.116	2.62	10[d]	116	44.3
Floating tiller (n=2)	0.268	3.26	10[d]	268	82.2

Remarks: a – Soils with cone penetration depths greater than 30 cm at 2.5 kg/cm². b – HT = hand tractor, n = number of tests. C – Technology not applicable for soft, deep soil because of excessive bogging. d – Approximate minimum depth.

tions). As shown in **Table 1**, the floating power tiller has the highest field capacity but also the highest fuel consumption, whereas the moldboard plow has the lowest capacity and lowest fuel consumption. The other implements fall between these two extremes and the differences are not statistically significant. Notice that tillage depth is significantly less for the floating tiller and HT/cagewheels + harrow than for other alternatives. Consequently, the volume of soil tilled per hour (m^3/h) with the floating tiller is lower than for the HT/spiral plow even though the machine's field capacity (ha/h) is significantly higher. In terms of volume tilled per liter of fuel (m^3/l), the HT/spiral plow was highest and the floating tiller lowest.

For extreme soil-depth conditions (**Table 2**), the HT/disk plow and HT/spiral plow could not be used due to immobility in deep mud. The HT/moldboard plow occasionally bogged down, resulting in a very low field capacity. The HT/cagewheels + harrow and the floating tiller performed satisfactorily in fields having very soft and deep soil conditions. The results in **Table 2** indicate the superiority of the floating tiller. **Tables 1** and **2** show that the volume tilled per hour and per liter of fuel with the floating tiller is about twice as high for extreme soil-depth conditions compared with normal soil-depth conditions, primarily because of the increased depth of tillage.

Analysis

Table 3 contains the data needed to calculate the variable costs of the alternative technologies for all steps of land preparation. Data for primary tillage are taken from **Table 1** except for the buffalo/moldboard plow. The field capacities for animals used in primary tillage, harrowing, and leveling are based on average data for a survey of farmers in Camarines Sur. Data for harrowing, puddling, and leveling by hand tractor and floating tiller are based on tests conducted in the same fields as the primary tillage tests (Calilung, 1985). The buffalo/moldboard plow has the lowest variable cost per ha because it requires no fuel. Also included in the table are the prevailing contract rates for each technology as estimated from data obtained in Libmanan, Camarines Sur. The contract rate for the buffalo/moldboard plow is approximately 1/2 that of other technologies, primarily because farmers are willing to pay a premium for engine-powered equipment which reduce

Table 3 Field Capacity, Fuel Consumption, Variable Cost, and Contract Rate for Alternative Tillage Technologies.

System and component operations	Field capacity (h/ha)	Fuel consumption (liters/ha)	Variable cost ($/ha)[a]	Contract rate ($/ha)[b]
Buffalo/Moldboard plow:	78.00	0	18.55	36.11
Primary tillage	24.00	0	5.71	
1st harrowing	18.00	0	4.28	
2nd harrowing	18.00	0	4.28	
Final harrowing + leveling	18.00	0	4.28	
Hand tractor/Moldboard plow:	31.74	54.15	39.46	70.59
Primary tillage	9.26	18.33	12.97	
Plow edges (by buffalo)	6.00	0	2.14	
1st harrowing	8.85	19.03	13.08	
Final harrowing + leveling	7.63	16.40	11.27	
Hand tractor/Disk plow:	23.06	50.23	34.36	70.59
Primary tillage	6.58	14.80	10.02	
1st harrowing	8.85	19.03	13.08	
Final harrowing + leveling	7.63	16.40	11.27	
Hand tractor/Spiral plow:	23.06	51.29	34.84	70.59
Primary tillage	6.58	14.80	10.02	
1st harrowing	8.85	20.09	13.55	
Final harrowing + leveling	7.63	16.40	11.27	
Hand tractor/Cagewheels + Harrow	21.84	47.60	32.56	70.59
Primary tillage	6.58	14.80	10.02	
1st harrowing	7.63	16.40	11.27	
Final harrowing + leveling	7.63	16.40	11.27	
Floating tiller:	17.73	38.67	25.52	70.59
Primary tillage	4.15	13.07	8.00	
1st puddling	3.79	12.80	7.69	
Final puddling + leveling[c]	9.79	12.80	9.83	

Remarks: a – Variable cost includes labor, fuel, and oil b – Contract rates for complete land preparation (Libmanan, Camarines Sur, early 1984). C – Final puddling by floating tiller ($7.69/ha) with leveling by buffalo with wooden plank (1 ha/day at $2.14/ha).

Table 4 Summary of Values Used in Computing Fixed Costs for Alternative Tillage Technologies

Technology	Initial cost (IC) (US$)	Annual Interest (%/year)	Repair and maintenance[a] (% of IC/year)	Salvage value (% of IC)	Useful life (years)
Buffalo/Moldboard plow:	375				
Buffalo	333	15	10, 52, 93	75	15
Moldboard plow	22	15	5	5	5
Comb harrow	20	15	5	5	5
HT/Moldboard plow:	1037				
Hand tractor	500	15	5	10	7
10 hp gasoline engine	463	15	10	10	5
Moldboard plow	45	15	5	5	7
HT/Disk plow:	1078				
Hand tractor	500	15	5	10	7
10 hp gasoline engine	463	15	10	5	7
Comb harrow	29	15	5	5	7
HT/Spiral plow	1064				
Hand tractor	500	15	5	10	7
10 hp gasoline engine	463	15	10	10	5
Spiral plow	72	15	5	5	7
Comb harrow	29	15	5	5	7
HT/Cagewheels & Harrow:	992				
Hand tractor	500	15	5	10	7
10 hp gasoline engine	463	15	10	10	5
Comb harrow	29	15	5	5	7
Floating tiller:	963				
Floating tiller body	500	15	5	10	7
10 hp gasoline engine	463	15	10	10	7
Comb harrow	29	15	5	5	7
Floating tiller:	963				
Floating tiller body	500	15	10	10	5
10 hp gasoline engine	463	15	10	10	4

Remarks: a – Three estimates for maintenance of the buffalo represent 0, 50, and 100% opportunity costs for labor (see text).

time requirements for land preparation.

Values needed to compute the fixed costs of the alternative technologies are summarized in **Table 4**. The initial costs (IC) are based on current prices for equipment fabricated in the Philippines and, in the case of the buffalo, the current price in Camarines Sur. The annual interest was assumed to be 15%, although this rate has increased markedly since 1985. Estimates for repair, maintenance and salvage values are expressed as percentages of the initial costs, and are "educated guesses" based on past studies of the IRRI Agricultural Engineering Department. The estimates for the buffalo/moldboard plow are based primarily on the results of a 1980 survey (Maranan, 1981) which indicate the primary expenses for buffalo maintenance as follows: (a) medicine and special feed ($30/yr), and (b) labor required to tend the animal during grazing and watering (3.5 h/day or 160 man-day/yr). If we value farm labor at a representative rate of $1.80/day, the annual labor expense is substantial ($288/yr) and, as will be seen in the following computations, causes the buffalo/boldboard plow to be uneconomical relative to the hand tractor. For this reason, together with the fact that family members generally tend the buffalo, we decided to adopt also two lower values (i.e., opportunity costs) for labor corresponding to 0 and 1/2 of the $1.80/day rate. Consequently, **Table 4** includes three values for buffalo maintenance, with the lowest including only the cost of medicine and special feed.

Table 5 provides a summary of annual fixed costs and unit variable costs computed from the values in **Tables 3** and **4**. Annual fixed cost is lowest for the buffalo/moldboard plow except where the opportunity cost of labor is assumed to be 100% of the nominal cost ($1.80/day). Variable costs are lowest for the buffalo/moldboard plow, followed by the floating tiller, with both values being substantially lower than for the hand tractor alternatives.

Data in **Table 5** were used to compute the annual utilization (ha/yr) necessary for alternative technologies to break even, i.e., for the annual gross income to be equal to the sum of annual fixed and variable costs. Based on the results shown in **Table 6**, the buffalo/moldboard plow technol-

Table 5 Annual Fixed costs and Unit Variable Costs for Alternative Tillage Technologies.

Technology	Annual fixed cost ($)	Variable cost ($/ha)
Buffalor/moldboard plow	96, 234, 373	18.50
HT/moldboard plow	318	39.50
HT/disk plow	331	34.50
HT/spiral plow	325	35.00
HT/cagewheels + harrow	306	32.50
Floating tiller	370	25.50

Table 6 Breakeven Utilization (ha/year) for Alternative Tillage Technologies

Technology	Undiscounted breakeven utilization (ha/year)	Discounted breakeven utilization[a] (ha/year)
Buffalor/moldboard plow	5.5, 13.4, 21.2	6.2, 14.2, 21.9
HT/moldboard plow	10.2	11.9
HT/disk plow	9.1	10.6
HT/spiral plow	9.1	10.6
HT/cagewheels + harrow	8.1	9.4
Floating tiller	8.2	9.2

Remark: a – Discount rate assumed to be 15% per year.

ogy is less attractive than the other alternatives except when the opportunity costs of labor used for buffalo tending are assumed to be zero. It should be pointed out that the breakeven utilization of the buffalo/moldboard plow would have been more favourable if its contract rate for complete land preparation were equal to that for the engine-powered technologies (**Table 3**). For example, if the buffalo rate was $70.59/ha rather than $36.11/ha, the undiscounted breakeven values would be 1.8, 4.5, and 7.2 ha/yr. On the basis of breakeven considerations, the most attractive alternatives are the HT/cagewheels + harrow and the floating tiller. The annual breakeven areas in **Table 6** are substantially larger than the average size of rice farms (approx. 2 ha) in the Philippines, which means that animal and engine-powered equipment will generally be uneconomical unless used on more than a single farm.

Table 7 presents the benefit-cost ratios computed for the alternative technologies at a discount rate of 15%/yr. Land preparation is limited to specific seasons during the year and, therefore, we have assumed a range of days/yr of annual utilization (25, 50, and 75 days/yr). In all cases, the floating tiller has the highest benefit-cost ratio, primarily because its high field capacity enables it to prepare a larger area during the limited time available for land preparation. Except for the buffalo/moldboard plow, all other technologies become profitable at 50 and 75 days/yr. The buffalo/moldboard plow is the most costly alternative because: a) its low field capacity limits its income-generating potential and; b) animal contract rates are substantially lower than for other technologies (**Table 3**). If the buffalo/moldboard plow method had a contract rate equal to that of the engine-powered technologies, then its benefit-cost ratios would be 0.49, 0.85, and 1.1 for 25, 50, and 75 days/yr utilization, respectively, for the case of 50% opportunity cost. Even in this case, the buffalo/moldboard plow is still not as profitable as the floating tiller.

Table 7 Benefit-Cost Ratios for Alternative Tillage Technologies at Three Levels of Annual Utilization (u = 25, 50, and 75 days per year).

Technology	Benefit-cost ratio		
	u = 25	u = 50	u = 75
Buffalo/moldboard plow	0.50, 0.26, 0.18	0.78, 0.44, 0.31	0.97, 0.59, 0.43
HT/moldboard plow	0.83	1.11	1.26
HT/disk plow	0.91	1.23	1.41
HT/spiral plow	0.91	1.23	1.41
HT/cagewheels + harrow	0.99	1.33	1.52
Floating tiller	1.37	1.81	2.04

Table 8 Estimated Delay in Land Preparation for Alternative Tillage Technologies at Three Intensities of Demand (t_d = 25, 50, and 75 days/year).

Technology	Estimated delay (days)		
	$t_d = 25$	$t_d = 50$	$t_d = 75$
Buffalo/moldboard plow	23, 75, 125	11, 62, 113	−2, 50, 101
HT/moldboard plow	4	−9	−21
HT/disk plow	1	−12	−24
HT/spiral plow	1	−12	−24
HT/cagewheels + harrow	−1.5	−14	−26
Floating tiller	−6.5	−19	−32

Note: Assuming uniform demand and capacity functions (see text), with the number of animals or machines corresponding to the value for undiscounted breakeven.

The estimated delay is negative when a technology has sufficient capacity to finish tilling the total area in a time that is less than the desired duration, t_d (see text).

The preceding benefit-cost analysis evaluates technologies from the viewpoint of equipment owners. Farmers hiring equipment may have a different set of criteria, including: (a) cost, which includes the contract rate (**Table 3**) plus associated expenses; (b) the quality of land preparation (which appears to be essentially equal for all these technologies after soaking, harrowing, and leveling); and (c) timeliness or, conversely, the delay in land preparation associated with alternative technologies. A highly simplified analysis of the timeliness factor is presented below, with the main objective being to obtain estimates which are more realistic than those of previous economic analyses for comparing buffalo and hand tractors (e.g., Jayasuriya et al, 1982).

Consider a group of rice farms of total area A which requires land preparation only once a year. For simplicity, we assume that the daily demand for land preparation is uniform over a period of t_d days (**Fig. 8**). This represents the desired demand, and we wish to determine if there will be deviations (delays) resulting from the limited capacity of tillage equipment. We assume that the maximum number (N) of units of tillage equipment available in the area is equal to:

$$N = A/A_{beu} \qquad (1)$$

where A is the total area to be prepared and A_{beu} is the area for breakeven annual utilization per unit of equipment (**Table 6**). This equation is introduced to ensure that the number (availability) of equipment is not assumed to be so high that it becomes unprofitable to owners.

The total time (t_s) required to complete land preparation of total area A is given by:

$$t_s = \frac{A}{N \times C} \quad (2)$$

where C is the capacity (ha/day) of one unit of equipment. Substituting Eq. (1) for N gives:

$$t_s = \frac{A}{(A/A_{beu}) \times C} = \frac{A_{beu}}{C} \quad (3)$$

In the present example, the delay in land preparation is equal to the distance between the centroids ($x_s - x_d$) of the demand and supply rectangles in **Fig. 8**:

$$\text{Delay} = x_s - x_d = 1/2\ t_s - 1/2\ t_d \quad (4)$$

By substituting Eq. (3) for t_s, we obtain:

$$\text{Delay} = 1/2\ (\frac{A_{beu}}{C} - t_d) \quad (5)$$

From this relation we see that: (a) delays occur only if $A_{beu}/C > t_d$ and (b) the delay will be most serious for technologies having high breakeven values (A_{beu}) and low unit capacity values (C). Notice that Eq. (5) is independent of the total area, A, and the number of units, N.

Equation (5) was used to compute the estimated delays for the alternative technologies, utilizing data for breakeven utilization from **Table 6** and unit capacities from **Table 3**. The results are presented in **Table 8** for three values of t_d, the desired duration of land preparation. Negative values appear in **Table 8** when the technology is capable of carrying out land preparation at a rate exceeding the desired demand rate, e.g., when A_{beu}/C is less than t_d in Eq. (5), thereby causing the delay to be negative. The floating tiller excels, followed by the hand tractor with cagewheels + harrow. The buffalo/moldboard plow incurs large delay because A_{beu} is large and C is small. If the contract rate for the buffalo/moldboard plow was assumed equal to that of the engine-powered technologies, delays would be substantially reduced but still not match the corresponding values for the floating tiller. For example, in the 75-day duration case, delays for the buffalo/moldboard plow would be reduced from −2, 50 and 101 (**Table 8**) to −25, −8, and 9 for 0, 50, and 100% opportunity costs for labor.

Discussion and Conclusions

The present study has three principal limitations: (1) field tests were carried out for only one type of soil and for equipment from only one manufacturer; (2) field measurements were not obtained for buffalo-drawn implements, thereby forcing us to utilize data from other sources; (3) the economic analysis underestimates the value of the buffalo and hand tractors because other uses, such as transportation, were not considered.

Another limitation is that the quality of land preparation was not measured; however, we believe that this is not a serious limitation because differences in quality (e.g., elimination of weeds and degree of "puddling" or dispersion of the soil in water) for the alternative technologies for primary tillage were eliminated by soaking and secondary tillage (harrowing and leveling).

Ranking the alternative technologies differs to some degree depending on the choice of performance indicators. For example, although the floating tiller and the HT/cagewheels + harrow have the highest rankings for most of the indicators used in this study, they are at the bottom of the rankings based on volume of soil tilled per unit time and per unit of fuel (**Tables 1** and **2**). We believe that indicators of tillage volumes are not valid in the case of riceland because adequate land preparation does not require deep tillage. Data reported by O'Toole (1983) and Samuel and McMennamy (1977) indicate rice grows well in fields where the depth of the puddled layer is no more than 10 cm. Consequently, the shallow tillage depth of the floating tiller and HT/cagewheels + harrow appear to be adequate, whereas the greater depths achieved by the moldboard, spiral, and disk plows represent unnecessary expenditures of power which reduce field capacity and increase fuel consumption.

With these points in mind, the main conclusions of the present study are:

1. The floating tiller appears to be the most economical alternative of the six technologies considered. Contrary to general belief, this tiller excels under normal soil-depth conditions (**Table 1**) as well as for the extreme conditions (**Table 2**) for which it was originally designed. This point needs further study under different soil and water conditions.
2. Two operational problems with the floating tiller have to be addressed: the in-field and road transportability problem, and the undesired furrow created by the tiller's float during operation.
3. Results indicate that, for wetland tillage, it is advantageous to have equipment which tills at shallower depths and with a wider swath than conventional plows.
4. The hand tractor with cagewheels + harrow is also an attractive alternative which can be improved by increasing its capacity through: (a) design of cagewheels specifically for tillage (puddling) rather than for flotation; and (b) design of a skid which will enable the operator to control tillage depth and prevent the cagewheels from sinking in soft mud.

REFERENCES

1. Bautista, R.C., and E.C. Castro, Jr. 1980. Hand tractors manufactured in the Philippines. Journal on Agricultural Mechanization in Asia, Spring Issue, 1980. pp. 29-34.
2. Calilung, E.J. 1985. Comparison of land preparation equipment used on small rice farms in the Philippines, Master of Engineering thesis, Asian Institute of Technology, Bangkok, Thailand.
3. Deomampo, N.R. 1969. Comparative economic analysis of experimental data on the use of tractor and carabao in lowland rice farming. *The Philippine Agriculturalist,* pp. 535-546.
4. Duff, B. 1978. Mechanization and use of modern rice varieties. In: Economic Consequences of the New Rice Technology. International Rice Research Institute, Los Banos, Philippines. pp. 145-172.
5. Jayasuriya, S.K., A. Te and R.W. Herdt. 1982. Mechanization and cropping intensification: economic viability of power tillers in the Philippines. Saturday seminar paper, October 1982, International Rice Research Institute, Los Banos, Laguna, Philippines.
6. Juarez, F., and B. Duff. 1977. Chaaging supply and demand patterns for power tillers in the Philippines. Paper presented at the Annual Convention of the Philippine Society of Agricultural Engineers, Manila, April 28-29, 1977.
7. Maranan, C.L. 1981. A comparative analysis of tractor contract operations in Nueva Ecija, Philippines, 1971 and 1980. In Consequences of Small Farm Mechanization in the Philippines, Development Academy of the Philippines.
8. O'Toole, J.C. 1983. Unpublished preliminary data. International Rice Research Institute, Philippines.
9. Samuel, J., and J.A. McMennamy. 1977. Rice production machinery for the tropics. International Rice Research Institute, Philippines.
10. Villaruz, M.S. 1985. The floating power tiller: an agricultural machine for developing countries. In "Small Farm Equipment for Developing Countries: Past Experiences and Future Priorities," The International Rice Research Institute, Los Banos, Laguna, Philippines, September 2-7. pp. 173-178. ■■

COMPUTERIZED AMA INDEX AVAILABLE

A computerized index of technical articles in *Agricultural Mechanization in Asia, Africa and Latin America* has been compiled for the years 1971 through 1987. Each citation includes truncated versions of the title, first and second authors' names and four keywords. Year, issue and page number of each article are given. The citations along with software for searching the database are all included on a single computer diskette for use with IBM-PC, -XT, -AT or compatible type computers.

Anyone wishing to receive this material may send one formatted. 5 1/4-inch, 360 Kbyte, double-sided, double-density diskette to William Chancellor, Agr. Eng. Dept., Univ. of Calif., Davis, CA 95616, USA. The database and searching software will be copied to that diskette, and it will be returned by airmail along with software documentation. There is no charge. Any special customs or postal designation or specifications required should be stated in the letter of request. Annual updates will be available in the future.

Soil Manipulation with Tillage Implements

by
Sheruddin B. Bukhari
Assoc. Prof.
Dept. of Farm Power and Machinery
Sind Agric. Univ.
Tandojam, Pakistan

Jan Mohammad Baloch
Asst. Prof.
Dept. of Farm Power and Machinery
Sind Agric. Univ.
Tandojam, Pakistan

Ali Nawaz Mirani
Lecturer
Dept of Farm Power and Machinery
Sind Agric. Univ.
Tandojam, Pakistan

Introduction

Tillage is the mechanical manipulation of soil. Its major objective is to provide optimum environmental conditions for plant growth. In recent years many types of implements have been designed to accomplish the major objectives of tillage. Moldboard plows, disc plows, disc harrows, cultivators and multi-purpose tools are the examples. The choice lies with the farmer. Nevertheless, he has to consider the environmental conditions of the area. In selecting any set of implements he has to consider the energy requirements and tilth conditions. Measurement of energy becomes a tedious problem because it involves precision instruments but field capacity and tilth conditions are the easiest components to measure. The aim of the farmer is to obtain the best possible soil manipulation with minimum use of tillage implements. Therefore, research is needed to identify a set of implements that gives the best performance in all respects. Keeping this in view, a project was conducted on the University Farm to study the quantity and quality of the soil manipulated by a particular implement. The aim is to enable farmers to become acquainted with the implements that give the best performance.

The implements selected for the study purpose were a moldboard plow, a disc plow, and a disc harrow.

The parameters studies were depth of cut width of cut, speed of operation, residue coverage, and tilth condition.

Experimental Procedure

The tillage implements and tractor used in the research study are described in **Table 1**. Two sites were selected for evaluation of performance of tillage implements. The first site was located about 1 km in the southwest and the second site was located about 100 m in the northeast of Sind Agriculture University, Tandojam. Soil samples were taken from both experimental plots. The soils at both sites were clay loam. The tillage implements used in the study are shown in **Figs. 1**,2 and 3.

Soil Moisture

Soil samples were collected from both study sites. The wet weight of each soil sample was recorded. The samples were dried in an electric oven at 105°C. The dried soil samples were again weighed. The soil moisture content (wet basis) in percent was calculated by the formula.

$$S_m = \frac{W_w - W_d}{W_w} \times 100$$

where

S_m = soil moisture content, %
W_w = wet weight of soil, g
W_d = dry weight of soil, g

At site I, the soil moisture was 7.9% and at site II it was 4.3%.

Speed of Operation

Two tractor gear speeds were used for evaluating the performance of tillage implements at both sites. The speeds were determined by

Table 1 Specifications of Implements and Tractor

Item	Width (cm)	Specifications
Moldboard plow	90	Mounted, 3-bottom, width 30cm each, general purpose.
Disc plow	100	Mounted, 3-discs, 60 cm disc, tilt and disc angles are adjustable, tail wheel adjustable.
Tandem disc harrow	132	Trailing, regular, 12 discs, 22 cm disc spacing, plane disc 56.5 cm, notched disc 57.5 cm.
MF – 135 tractor	–	Massey Ferguson – 135 two wheel drive, 63 kW tractor.

Fig. 1 Mounted type moldboard plow.

Fig. 2 Mounted type disc plow.

Fig. 3 Trailed type disc harrow.

operating the implements between the staked distance of 30.5 m (100 ft.). The time required to cover this distance was obtained by the use of a stop watch, i.e., speed in km/h.

Soil Transport, Width and Depth of Cut

The maximum soil side transport was measured by a pocket steel tape. The width and depth of cut of each test run was measured by a meter scale.

Field Capacity and Soil Disturbed

Field capacity was calculated by using Hunt's formula assuming the time lost during the operation of implements as 17.5%.

$$C = \frac{SWE}{10} = 0.0825\ SW$$

where

C = field capacity, ha/h
S = speed of operation, km/h
W = width of implement, m
E = field efficiency of implements, decimal

The total volume of soil disturbed by each implement during operation was calculated by multiplying the field capacity with depth of cut and 10 000 (10 000 m^2 = 1 ha).

$$V = 10\,000\ CD$$

where

V = soil volume disturbed, m^3/h
C = field capacity, ha/h
D = depth of cut, m

Crop Residue Coverage

Before the operation of the tillage implements, the crop residue was collected from five randomly selected places at both sites by using a wooden frame of 1 m^2. Fig. 4 shows the use of 1 m^2 frame and collection of crop residue. At site I, the ground cover consisted of previous crop stubbles of 8 to 12 cm long calculated at 1280 kg/ha. At site II, the crop residue cover of 10 to 45 cm long was estimated at 1993 kg/ha. After the operation of each tillage implement, the same method was repeated for collecting the crop residue lying on the surface of the tilled area at both sites. Thus the crop residue coverage in percent was calculated.

Results and Discussion

The objectives of the study were to evaluate the performance of three tillage implements at two sites with different soil moisture levels. It was also intended to study the effect of tractor speeds on the performance of the implements. First and second gear speed of MF-135 tractor were used. The data regarding the performance of implements were collected and organized in **Tables 2,3** and **4**.

Table 2A shows the performance of the moldboard plow which was used at two sites with two speeds (4.46 km/h and 6.56 km/h). The performance was found better at speeds I and II on site II as compared with site I. Hence, site II gave better results at both the speeds as compared with site I.

Fig. 4 One square meter frame.

Table 2B shows the performance of the disc plow used at two sites under two speeds of 6.11 km/h and 4.29 km/h. At site II, the speed of the tractor was automatically reduced due to the hard soil, hence high draft forces were recorded. However, soil manipulation was better at site II as compared with that in site I.

The performance of the disc harrow is shown in **Table 2C** which was also used at both sites. Two tractor speeds were used. The performance of the harrow was better at site I at both speeds as compared with that at site II.

The comparative performance of all the implements is shown in **Table 3**. In case of the moldboard plow the speed of tractor had a profound effect on width and depth of cut. High speed gave wider and deeper cut. The moisture content also influenced the field operations. The soil at site II was with low moisture content. Therefore, wider and deeper cut was observed. Increased field capacity and soil volume disturbed were obtained for the disc harrow. However, the depth of cut and residue coverage were better for the moldboard plow.

Table 2 Performance of Moldboard Plow, Disc Plow and Disc Harrow

Replication	Site I Speed	Width of cut	Depth of cut	Field capacity	Soil volume disturbed	Soil side transport	Residue coverage	Site II Speed	Width of cut	Depth of cut	Field capacity	Soil volume disturbed	Soil side transport	Residue coverage
	km/h	cm	cm	ha/h	m^3/h	cm	%	km/h	cm	cm	ha/h	m^3/h	cm	%
A. Moldboard Plow														
						Tractor speed I								
R_1	4.22	90.3	11.0	0.38	418.0	186.67	91.7	5.49	103.5	20	0.47	940.0	171.67	91.6
R_2	4.60	95.0	11.3	0.36	406.8	175.00	92.0	5.63	102.7	19	0.48	912.0	166.67	90.0
R_3	4.58	94.3	12.7	0.36	457.2	168.33	91.0	5.84	104.4	21	0.50	1050.0	176.67	92.0
Mean	4.46	93.2	11.67	0.36	401.67	176.67	91.6	5.65	103.53	20	0.48	967.3	171.67	91.2
						Tractor speed II								
R_1	6.60	93.0	13.3	0.51	678.3	178.33	91.3	6.54	102.7	20.7	0.55	1138.5	176.67	88.4
R_2	6.10	94.0	15.7	0.47	737.9	173.33	89.0	6.10	103.7	19.3	0.52	1003.6	173.33	87.0
R_3	6.46	95.3	15.3	0.51	780.3	178.33	89.5	6.27	102.0	18.0	0.53	954.0	178.33	87.0
Man	6.56	94.1	15.43	0.50	732.17	176.66	89.8	6.3	102.8	19.33	0.53	1032.03	176.11	87.6
B. Disc Plow														
						Tractor speed I								
R_1	6.27	92.7	14.7	0.48	705.6	181.67	65.40	4.66	101.3	22.0	0.39	858.0	170.67	67.2
R_2	6.25	91.3	14.3	0.47	672.1	176.67	64.00	4.22	100.0	21.3	0.35	745.5	174.33	65.0
R_3	5.98	91.7	14.7	0.45	661.5	181.67	63.7	4.59	102.0	19.7	0.39	768.3	171.67	64.0
Mean	6.11	91.9	14.57	0.47	679.73	180.0	64.37	4.29	101.1	21.0	0.38	790.6	172.22	65.4
						Tractor speed II								
R_1	6.86	92.7	12.7	0.52	728.0	178.33	61.5	6.46	109.3	18.3	0.58	1061.4	176.67	64.5
R_2	6.90	96.7	12.7	0.55	698.5	175.33	65.0	6.66	111.0	18.0	0.61	1098.0	166.67	65.2
R_3	7.57	94.3	14.7	0.59	867.3	176.67	63.2	6.60	109.8	18.1	0.59	1067.9	171.33	61.3
Mean	7.10	94.23	13.8	0.55	764.6	176.78	63.2	6.59	110.03	18.1	0.59	1075.77	171.56	63.6
C. Disc Harrow														
						Tractor speed I								
R_1	5.78	116.7	12.7	0.56	711.2	155.00	20.0	5.79	105.7	10.0	0.50	500.00	160.67	20.0
R_2	5.63	117.0	11.7	0.54	631.8	156.67	18.0	6.10	104.0	10.7	0.52	556.4	161.67	23.0
R_3	5.11	119.0	11.3	0.50	565.0	153.33	22.0	5.92	107.0	9.7	0.52	504.4	159.33	21.0
Mean	5.51	117.57	11.9	0.53	636.0	155.00	20.0	5.93	105.57	10.13	0.51	520.3	160.56	21.33
						Tractor speed II								
R_1	7.84	131.7	12.0	0.85	1020.0	166.67	22.0	7.85	107.3	10.0	0.69	690.0	163.33	21.0
R_2	7.32	130.0	10.7	0.79	845.3	163.33	25.0	7.84	109.7	11.0	0.71	781.0	161.67	23.0
R_3	7.57	130.0	11.7	0.83	971.1	165.00	23.0	7.32	105.0	10.0	0.63	630.0	166.00	25.0
Mean	7.58	131.57	11.47	0.82	945.5	165.00	23.33	7.67	107.33	10.33	0.68	700.3	167.67	23.0

Table 3 Comparative Performance of Tillage Implements

Implements	Site I Speed	Width of cut	Depth of cut	Field capacity	Soil volume disturbed	Soil side transport	Residue coverage	Site II Speed	Width of cut	Depth of cut	Field capacity	Soil volume disturbed	Soil side transport	Residue coverage
	km/h	cm	cm	ha/h	m^3/h	cm	%	km/h	cm	cm	ha/h	m^3/h	cm	%
Moldboard plow	4.46	93.2	11.67	0.36	401.67	176.67	91.6	5.65	103.53	20.0	0.48	967.3	171.67	91.2
	6.56	94.1	15.43	0.50	732.17	176.66	89.8	5.97	102.8	19.33	0.53	1032.03	176.11	87.6
Disc plow	6.11	91.9	14.57	0.47	679.73	180.00	64.37	4.29	101.1	21.0	0.38	790.6	192.22	65.4
	7.10	94.23	13.8	0.55	764.6	176.78	63.2	6.59	110.03	18.1	0.59	1075.77	171.56	63.67
Disc harrow	5.51	117.59	11.9	0.53	636.0	155.00	20.0	5.93	105.57	10.13	0.51	520.3	160.56	21.33
	7.58	131.57	11.47	0.82	945.5	165.0	23.33	7.67	107.33	10.33	0.68	700.3	167.67	23.0

Puddled Characteristics of Soil with Selected Implements

by
R. Manian
Professor and Head
Zonal Research Centre
College of Agric. Engg.
Tamil Nadu Agric. Univ.
Coimbatore 641003, India

P. Jivaraj
M.E. (Ag.) Student
College of Agric. Engg.
Tamil Nadu Agric. Univ.
Coimbatore 641003, India

Abstract

Thirteen treatments with different combinations of four bullock-drawn implements, namely; country plough, victory plough, helical bladed puddler and sheep foot roller were chosen for the study. Soil resistance, bulk density, surface tension, percolation loss, weed growth, plant height and number of tillers, grain and straw yield were measured/recorded and an input-output analysis was carried out. Considering these various puddled characteristics of soil, the treatment viz. ploughing once with Victory plough followed by 24 h of watering, helical bladed puddler and then by sheep foot roller was found to be a good treatment for black clay soil.

Introduction

The primary aim of puddling is to prepare the soil under wet condition for rice cultivation. According to the National Commission on Agriculture (1976)[4] in India about 50% of irrigated area is used for rice production, hence also 50% of irrigation water is used for the same crop. Rice is the lowest productive crop per unit of water among cereals but irrigation water requirement is 10^7 *l*/ha, which implies the importance of irrigation water usage and minimization of percolated water loss.

The present study addresses that problem. It is aimed at helping engineers and other scientists engaged in rice cultivation to develop improved processes and treatments which can be efficiently used in wet conditions of soils.

Materials and Methods

Country plough is used by a majority of the farmers, hence it is used as control in comparing other implements' performance for puddling. The other implements chosen were the Victory plough, helical bladed puddler and sheep foot roller.

Straight blade and fan type puddlers were not included in the study because block-like shearing is produced in clay soils and also due to intermittent application of load and release of load vibrations are created. The Victory plough is a modified iron plough and the helical bladed puddler is rotary type and its effects was a subject of study on puddling. The sheep foot roller is rotary type and the effect of compaction was also a subject of study. Hence, the above three implements were chosen for the study. The helical bladed puddler and sheep foot roller are shown in **Figs. 1** and **2**, respectively.

The different combinations of operation among the four implements were chosen to study the effect on physical characteristics of puddled soil. The treatments chosen are listed in **Table 1**.

Coimbatore was selected as the study area as it is a part of 'M' block belonging to wetlands of Tamil Nadu Agricultural University. The results of soil analysis is given in **Table 2**. The puddling work was carried out in December and crop growth during January-April. During the period of experiment no rainfall occured.

Table 1 Different Combinations of Operations Ploughing Treatments

Treatment No.	Implements sequence (R.B.D.)				
1	CP	–	–	–	–
2	CP	–	HBP	–	–
3	CP	W	HBP	–	–
4	VP	–	HBP	–	–
5	VP	W	HBP	–	–
6	CP	–	HBP	–	SFR
7	CP	W	HBP	–	SFR
8	CP	W	HBP	W	SFR
9	CP	–	HBP	W	SFR
10	VP	–	HBP	W	SFR
11	VP	W	HBP	–	SFR
12	VP	W	HBP	W	SFR
13	VP	–	HBP	W	SFR

Legend:
CP – Country plough, VP – Victory plough, HBP – Helical bladed puddler, SFR – Sheep foot roller, W – Water (24 h), Treatments – 13, Replications – 3, Plot size – 8.90 x and 7.7 m, Channel size – 0.5 m.

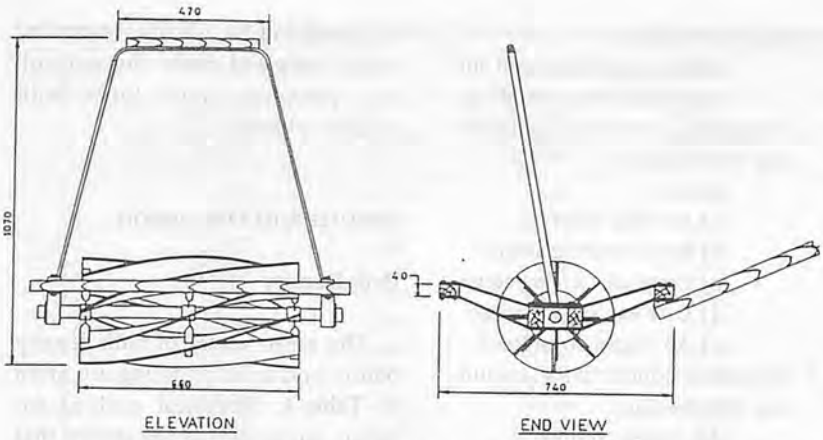

Fig. 1 Helical bladed puddler.

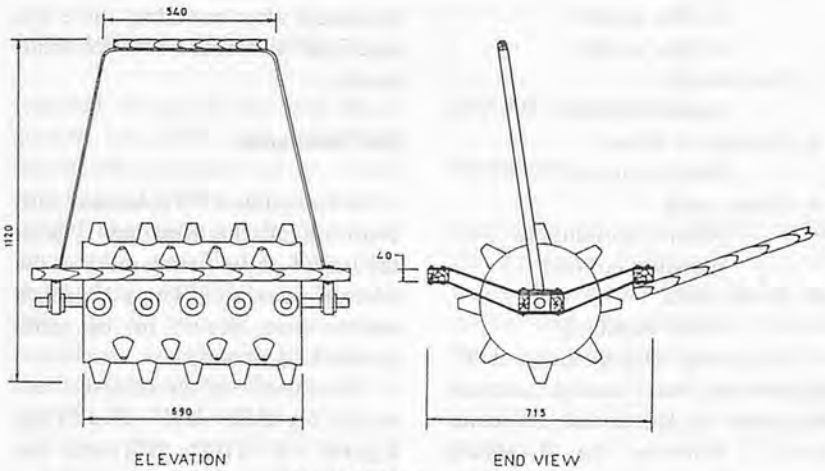

Fig. 2 Sheep foot roller.

Table 2 Mechanical Analysis of Study Soil

Mechanical analysis		Physical properties	
Clay	39.15%	Apparent specific gravity	1.36
Silt	9.32%	Absolute specific gravity	2.43
Find sand	16.26%	Por space	60.12%
Coarse sand	32.78%	Water holding capacity	58.6%

Review of Literature

Philips and Kirkham (1962)[6] found a positive correlation between penetrometer dial gauge value (soil resistance) and grain yield. Sinha (1963)[8] in an experiment on comparison with puddler found no significant difference in yield in statistical analysis. Rane and Varade (1972)[7] employed hydraulic conductivity as an index for evaluating the performance of different puddlers. According to a study by an Indo-Japanese agriculture extension study team (1973) weed growth and percolation loss are important considerations that should not be overlooked in rice cultivation.

Narayana Rao et al (1975)[3] in an experiment on comparison of different puddlers found no significant difference in yield by statistical analysis. Bhusan et al (1979)[1] made a study in silty loam soil and found that weed growth was greater by some 26% in shallow tillage with country plough than in deep tillage with the mouldboard plough. Mathankumar et al (1979)[2] reported that variations in soil water parameter due to change in texture are compensated by bulk density variations. Hence soil resistance, bulk density, surface tension, percolated water loss, hydraulic conductivity, draft and agronomical aspects like weed growth, plant height, number of tillers, grain and straw yield were considered as pertinent parameters for this study.

Measurement of Pertinent Parameters

In each plot five readings were taken for each observation and the mean value was taken for further calculations.

Measurement of soil properties –

a) The bulk density before and after puddling was determined with the use of bulk density cup arrangement.

b) The soil resistance at surface, 10 cm, 20 cm and 30 cm depths before puddling, immediately after puddling and during the time of transplanting was determined with the use of 'Vicksberg penetrometer'.

c) Surface tension in each treatment plot before and after puddling was calculated by following the standard procedure viz., Ring detachment method and by using the relationship $\sigma = Wg/4\pi r$.

σ = surface tension, g/cm
W = load causing detachment, g (net weight)
g = acceleration due to gravity, cm/sec^2
r = mean radius of ring, cm

d) The draft required to pull different implements in all the treatments was measured by using the hydraulic dynamcmeter.

e) In order to calculate the percolation rate in each plot, a fixed datum line was erected by a 'L' shaped steel angle. The constant level was maintained throughout the experiment. On top of the

'L' angle two holes were provided parallel to the ground for fixing the hooke gauge. An 'Altech' hooke gauge was fixed over the datum line and adjusted such that the pointer was just in contact with the water level and the corresponding reading was taken. This procedure was repeated in all plots and continued until irrigation was stopped and the treatment plots became dry. Observations were made on as many days as possible and at a particular time daily.

Particulars of crop cultural practices – Rice variety IR 20 was used for the experiment. Plant spacing was 20 x 10 cm. Fertilizer application, gap filling, weeding, regular plant protection measures and irrigation were done in accordance with the package of practices followed for the crop.

Crop and yield attributes – Weed count was taken using quartet 4 times in each plot, so that the area covered was 1 m^2. This was repeated in five places to take the mean value. Weed count, weed wet weight and dry weight (oven drying) were observed.

The height of plant and number of tillers were measured just before harvest. Grain weight of rice at 14% moisture and straw yield after sun drying were recorded after hand threshing, drying and cleaning.

Statistical Analysis

The statistical analyses were carried out for the following observations:

1. Soil resistance:
   At surface, 10 cm, 20 cm and 30 cm depth
   Stages – Before puddling, after puddling and after transplanting.
2. Bulk density:
   Initial condition and immediately after puddling
3. Surface tension:
   Initial condition and immediately after puddling
4. Hydraulic conductivity, including evaporation:
   Stages
   a) Booting stage
   b) Pre-flowering stage
   c) Early ear setting stage
   d) Late ear setting stage
   e) All stages combined
5. Hydraulic conductivity, excluding evaporation:
   All stages combined
6. Weed growth:
   a) Weed count
   b) Wet weight
   c) Dry weight
7. Plant height:
   Before harvest
8. Number of tillers:
   Before harvest
9. Grain yield:
   After threshing at 14% moisture content
10. Straw yield:
    After threshing

The testing of hypothesis of 'F' distribution was carried out as described by Panse and Sukatme (1967)[5]. Wherever the 'F' values were significant further analysis was carried out as described by Panse and Sukatme (1967)[5].

Input, Output Analysis

The time taken to puddle each plot was noted and hence the input in terms of man-h/ha was calculated. The time taken and hence the cost of ploughing for all the treatments were compared with the control, i.e., ploughing four times with country plough.

Results and Discussion

Bulk Density

The mean values of bulk density before and after puddling are given in **Table 4**. Statistical analysis for initial soil condition has shown that bulk density is not significant between treatments and that immediately after puddling, there was significant difference between treatments.

Soil Resistance

Soil resistance (P) increased with depth in all the treatments. With the use of curve fitting method the relation between P/Pmax Vs depth curves were found to be semi-parabolic in nature.

The initial soil condition treatments T_{13} (VP + HBP + W + SFR), T_{11} (VP + W + HBP + SFR) and T_{11} (VP + W HBP + SFR) showed less soil resistance after puddling at surfaces 10 cm and 20 cm, respectively. Maximum resistance was observed in T_3 (CP + W + HBP), T_3 (CP + W + HBP) and T_7 (CP + W + HBP + SFR) at surface, 10 cm and 20 cm depth, respectively, all of which were CP and its combinations **(Table 3)**. The condition

Table 3 Range of Values of Soil Resistance (kg/cm²)

Depth	Initial soil conditon		Immediately after puddling*		Transplanting stage	
	Min.	Max.	Min.	Max.	Min.	Max.
Surface	0.313 – 0.513		0.060 – 0.240		0.027 – 0.142	
	T_{12}	T_9	T_{13}	T_3	T_5	T_8
10 cm	0.783 – 1.283		0.358 – 0.726		0.137 – 0.667	
	T_4	T_{10}	T_{11}	T_3	T_1	T_6
20 cm	1.810 – 3.013		1.058 – 2.200		0.500 – 2.857	
	T_1	T_8	T_{11}	T_7	T_1	T_6
30 cm	4.000 – 6.367		2,760 – 5.343		1.330 – 7.430	
	T_5	T_2	T_2	T_{13}	T_1	T_6

* Not significant.

Table 4 Bulk Density, Surface Tension, Time, Percolation Loss and Hydraulic Conductivity

Treatment No.	Bulk density (mean)		Surface tension (mean)		Time required	Percolated water mean*	Hydraulic conductivity
	Before* puddling (g/cc)	After** puddling (g/cc)	Before* puddling (g/cm)	After* puddling (g/cm)	(h/ha)	(cm)	(cm/h)
T_1	1.492	1.333	2.605	2.509	122.30	213.37	0.1155
T_2	1.492	1.193	2.079	2.461	92.40	240.33	0.1300
T_3	1.542	1.247	2.748	2.294	71.60	229.23	0.1240
T_4	1.425	1.305	2.509	2.557	71.80	218.97	0.1185
T_5	1.425	1.322	2.507	2.318	51.00	205.73	0.1113
T_6	1.500	1.300	2.916	2.413	108.80	217.63	0.1178
T_7	1.517	1.283	3.465	1.888	85.30	237.20	0.1283
T_8	1.385	1.252	2.366	2.270	82.80	270.90	0.1465
T_9	1.450	1.255	2.653	2.318	106.30	261.47	0.1415
T_{10}	1.433	1.330	2.414	1.959	88.20	222.33	0.1203
T_{11}	1.442	1.277	2.414	1.673	67.40	212.67	0.1151
T_{12}	1.433	1.383	2.270	2.103	67.40	217.67	0.1178
T_{13}	1.492	1.217	2.460	2.103	85.70	216.27	0.1170

* Not significant, ** Significant.

required for good root and shoot growth is that soil resistance should be minimum up to 20 cm and beyond 30 cm, the resistance should be greater in order to reduce the percolation loss. This prerequisite condition is satisfied only in VP and its combination treatments whereas in CP and its combinations the reversal phenomena occured not withstanding the fact that the analysis of variance has shown that there is no significant difference in soil resistance at different depths between treatments.

Comparing both soil resistance and bulk density the following treatments are found better:

1. T_2 (CP + HBP)
2. T_6 (CP + HBP + SFR)
3. T_8 (CP + W + HBP + W + SFR)
4. T_{11} (VP + W + HBP + SFR)
5. T_{13} (VP + HBP + W + SFR)

Surface Tension

Statistical analysis has shown that there is no significant difference in surface tension between treatments (Table 4). The Victory plough and helical bladed puddler with a water application in between gave a minimum value whereas the Victory plough followed immediately by helical bladed puddler gave a maximum value.

Percolation

Percolation is not significant for the different stages and even all stages combined. Between treatments, assuming uniform evaporation and transpiration in all the treatments and its effect over the plots, the percolation was negligible (Table 4).

Considering the effect of evaporation, maximum hydraulic conductivity was observed in T_8 (CP + W + HBP + W + SFR) and minimum hydraulic conductivity for T_5 (VP + W + HBP). Hydraulic conductivity varied from 0.1113 cm/h to 0.1465 cm/h with a mean of 0.1234 cm/h (Table 4).

Draft Measurement

A minimum draft of 27.55 kg was observed with the sheep foot roller and a maximum of 55.10 kg with the country plough.

Time Factor

The time saved in various treatments over country plough varied from 10.98% to 58.23% (Table 4). The treatments which fell above the mean value were T_3 (CP + W + HBP), T_4 (VP + HBP), T_5 (VP + W + HBP), T_{11} (VP + W + HBP + SFR) and T_{12} (VP + W + HBP + W + SFR). Except T_3 (CP + W + HBP) all other combinations were combinations of the Victory plough. Treatments ending with the helical bladed puddler preceded by standing water were better regardless of the initial puddling whether by country plough or Victory plough.

Weed Growth

Weed growth at the 105th day was lower than that of 68th day because of crop establishment (Table 5). The least growth in weed between the months of February and March occured for T_1 (CP). Similarly, T_8 (CP + W + HBP + W + SFR) which had the highest soil resistance, had hardly any weed dry weight in March. Statistical analysis for both the months for weed count, weed wet weight and weed dry weight show that there is no significant difference among treatments.

Plant Height

Statistical analysis show that there was no significant difference in plant height and number of

Table 5 Weed Count, Plant Height, Tillers and Yield

Treatment No.	Weed count 68th day* (Nos.)	Weed count 105th day* (Nos.)	Plant height* (cm)	No. of tillers*	Grain yield* (kg/plot)	Straw yield** (kg/plot)
T_1	60	51	70.2	8	15.7	40.93
T_2	47	46	72.3	10	16.6	43.77
T_3	60	47	65.4	8	11.2	32.60
T_4	50	38	69.6	9	24.4	51.72
T_5	55	60	69.8	9	18.9	46.80
T_6	55	46	66.6	8	22.1	45.27
T_7	69	46	67.2	7	14.9	33.69
T_8	52	22	74.3	8	20.9	49.17
T_9	47	45	64.7	9	19.8	50.30
T_{10}	54	48	65.4	8	16.5	45.80
T_{11}	58	54	71.0	7	21.7	58.90
T_{12}	49	48	64.3	7	18.3	55.93
T_{13}	51	46	67.2	9	20.4	48.20

* Not significant, ** Significant

tillers among different treatments (Table 5).

Grain Yield

Grain yield varied from 1 894 kg/ha for T_3 (CP + W + HBP) from a maximum of 4 130 kg/ha for T_4 (VP + HBP) with a mean of 3 140 kg/ha (Table 5). With respect to yield, there was no significant difference in yield among treatments.

Straw Yield

Straw yield varied from 4.76 t/ha in T_3 (CP + W + HBP) to a maximum of 8.59 t/ha in treatment T_{11} (VP + W + HBP + SFR) with a mean of 6.77 t/ha (Table 5). There was a significant difference among treatments. Treatments T_4 (VP + HBP), T_5 (VP + W + HBP), T_8 (CP + W + HBP + W + SFR), T_9 (CP + HBP + W + SFR), T_{11} (VP + W + HBP + SFR), T_{12} (VP + W + HBP + W + SFR) and T_{13} (VP + HBP + W + SFR) are above mean value. Except treatments T_4 (VP + HBP) and T_5 (VP + W + HBP) all others had a similar treatment as the sheep foot roller.

Comparison Among Treatments

The soil resistance should be low at the surface or at 10 cm to depth but high at 30-cm depths. The bulk density should be as low as possible. Surface tension should be greater at the initial condition. Plant height, grain yield and straw yield should be greater. Weed dry weight and percolation loss should be minimum. Savings in puddling cost should be high compared to country plough expenditure for puddling. Taking the mean values, the treatments satisfying the above conditions the mean or less than the mean (as the case may be) is shown in Table 6.

Conclusion

Considering the different puddled characteristics of soil like soil resistance, bulk density, surface tension, percolated water loss, draft and agronomical aspects like weed growth, plant height, number of tillers, grain yield, straw yield and cost of operation, treatment T_{11} (VP + W + HBP + SFR) was the best treatment among the 13 treatments studied for black clay soil.

(Continued on page 26)

Table 6 Comparison of Various Treatments

Treatment No.	Soil resistance after puddling: Less mean, Surface	Less mean, 10cm	Less mean, 20cm	Above mean, 30cm	Bulk density less mean	Surface tension, above mean	Percolation less-evaporation, less than	Weed dry weight Feb. 83 less mean	Weed dry weight Mar. 83 less than	Plant height above mean	Grain yield above mean	Straw yield above mean	Cost of puddling. Savings over T_1 above mean	Total
T_1	*	*	*	–	–	*	*	*	*	*	–	–	–	8
T_2	*	*	*	–	*	*	–	–	*	*	–	–	–	7
T_3	–	–	–	*	*	*	–	–	*	–	–	–	*	5
T_4	*	*	*	–	–	–	–	*	*	*	*	*	*	9
T_5	*	*	*	–	–	*	*	*	–	*	*	*	*	10
T_6	*	*	*	*	*	*	*	–	–	–	*	–	–	8
T_7	–	–	–	*	*	–	–	–	*	–	–	–	–	3
T_8	*	*	*	–	–	*	*	*	*	*	*	*	–	10
T_9	*	–	–	*	*	*	–	*	*	–	*	*	–	8
T_{10}	–	–	–	*	–	–	*	–	–	–	–	–	–	2
T_{11}	*	*	*	–	*	–	*	*	*	*	*	*	*	11
T_{12}	*	*	–	–	–	–	*	–	*	–	–	*	*	6
T_{13}	*	*	–	*	*	–	*	–	–	–	*	*	–	7

* Satisfying the condition above, the asteriskes refer to the mean or less than the mean as the case may be.

A Methodology for Performance Evaluation of Puddling Implements

by
N.K. Awadhwal
Farming Systems Research Program
ICRISAT
P.O. Patancheru 502324
Andhra Pradesh, India

C.P. Singh
Dept. of Farm Power and Machinery
Punjab Agricultural University
Ludhiana, India

Abstract

A methodology to evaluate the comparative performance of puddling equipment is presented. The expression for performance ratio is based on the quantitative measure of state of puddle and its relationship with the specific energy input for puddling. It compares the performance of puddling implements.

Introduction

In the past, the evaluation of comparative performance of puddling implements was based on several different criteria such as energy requirement, cost of puddling and crop output, reduction in percolation losses, depth of puddle and cone index of the puddled soil (Rao and Sirohi, 1975; Singh et al, 1973; Tyagi et al, 1975). None of these criteria take into account the energy spent in puddling as well as the quantitative indices which adequately quantify the state of puddle. In order to fill in this gap, a methodology for comparative evaluation of the puddling implement has been developed and discussed in this paper.

Development of the Methodology

The degree of puddle is an excellent measure of the loosening and softening of soil that is achieved by puddling which is obtained by subtracting the shear strength ratio from one (Awadhwal and Singh, 1985a). The shear strength ratio (Sr) is defined as the ratio of shear strength of puddled soil (Sp) to the shear strength of non-puddled soil (Snp). The shear strength of the puddled as well as the non-puddled soil should be determined with a vane apparatus operated at shear velocity below 1 cm/sec, as suggested by Evans and Sherratt (1948). The shear velocity below 1 cm/sec, is easily attainable by slow movement of hand with a gear arrangement similar to the one used in the hand operated laboratory vane shear apparatus. The rate effect due to variation in hand movement, while operating the vane shear, would be negligible since the increase in shear strength is below 1% for a unit (1 cm/sec) increase in the shear velocity (Awadhwal and Singh, 1985b).

The specific energy input (E) is the energy consumed in puddling per unit volume of the soil puddled. The shear strength ratio (Sr) bears an exponential relationship with the ratio of specific energy input (E), and the shear strength of non-puddled soil (Snp) can be expressed as:

$$Sr = A \exp [-B (E/Snp)] \quad .....1$$

In the case of zero energy input, no puddling occurs and the value of shear strength ratio will be one, hence the value of the parameter A is one. The value of parameter B is proportional to the efficiency with which the puddler utilizes the energy for puddling which can be expressed as:

$$B = \eta/k \quad .....2$$

Where η is efficiency of puddler in utilizing energy for puddling and k is the constant of proportionality that depends upon the susceptibility of soil to puddling. Substituting the value of B in Eq. 1, it can be written as:

$$Sr = \exp [-(\eta/k)(E/Snp)] \quad .....3$$

If the amount of specific energy input is such that the value of the exponent becomes one then, we can write:

$$k = \eta E/Snp \quad .....4$$

The constant k is called puddleability of the wet soil and can be defined as the ratio of the specific energy utilized to bring down the shear strength ratio (Sr) to 1/e or 0.367, and the shear strength of non-puddled soil.

The performance of two puddling implements can be best compared in terms of their efficiency for utilizing the energy for puddling the soil. Assuming that two puddling implements having efficiencies

η_1 and η_2 are used to puddle a wet soil with puddleability k and shear strength Snp. Let E_1 and E_2 be the specific energy consumed by those implements for puddling and Sp_1 and Sp_2 be the shear strength of puddled soil beds. Making appropriate substitutions in Eq. 3, we can write:

$$Sr_1 = \exp\,[-(\eta_1/k)(E_1/Snp)] \quad .....5$$

$$Sr_2 = \exp\,[-(\eta_2/k)(E_2/Snp)] \quad .....6$$

Taking the ratio of the logarithms of the above equations, we can write:

$(\text{In } Sr_1)/(\text{In } Sr_2) = (\eta_1 E)/(\eta_2 E)$

or

$$\eta_1/\eta_2 = (E_2 \text{ In } Sr_1)/(E_1 \text{ In } sr_2) \quad .....7$$

The left hand side of the above equation represents the ratio of efficiencies of the two puddlers hence it is a measure of their comparative performance. It is called performance ratio (PR) and can be expressed as:

$$PR = (E_2 \text{ In } Sr_1)/(E_1 \text{ In } sr_2) \quad .....8$$

The performance ratio accounts for both the energy consumed by implements as well as the reduction in shear strength of soil achieved by puddling. Its numerical value can be interpreted as follows: Suppose that the value obtained from Eq. 8 is 1.3, then it would imply that implement one is 30% more efficient than implement two.

Conclusion

A comparative performance of puddling implements can be evaluated by measuring their specific energy consumption for puddling and the shear strength ratio of the puddled soils and then computing the performance ratio from Eq. 8.

REFERENCES

1. Awadhwal, N.K. 1980. Investigagation of dynamic behaviour of puddled soil. Ph.D. Thesis (unpub.), Punjab Agricultural University, Ludhiana, India.
2. Awadhwal, N.K., and Singh, C.P. 1985a. Characterization of puddled soil. J. Agric. Engng., 22(1): 9–14.
3. Awadhwal, N.K. and Singh, C.P. 1985b. Mechanical and viscoelastic characteristics of puddled soil. Tillage Machinery Systems as Related to Cropping Systems: Proceedings of the International Conference on Soil Dynamics, 17–19 July 1985. Auburn University, USA. Vol. 3:471–480.
4. Evans, I. and Sherratt, G.G. 1948. A simple and convenient instrument for measuring the shear resistance of clay soil. J. Scientific Instruments 25: 411–414.
5. Rao, P.V.N., and Sirohi, B.S. 1975. Comparative study of improved puddlers. J. Agric. Engng. 12(3–4):21–23.
6. Singh, K.N., Bachchan Singh, and Bhagwan Singh. 1973. Performance studies on various puddling equipment. J. Agric. Engng. 10(5–6):14–18.
7. Tyagi, N.K. Acharya, N., and Mohanti, P.C. 1975. Effect of puddling implements on percolation losses and water use efficiency in rice fields. Ind. J. Agric. Sci. 45(3):132–135. ■■

(Continued from page 24)

Puddled Characteristics of Soil with Selected Implements

REFERENCES

1. Bhusan, L.S., Chauhan and Sumerchand. 1979. Influence of tillage and simazine on weed growth. Ind. J. Soil Sci. 27 (2): 158-160.
2. Mathankumar, N., Raman, K.V., Subba Rao, I.V. and Venkaramiah, C.H., 1979. Soil water transmission parameters and their functional relationships of some soils of college farms of Rajendranagar and Bapatla. The Andhra Agri. J. 26 (5 & 6): 153-159.
3. Narayana Rao, P.V. and Sirohi, B.S., 1975. Comparative study of improved puddlers. J. Agri. Engg. 12 (3-4): 21-23.
4. National Commission on Agriculture, 1976. Irrigation. Govt. of India publication abridged report: 194-196.
5. Panse, G.V. and Sukatme, P.V., 1967. Statistical methods for agricultural workers, ICAR, New Delhi. Ed. 2.
6. Philips, R.E. and Kirkham, D., 1962. Soil compaction in the field and corn growth. Agr. Jour. 54: 29-33.
7. Rane, D.B. and Varade, S.B., 1972. Hydraulic conductivity as an index for evaluating the performance of different puddlers. J. Agri. Engg. IX (1): 11-16.
8. Sinha, M.P., 1963. A study of the measurement of puddling and comparative study of different implements for puddling in rice cultivation. The Agri. Engg. 9: 41-44. ■■

Comparative Performance of Four-wheel Tractor and Two-wheel Tractor in Small Plots

by
Md. Wali Ullah
Asst. Prof.
Dept. of Agric. Engg. and
Basic Engineering
Bangladesh Agric. Univ.
Mymensingh, Bangladesh

S.S. Kofoed
Prof.
Inst. of Agric. Engg.
Royal Veterinary and
Agric. Univ.
Copenhagen, Denmark

T.T. Pedersen
Prof.
Inst. of Agric. Engg.
Royal Veterinary and
Agric. Univ.
Copenhagen, Denmark

Abstract

The performance of a four-wheel tractor and a two-wheel tractor was compared for small plots ranging from 0.25 ha to 4 ha of different shapes from the perspective of time consumption, fuel consumption, energy consumption, quality of tillage and cost of tillage. The objective was to determine the superiority of one tractor over another for small plots. The two-wheel tractor under study consumed about 41% more fuel than the four-wheel tractor for an average plot size of 1 ha. On the other hand, for a plot size of 0.25 ha the four-wheel tractor consumed 5% more energy than the two-wheel tractor which is expected to be higher for smaller holdings. From the viewpoint of quality of tillage both tractors gave equally good rotary tilling. However, the cost analysis shows that it is not economical to work a plot smaller than 0.6 ha with a four-wheel tractor in Bangladesh.

Introduction

The rotary tillage with hand tractors was started in Japan around 1950 and showed that it achieved both plowing and harrowing in the same pass of the machine on the field (Sakai, 1987). Currently, rotary tillage is enjoying a popularity in mechanized rice cultivation. The underlying significance of using rotary tillers is reduced tilling energy for deep tillage (Kawamura and Shibusawa, 1980). At present riding tractors with rotary tillers are becoming as popular as the power tillers (Sakai, 1977). The general efficiency of field operation for both two-wheel and four-wheel tractors is not only a question of power but also related to the accessibility, size and shape of the field as well as the distance from farm to field and field to field (Krause, 1980).

Field operations can be achieved with various combinations of machines which result in different basic energy requirements. Hence, from the increasing range of sizes, types and capacities of tractor implements the farmer needs to select appropriate tractor implement systems and operate them in the most energy-efficient manner. Hanna et al (1979) conducted tests in field conditions with a four-wheel 48 kW and two-wheel 13 kW tractor for Egyptian conditions and concluded that the four-wheel tractor is not suitable for plot sizes less than 0.42 ha. Lee (1972) suggested that the optimum size of power unit required for a country should be determined by the farming methods and the gross national product of the country. Data on the suitable ratio between plot size and size of tractor and implement are still inadequate. Hence, the present study sought to compare the performance of a two-wheel tractor and a four-wheel tractor. The objective is to determine the superiority of one tractor over another for rotary tillage in small and fragmented holdings in rice farming.

Machinery and Implements

A rotary cultivator equipped with standard rigid L-shaped blades mounted on a 25 kW four-wheel tractor and one 8 kW two-wheel tractor equipped with a rotary tiller were used during the field tests. The width of tillage of the rotary cultivator was 107 cm with 3 right-hand and 3 left-hand blades per flange except for the end flanges which carried only 3 blades each. The depth could be controlled by adjustable land wheel and the depth limit skid by rachet clamps to a maximum of 20 cm. The width of tillage of the rotary tiller (used for the 2-wheel tractor) was 58.5 cm with 2 right-hand and 2 left-hand L-shaped blades on each of the four flanges. The depth could be adjusted by a depth con-

trol lever. The maximum depth was 9 cm for the first tilling operation.

A gasoline fuel meter, to measure the fuel consumption for the test runs, was mounted on each of the tractors. A DC electric transmission-type cradled dynamometer was used in the laboratory to measure the power output at the PTO shaft of both tractors at different levels of fuel consumption and throttle settings.

Experimental Procedure

Field Tests

The experiments were conducted in the vicinity of the Institute of Agricultural Engineering, Taastrup, Copenhagen, Denmark. Field tests were done for a length of 50 m for the four-wheel tractor and 25 m for the two-wheel tractor. For each test run, fuel consumption, time consumption and tillage depth were recorded. Two test runs were given at the adjoining strip and similar data were recorded. For calculation, the average of these two runs was used.

The data collected were then used to calculate the time consumption, fuel consumption and energy consumption in small plots ranging from 0.25 ha to 4 ha of different geometrical configurations (**Fig. 1**) for each of the tractors. For every plot two values of each of the performance factors were found considering the lengthwise and widthwise operations. Of the various forward speeds and tillage depths obtained in the field, only the optimum value has been considered for comparison of the two tractors. The values of the forward speeds were 1 m/s for the four-wheel tractor and 0.38 m/s for the two-wheel tractor with a corresponding tillage depth of 8.5 cm each. The turning time at these speeds was 10 s per turn for the four-wheel tractor and 5 s for the two-wheel tractor. The fuel consumption rates at these speeds and depth were 7.80 *l*/h and 2.29 *l*/h for the four-wheel and two-wheel tractors, respectively. An analysis of the costs of tillage in one pass for both tractor was made.

Classification of Soil

The soil samples from the experimental plots were collected for texture analysis at the laboratory using the hydrometer method. The following are the results of the hydrometer analysis:

Coarse sand	26%
Fine sand	44%
Silt	12%
Clay	18%
Soil type	Sandy loam

Results and Discussion

Time Consumption

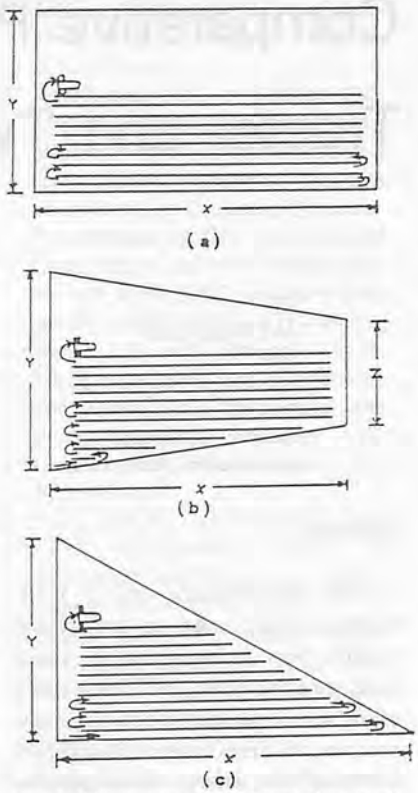

Fig. 1 Dimensions of different shapes of plots considered; a) Rectangular, b) Trapezoidal and c) Triangular.

The width of machine and the forward speed are two main factors on which the working time on a plot depends. Machines mounted on bigger power units can be operated at higher forward speeds even with a greater width of cut. Both factors contribute to a lower consumption of time. On the other hand, smaller power units can neither be operated at higher forward speed nor can they be coupled with a wider machine. As a result,

Table 1 Total Field Time to Cultivate Different Sizes of Plots in One Pass with a Four-wheel Tractor

Plot shape	y/x ratio	Total time, h				
		0.25 ha	0.5 ha	1 ha	2 ha	4 ha
Triangular	1/2	0.78	1.48	2.86	5.56	10.90
	2	0.91	1.66	3.12	5.92	11.42
Rectangular	1/2	0.74	1.43	2.78	5.45	10.75
	2	0.84	1.56	2.96	5.71	11.12
Trapezoidal	1/2	0.72	1.41	2.75	5.41	10.68
	2	0.80	1.51	2.90	5.62	10.99

Table 2 Total Field Time to Cultivate Different Sizes of Plots in One Pass with a Two-wheel Tractor

Plot shape	y/x ratie	Total time, h				
		0.25 ha	0.5 ha	1 ha	2 ha	4 ha
Triangular	1/2	3.27	6.47	12.84	25.55	50.89
	2	3.39	6.64	13.09	25.89	51.37
Rectangular	1/2	3.24	6.42	12.78	25.45	50.75
	2	3.32	6.54	12.94	25.69	51.09
Trapezoidal	1/2	3.22	6.40	12.74	25.40	50.69
	2	3.29	6.50	12.88	25.60	50.97

the total time consumption will be greater when smaller power units are used.

A comparison of the total time consumption of the two tractors is shown in **Tables 1** and **2**. From the tables it will be shown that the total time required to work 4 pieces of 0.25 ha plots is about 3 h for the four-wheel tractor and about 13 h for the two-wheel tractor.

Fuel Consumption

The fuel consumption per hectare (*l*/ha) varied inversely with the forward speed for the four-wheel tractor and directly with the forward speed for the two-wheel tractor. Hence, it is preferable that four-wheel tractors be operated at an acceptable higher forward speed and the two-wheel tractors at an acceptable lower forward speed to minimize fuel consumption per hectare. In both cases, the speed limit may be determined by the nature of operation and soil condition.

A comparison of the fuel consumption per hectare for both tractors is shown in **Tables 3** and **4**. The average fuel consumption of the four-wheel tractor and the two-wheel tractor was about 30.5 *l*/ha and 28.9 *l*/ha, respectively. The difference in fuel consumption of the two tractors is highly significant. As such, it may be concluded that the two-wheel tractor consumed about 41% more fuel than the four-wheel tractor to work at a depth of 8.5 cm.

Energy Consumption

A comparison of the energy required to work a certain plot is shown in **Tables 5** and **6**. The four-wheel tractor needs about 5% more energy than the two-wheel tractor in plowing a 0.25-ha plot.

The difference in energy requirement decreases with the increase in plot size. Similarly, the difference will further increase if the plot size is less than 0.25 ha. This indicates that more energy is spent when smaller holdings are worked with bigger power units. Hence, it is suggested that small-sized plots better worked with small tractors.

Quality of Tillage

The qulity of tillage from the viewpoint of soil pulverization and stubble mixing was observed for both tractors during the field tests. For the four-wheel tractor the tilth was better at lower forward speeds with the rear shield of the rotary cultivator lowered.

The quality of tillage for the two-wheel tractor was fine for all speeds used in the field. Incorporation of stubble was very satisfactory. Thus, from the viewpoint of quality of tillage there was no difference in the performance of the two tractors.

Table 3 Fuel Consumption of Four-wheel Tractor in Different Plots

Plot shape	y/x ratio	Fuel consumption, *l*/ha				
		0.25 ha	0.5 ha	1 ha	2 ha	4 ha
Triangular	1/2	5.17	10.27	20.45	40.79	81.40
	2	5.27	10.41	20.67	41.07	81.81
Rectangular	1/2	5.14	10.23	20.40	40.70	81.29
	2	5.21	10.33	20.53	40.90	81.57
Trapezoidal	1/2	5.12	10.21	20.37	40.67	81.23
	2	5.18	10.29	20.49	40.83	81.47

Table 4 Fuel Consumption of Two-wheel Tractor in Different Plots

Plot shape	y/x ratio	Fuel consumption, *l*/ha				
		0.25 ha	0.5 ha	1 ha	2 ha	4 ha
Triangular	1/2	7.24	14.47	28.92	57.80	11.56
	2	7.27	14.51	28.97	57.88	115.67
Rectangular	1/2	7.23	14.46	28.90	57.78	115.53
	2	7.25	14.49	28.94	57.83	115.60
Trapezoidal	1/2	7.23	14.45	28.89	57.77	115.51
	2	7.25	14.48	28.93	57.81	115.58

Table 5 Energy Requirement by Four-wheel Tractor in Different Plots

Plot shape	y/x ratio	Energy requirment, kW h				
		0.25 ha	0.5 ha	1 ha	2 ha	4 ha
Triangular	1/2	10.33	20.54	40.91	81.58	162.80
	2	10.53	20.82	41.31	82.15	163.61
Rectangular	1/2	10.27	20.45	40.79	81.41	162.57
	2	10.41	20.66	41.06	81.81	163.14
Trapezoidal	1/2	10.24	20.42	40.74	81.34	162.47
	2	10.36	20.58	40.98	81.67	162.94

Table 6 Energy Requirement by Two-wheel Tractor in Different Plots

Plot shape	y/x ratio	Energy requirment, kW h				
		0.25 ha	0.5 ha	1 ha	2 ha	4 ha
Triangular	1/2	9.96	19.90	39.78	79.51	158.95
	2	10.00	19.96	39.85	79.62	156.10
Rectangular	1/2	9.95	19.89	39.75	79.48	158.91
	2	9.98	19.93	39.81	79.55	159.02
Trapezoidal	1/2	9.95	19.88	39.74	79.46	158.98
	2	9.97	19.91	39.79	79.53	158.98

Cost of Operation

Apart from the factors compared, the cost of operation may be considered as the best determinant to choose the size of a tractor for small-sized plots. Towards this end, a cost analysis was made to evaluate the suitability of both tractors in small sized plots.

It was not economical to work a plot smaller than 0.6 ha with the four-wheel tractor. There was a small difference between the costs of operation of both the tractors for 1 ha plot, i.e., with an acceptable higher cost of operation power tillers can be used to work plots up to 1 ha. But plot sizes larger than 1 ha will not be economical for the power tillers. Thus, two-wheel tractors may be considered economical for tillage operations in small-sized plots.

Conclusion

The results obtained by comparing the performance factors show that two-wheel tractors were time consuming than the four-wheel tractors and as such are not economical in regions of higher cost of labour. The difference in fuel consumption of the two tractors was highly significant which was about 41% more for the two-wheel tractor than the four-wheel tractor for a plot of 1 ha. On the other hand, four-wheel tractors consume more energy than two-wheel tractors in small plots. The two tractors may be considered equally suitable from the viewpoint of quality of tillage. For Bangladesh, it is not economical to work a plot smaller than 0.6 ha with a four-wheel tractor. To the contrary, plot sizes bigger that 1 ha sould neither be worked with two-wheel tractors.

REFERENCES

Hanna, G.B., Maksoud, S.E.A. and Wahals, M.K.A. 1979: Effect of field size on machine field efficiency and ploughing costs. Agricultural Mechanization in Asia. Autumn, Vol. 10 (4): 42-46;

Kawamura, N. and Shibusawa, S. 1980: Studies on deeper rotary tillage (Part – 1) model test of tilling with two blades. The Journal of the Society of Agricultural machinery, Japan, Vol. 42, No. 2.

Krause, R. 1980: Tillage and energy demand: Irrigated Crop Production in Semi-Arid and Arid Regions. Journal of the Agricultural Mechanization in Asia. Vol. 12 (2): 17-22.

Lee, C.C. 1972: The Merry tiller as a practical farm machine for Korea. Journal of the Agricultural Mechanization in Asia. Vol. 3 (3): 47.

Sakai, J. 1977: Developments of agricultural machinery for Japanese rice cultivation and farming structure. Journal of the Agricultural Mechanization in Asia. Vol. 8 (4): 66-78.

Sakai, J. 1978: Designing Process and Theories of Rotary Blades for Better Rotary Tillage (Part 1). JARQ Vol. 12, No. 2: 86-93.

Ullah, M.W. 1983: An Investigation into the Energy and Labour Consumptions for Rotary Tillage in Small-Sized plots Using 2-wheel and 4-wheel Tractors. Ph.D. Dissertation published by the Institute of Agricultural Engineering, Royal Veterinary and Agricultural University, Copenhagen, Denmark, Meddelelse Nr. 41.

Simplified Approach for Evaluating Longitudinal Stability of Agricultural Tractors

by
Janardan Prasad
Sr. Scientist
Central Institute of
Agric. Engg.
Nabi Bagh, Berasia Road
Bhopal 462018, India

Gopal Lal Meena
Test Engineer
Government of India
Central Farm Machinery
Training and Testing Inst.
Tractor Nagar, Budni 466445, India

Abstract

Tractor accidents due to overturns on sloping ground arise either due to lack of stability or control loss. The location of centre of gravity plays a vital role in stability performance of a tractor. The tangent of the ratio between the distance of the centre of gravity ahead of rear axle centre line and height of centre of gravity is defined as the static stability angle and signifies the angle of the maximum gradient which a tractor can negotiate in the longitudinal direction without any external load, when the weight of the front wheels on the ground becomes zero. Likewise, the angle of maximum inclination which the tractor may ascend under maximum drawbar load measured as the weight of the front wheels on the ground becomes zero, is defined as the critical angle of dynamic stability. To evaluate the longitudinal stability of tractors, an analysis has been presented in this paper. It has been established that the critical angle of dynamic stability is a function of the traction coefficient (μ), distance of centre of gravity ahead of rear axle centre line (L_{cg}), height of centre of gravity (H_{cg}) and drawbar height (H). The effect of drawbar height to centre of gravity height ratio (h) and the ratio of drawbar pull to total tractor weight (p) on the critical angle of dynamic stability is analysed. The paper also provides the effect of position of hitch point and angled drawbar pull on the critical angle of dynamic stability.

Introduction

The majority of serious accidents with tractors is due to the vehicle turning over sideways or backwards. It is important to understand the factors governing overturning of tractors. Accidents resulting in tractor overturns on sloping ground arise either due to lack of stability or control loss and occur because the driver attempts to use the machine on slopes that exceed the limits of operation of the machine. A control loss occurs when the wheel ground forces in the plane of the ground are no longer sufficient to maintain equilibrium. A stability loss occurs when the normal to ground wheel load becomes zero. Analysis of stability aspects has been attempted by many engineers. Some of the testing organizations are also performing measurement of stability limits.

In India, about 40 models of tractors are being manufactured in the horsepower range of 15 to 75 and the annual production has gone over 80 000 units. The tractors are tested in accordance with the relevant Indian Standards at the Central Farm Machinery Training and Testing Institute, Budni. The measurement of stability limits is not a part of the regular testing programme. However, measurements of three co-ordinates of the position of centre of gravity from a part of the testing programme. Taking into consideration the broad specifications and position of centre of gravity, an analysis has been presented to predict the critical angle of the dynamic stability in the longitudinal plane based on theoretical considerations stipulated by Sack (4).

Theoretical Considerations

The hazard of upsetting the tractor happens when the angle of inclination of the ground upon which the tractor is operated becomes greater than the critical angle of dynamic stability. This is defined as the angle of the maximum inclination at which the tractor may ascend under maximum drawbar load, measured as the mass of the front wheels on the ground becomes zero. The longitudinal stability of wheeled tractors may be analysed by considering the tractor

as a 'free body' (Fig. 1).

The following assumptions apply at the moment the tractor becomes unstable.

i) There is no weight on the front wheeels, hence Wnf = 0.
ii) Since Wnf = 0, there is no rolling resistance at the front wheels and therefore R = 0.
iii) The tractor is considered to be on a hard surface so that the reaction on the rear wheels is directly beneath the rear axle centre and at the contact surface. Digging-in of rear wheels as a result of slippage is neglected.
iv) There is sufficient amount of torque available at the rear axle so that the drawbar pull is limited only by the value of the traction co-efficient and mass of the tractor.
v) Drawbar pull is parallel to the ground and is the maximum possible value for considering the moment of stability and unstability:

Referring to **Fig. 1** and considering the moment of stability and unstability:

$$P_1 H = W \cos\beta\, L_{cg} - W \sin\beta\, H_{cg}$$

$$= W (L_{cg} \cos\beta - H_{cg} \sin\beta) \quad \ldots\ldots\ldots\ldots (1)$$

where,

$$P_1 = \mu W_{nr} - W \sin\beta - R \quad \ldots\ldots (2)$$

Further, by taking moment about front support, we obtain,

$$W_{nr} W_b = P_1 H + W \cos\beta\, L_2 + W \sin\beta\, H_{cg}$$

Since $L_2 = W_b - L_{cg}$

$$W_{nr} W_b = P_1 H + W \cos\beta (W_b - L_{cg}) + W \sin\beta\, H_{cg}$$

$$W_{nr} = \frac{P_1 H}{W_b} + W \cos\beta - \frac{W \cos\beta\, L_{cg}}{W_b} + \frac{W \sin\beta\, H_{cg}}{W_b}$$

Since $L_{cg} \cos\beta = H_{cg} \sin\beta$

$$W_{nr} = \frac{P_1 H}{W_b} + W \cos\beta \quad \ldots\ldots\ldots (3)$$

Substituting the value of W_{nr} in equation (2), we get

$$P_1 = \mu \left(\frac{P_1 H}{W_b} + \cos\beta\right) - (W \sin\beta + R)$$

$$= \frac{\mu P_1 H}{W_b} + \mu W \cos\beta - (W \sin\beta + R)$$

$$\text{or } P_1 - \frac{\mu P_1 H}{W_b} = \mu W \cos\beta - (W \sin\beta + R)$$

$$\text{or } P_1 \frac{(W_b - \mu H)}{W_b} = \mu W \cos\beta - (W \sin\beta + R)$$

$$\text{or } P_1 = \frac{\mu W \cos\beta\, W_b}{W_b - \mu H} - \frac{W_b (W \sin\beta + R)}{W_b - \mu H}$$

$$\frac{\mu W \cos\beta (L_2 + L_{cg})}{W_b - \mu H} - \frac{W_b (W \sin\beta + R)}{W_b - \mu H}$$

$$\frac{\mu W (L_2 \cos\beta + L_{cg} \cos\beta)}{W_b - \mu H} - \frac{W_b (W \sin\beta + R)}{W_b - \mu H}$$

Substituting $L_{cg} \cos\beta = H_{cg} \sin\beta$ and R = 0

$$P_1 = \mu W (L_2 \cos\beta + H_{cg} \sin\beta) - W_b W \sin\beta / W_b - \mu H \quad \ldots (4)$$

where,

W = Operating mass of tractor
β = Angle of gradient
L_{cg} = Distance of centre of gravity ahead of rear axle centre line
H_{cg} = Height of centre of gravity above ground level
L_2 = Distance of centre of gravity rear of the front axle centre line
W_b = Wheel base
W_{nr} = Normal ground reaction at rear wheels
W_{nf} = Normal ground reaction at front wheels
F_t = Tractive effort
H = Height of drawbar above ground level
μ = Coefficient of traction
P_1 = Drawbar pull

from equation (1) and (4), we get,

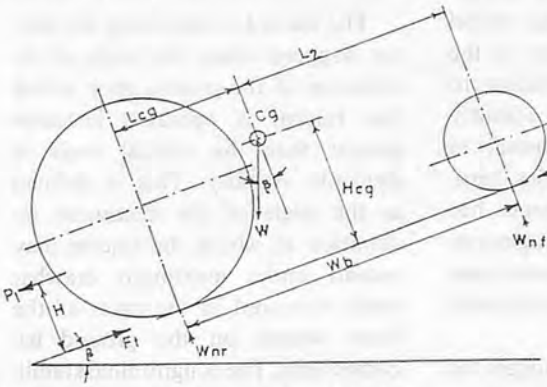

Fig. 1 Free body diagram of wheeled tractor on a gradient.

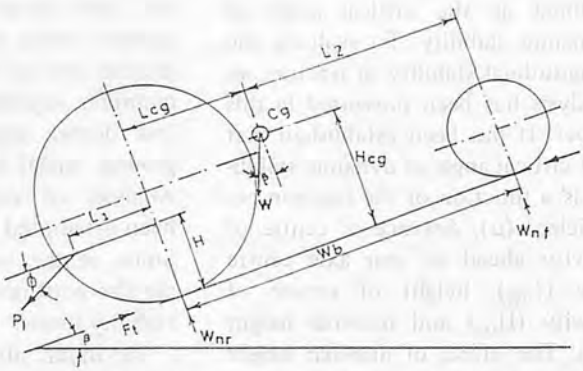

Fig. 2 Free body diagram of wheeled tractor on a gradient with angled drawbar pull.

$$W(L_{cg}\cos\beta - H_{cg}\sin\beta)$$

$$= [\mu W(L_2\cos\beta + H_{cg}\sin\beta) - W_b W\sin\beta/W_b - \mu H]\,H$$

$$\text{or } \frac{L_{cg}\cos\beta}{H} - \frac{H_{cg}\sin\beta}{H}$$

$$= \frac{\mu L_2\cos\beta}{W_b - \mu H} + \frac{\mu H_{cg}\sin\beta}{W_b - \mu H}$$

$$- \frac{W_b\sin\beta}{W_b - \mu H}$$

Dividing the above expression by $\cos\beta$, we get:

$$- \frac{L_{cg}}{H} - \frac{H_{cg}\tan\beta}{H} = \frac{\mu L_2}{W_b - \mu H}$$

$$+ \frac{\mu H_{cg}\tan\beta}{W_b - \mu H} - \frac{W_b\tan\beta}{W_b - \mu H}$$

$$\text{or } \frac{\mu H_{cg}\tan\beta}{W_b - \mu H} + \frac{H_{cg}\tan\beta}{H}$$

$$- \frac{W_b\tan\beta}{W_b - \mu H} = \frac{L_{cg}}{H} - \frac{\mu L_2}{W_b - \mu H}$$

$$\text{or } \tan\beta\,(\mu H H_{cg} + W_b H_{cg} - \mu H H_{cg} - W_b H) = W_b L_{cg} - \mu H L_{cg} - \mu H L_2$$

$$\text{or } \tan\beta\,(W_b H_{cg} - W_b H) = W_b L_{cg} - \mu H L_{cg} - \mu H L_2$$

$$\tan\beta = \frac{W_b L_{cg} - \mu H L_{cg} - \mu H L_2}{W_b(H_{cg} - H)}$$

Since $L_2 = W_b - L_{cg}$

$$\tan\beta = \frac{W_b L_{cg} - \mu H L_{cg} - \mu H(W_b - L_{cg})}{W_b(H_{cg} - H)}$$

$$\text{or } \tan\beta = \frac{L_{cg} - \mu H}{H_{cg} - H} \quad \ldots\ldots\ (5)$$

Thus, it can be seen that the critical angle of dynamic stability is a function only of the traction coefficient, position of centre of gravity with respect to the ground and rear axle centre line and the height of the drawbar above the ground.

The equation (5) covers the entire theoretical range. However, only a limited part of this theoretical range represent actual conditions. In order to make use of equation (5) in a better way it can be rewritten after introducing the following terms:

$$\tan\beta_{static} = \frac{L_{cg}}{H_{cg}}$$

$$h = \frac{H}{H_{cg}}$$

$$\tan\beta = \frac{L_{cg} - \mu H}{H_{cg} - H}$$

$$= \frac{L_{cg} - \mu H}{H_{cg}} \Big/ \frac{H_{cg} - H}{H_{cg}}$$

$$\text{or } \frac{L_{cg}}{H_{cg}} - \frac{\mu H}{H_{cg}} \Big/ 1 - \frac{H}{H_{cg}}$$

$$\text{or } \tan\beta = (\tan\beta_{static} - \mu H)/(1 - h) \quad \ldots\ldots\ (6)$$

It is important to express the ratio between drawbar pull and total tractor weight in terms of coefficient of traction (μ) and angle β.

$$P_1 = \mu W n r - W\sin\beta - R$$

when the tractor becomes unstable,

$$P_1 = \mu W\cos\beta - W\sin\beta$$

$$\text{or } \frac{P_1}{W} = \mu\cos\beta - \sin\beta$$

$$= (\mu - \tan\beta)\cos\beta = p \quad \ldots\ (7)$$

The above analysis is based on the assumption that the pull on the drawbar is parallel to the ground. This assumption holds true for the conditions where the tractor pulls a trailer or similar equipments which has hitch located at the same height as the drawbar.

However, in many situations the drawbar pull is not parallel to the ground. Since the hitch point on the tractor is normally located behind the rear axle, the vertical component of the drawbar pull will decrease the critical dynamic stability angle.

Considering ϕ as the angle between direction of drawbar pull and the operating surface and L_1 as the distance of tractor hitch point behind the rear axle (**Fig. 2**) equation (4) and (5) can be rewritten as:

$$P_1 = \frac{W(\mu\cos\beta - \sin\beta)}{\cos\phi - \mu\sin\phi}$$

$$\tan\beta = L_{cg}(\cos\phi - \mu\sin\phi) - \mu(H\cos\phi + L_1\sin\phi)\,/\,H_{cg}(\cos\phi - \mu\sin\phi) - \mu(H\cos\phi + L_1\sin\phi) \quad \ldots\ldots\ (8)$$

$$\tan\beta = \frac{\tan\beta_{static} - \mu h'}{1 - h'} \quad \ldots\ (9)$$

where,

$$\tan\beta_{static} = \frac{L_{cg}}{H_{cg}}$$

$$h' = \frac{H + L_1\tan\phi}{H_{cg}(1 - \mu\tan\phi)}$$

The equation (7) is quite useful in predicting tractor-stability characteristic. It can be seen from the analysis presented in this equation that the critical angle of dynamic stability for any tractor is a function of traction coefficient. Thus, one tractor has many critical stability angles depending upon the traction conditions of the surface on which it is operated.

Fig. 3 illustrates one situation in which the front wheels of the tractor have been raised off the ground. The tractor is operated on a slope with the angle β and the angle between the tractor and the surface is α. This situation can be conveniently analysed by assuming the drawbar pull parallel to the ground

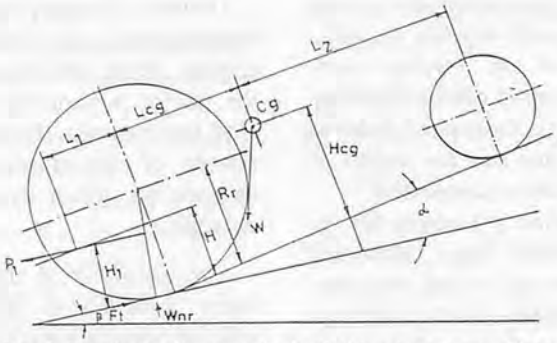

Fig. 3 Free body diagram of wheeled tractor on a gradient with front wheels raised off the ground.

inspite of the fact that the tractor hitch point is lowered down as a result of raising of front wheels. The moment of the forces causing stability and instability can be worked out separately.

$$M_1 = W\,[L_{cg}\cos(B+\alpha) - (H_{cg} - R\gamma)\sin(B+\alpha) - R\gamma\sin\beta)] \quad \ldots\ldots(10)$$

$$M_2 = P_1 H_1$$

$$H_1 = R\gamma - (R\gamma - H)\cos\alpha - L_1\sin\alpha$$

$$P_1 = \mu W_{nr} - W\sin\beta = \mu W\cos\beta - W\sin\beta$$

$$M_2 = P_1\,[R\gamma - (R\gamma - H)\cos\alpha - L_1\sin\alpha]$$

where,

R_r = Rolling radius of rear wheels

H_1 = Height of tractor hitch point above ground

α = Angle between tractor and ground surface

L_1 = Distance between hitch point and rear axle centerline

M_1 = Moment of stability

M_2 = Moment of instability

Results and Discussion

Static Stability Angle

The measurement of the position of the centre of gravity is included in the regular testing programme on agricultural tractors and forms part of the test reports released by testing institutes. The location of centre of gravity of various agricultural tractors manufactured in India as measured on unballasted tractor with driver replaced by a 75 kg mass on the driver's seat are presented in **Table 1**. The static stability angle as calculated in accordance witht the analysis presented earlier are given in the same table for a few selected tractors in the various horsepower ranges. As it can be seen, the static stability angle varies from 34.4° to 44.8°. Since the static stability angle depends solely upon the location of centre of gravity, it is fixed for a particular tractor with reference to its ballast condition. Ballasting of the tractor at the rear will reduce the value of L_{cg}, hence the static stability angle.

Critical Angle of Dynamic Stability

As already explained, the dynamic stability angle refers to the angle of maximum inclination at which the tractor may ascend under maximum drawbar load, measured as the weight at the front wheels on the ground becomes zero. The critical angle of dynamic stability is presented in simplified from in equation (5). It can be seen that the critical angle of dynamic stability

Table 1 Static Stability Angle of Selected Agricultural Tractors Based on Measurement of Location of Centre of Gravity

Classification of tractor based on pto horsepower PS	Mass of tractor without operator and ballast (kg)			Wheel base (mm)	Location of centre of gravity		Static stability (degree)
	Front	Rear	Total		Height (mm)	Distance forward from rear axle (mm)	
Below 15	530	930	1 460	1 704	875.0	599.0	34.4
	565	940	1 505	1 660	651.4	637.2	44.4
15 to 25	610	970	1 580	1 810	703.7	670.6	43.6
	580	1 120	1 700	1 855	799.8	629.1	38.2
	675	1 020	1 695	1 880	747.0	724.0	44.1
	635	1 020	1 655	1 780	683.5	615.6	42.0
	620	1 040	1 660	1 895	737.0	688.0	43.0
25 to 35	670	1 030	1 700	1 940	743.7	737.7	44.8
	680	1 100	1 780	1 870	806.0	743.4	42.8
35 to 45	865	1 250	2 115	1 968	830.9	811.5	44.3
	710	1 090	1 800	1 994	805.5	745.8	42.8
	745	1 255	2 000	1 963	829.0	710.0	40.6
	960	1 610	2 570	2 220	847.5	803.9	43.5
	680	1 110	1 790	1 903	769.2	680.7	41.5
	737	1 366	2 103	2 120	795.7	758.1	43.6
Above 45	860	1 515	2 375	2 250	857.0	789.8	42.7
	1 000	1 700	2 700	2 225	811.1	797 2	44.5
	850	1 650	2 500	2 262	819.7	769.1	43.2

is solely a function of the traction coefficient (μ), height of centre of gravity (H_{cg}), location of centre of gravity head to the rear axle centre line (L_{cg}) and drawbar height above the ground (H). By means of equation (5), the longitudinal stability performance of any tractor can be evaluated.

The equation (5) is represented graphically in **Fig. 4**. The line tan $\beta = \mu$ divides the graph in such a way that the area above the line represents conditions under which excessive wheel slip would prevent a tractor even under no load from climbing a gradient steep enough to become unstable. On the contrary, the area below the line represents conditions under which traction is sufficient to allow a tractor under load to ascend a slope steep enough to become unstable.

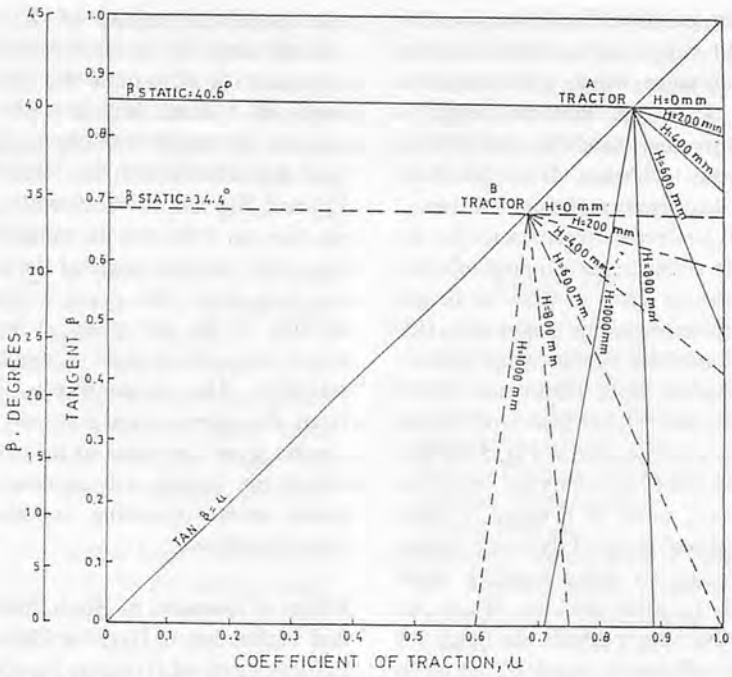

Fig. 4 Critical angle of dynamic stability and drawbar height.

Effect of Drawbar Height on Critical Angle of Dynamic Stability

To illustrate the effect of drawbar height, the test data of two tractors, namely; Hindustan G 453 tractor and Eicher Standard Chandi tractor, falling under 45 hp and 15 hp categories, respectively, have been plotted in **Fig. 4**. The relevant parameters are given in **Table 2**.

Several stability performance lines are drawn based on drawbar height varying from 0 to 1 000 mm at an increment of 200 mm. It can be seen that the critical angle of dynamic stability for any tractor varies linearly with the traction coefficient. Thus, a particular tractor will have many values of critical dynamic stability angle depending upon the surface on which the tractor is operated. A tractor having higher static stability angle will have better stability performance.

The drawbar height has a marked effect on critical angle of dy-

Table 2

Item	Hindustan G 453 tractor (A)	Eicher standard Chandi tractor (B)
Maximum pto power, (PS)	41.1	11.1
Distance of gravity ahead of rear axle centre line (L_{cg}), mm	710	599
Height of centre of gravity (H_{cg}) mm	829	875
Static stability angle, degrees	40.6	34.4

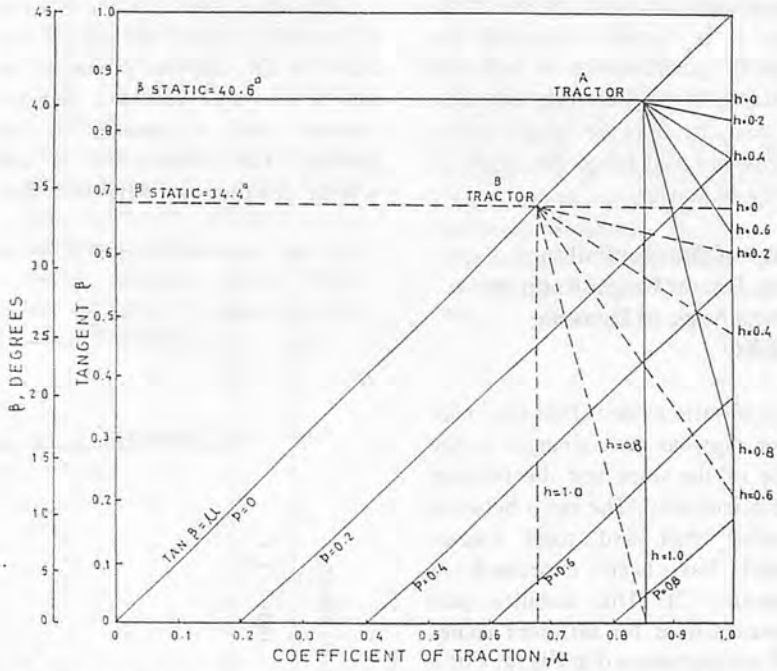

Fig. 5 Effect of drawbar pull to total tractor mass ratio (p) and drawbar height to height of gravity ratio (h) on angle of dynamic stability.

namic stability. The lower drawbar height will result in better stability performance which is illustrated in **Fig. 4**. If the drawbar height is known, the stability performance of a particular tractor can be evaluated on various surface conditions.

It is relevant to represent the dynamic stability performance characteristics in terms of drawbar height to centre of gravity height ratio (h). The stability performance characteristics of both Hindustan G 453 tractor and Eicher Standard Chandi tractors are shown in **Fig. 5** for different values of h varying from 0 to 1. For a value of h equal to zero, the critical angle of dynamic stability equals to static stability angle which is quite obvious. When the drawbar height equals the height of centre of gravity making h equal to 1, the stability performance line is represented by a vertical line. If the ratio h is further increased, the stability performance is seriously affected. It is, therefore, advisable to keep the drawbar height as low as possible well below the height of centre of gravity.

Effect of Drawbar Pull to Total Tractor Weight Ratio on Critical Angle of Dynamic Stability

It is quite evident that the maximum drawbar pull changes as the angle of the slope and the traction coefficient vary. The ratio between drawbar pull and total tractor weight has been expressed in equation (7). The stability performance lines for different values of β are represented in **Fig. 5**. For a value p = 0, tan β equals μ and is represented by the line tan $\beta = \mu$ in **Fig. 5**. Thus, the stability performance characteristics represented in **Fig. 5** are complete in themselves for different values of h and p and complete analysis of any tractor can be made similar to two tractors shown in **Fig. 5**. With the increased values of p for a particular tractor and particular values of h, the critical angle of dynamic stability decreases. To determine the critical angle of dynamic stability of any tractor, the static stability angle is first determined with the values of L_{cg} and H_{cg} and the intersection of the line tan $\beta = \mu$ and the tangent of the static stability angle of the tractor is marked. The point of intersection of the line p and h determines the critical angle of dynamic stability. The prependicular line from the intersection point on the abcissa gives the value of μ beyond which the tractor will become unstable under operating conditions specified above.

Effect of Location of Hitch Point and Inclination of Drawbar Pull on Critical Angle of Dynamic Stability

The hitch point on the tractors is normally located behind the rear axle. In the analysis presented so far, it has been assumed that the drawbar pull is parallel to the ground. This assumption is not ture in all situations. After introducing the two new terms, namely, ϕ angle between direction of drawbar pull and operating surface and L_1, distance of tractor hitch point behind the rear axle, an analysis is presented through equation (9). The effect of position of hitch point and inclination of line of pull on dynamic stability angle is shown in **Fig. 6**, in respect of two tractors, i.e., Hindustan G 453 and Eicher Standard Chandi. The related parameters chosen for graphical presentation are indicated in **Table 3**.

It is quite evident from **Fig. 6**, that with the increased inclination of drawbar pull, the critical angle of dynamic stability is considerably decreased. In fact, the drawbar pull with a downward vertical component has the same effect on the dynamic stability of the tractor as raising the drawbar when the drawbar pull is parallel to the ground, and it will decrease the dynamic stability angle considerably. This effect will be more pronounced if the hitch point is located further behind the rear axle.

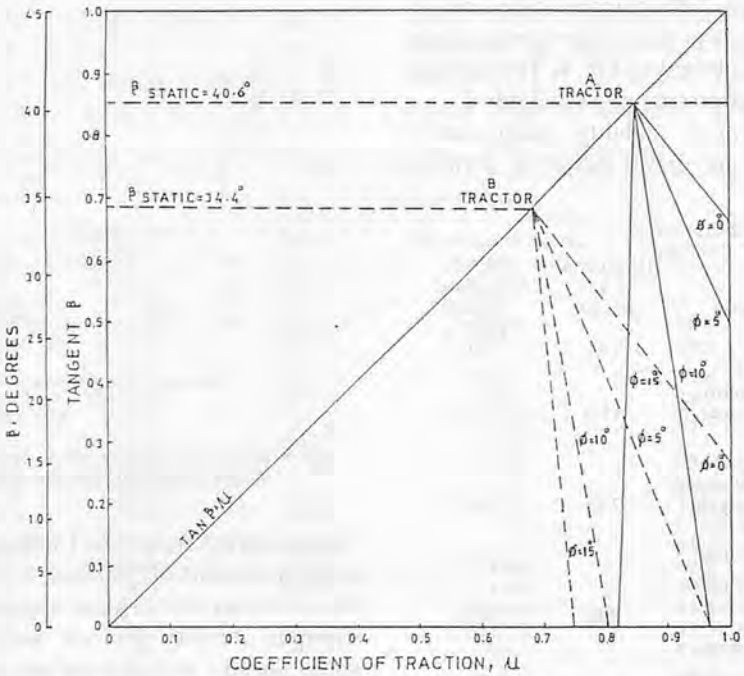

Fig. 6 Effect of position of hitch point and inclination of line of pull on dynamic stability angle.

Table 3

Item	Hindustan G 453 tractor (A)	Eicher standard Chandi tractor (B)
Maximum pto power, (PS)	41.1	11.1
Distance of gravity ahead of rear axle centre line (L_{cg}), mm	710	599
Height of centre of gravity (H_{cg}) mm	829	875
Static stability angle, degrees	40.7	34.4
Distance of tractor hitch point behind the rear axle (L_1), mm	800	800
Drawbar height (H), mm	500	500

Conclusions

i) The static stability angle is solely a function of location of gravity in horizontal and vertical planes and is fixed for a particular tractor with reference to its ballast condition.

ii) The critical angle of dynamic stability is a function only of the traction coefficient (μ), the distance of the centre of gravity ahead of the rear axle (L_{cg}), height of centre of gravity above ground level (H_{cg}), and drawbar height (H).

iii) With all other factors remaining constant, the critical angle of dynamic stability for a particular tractor varies linearly with the traction coefficient.

iv) A tractor having higher value of static stability angle will have better stability performance.

v) The drawbar height has a marked effect on the critical angle of dynamic stability. The lower drawbar height will result in better stability performance.

vi) With the increased values of ratio between drawbar pull to total tractor weight, the critical angle of dynamic stability decreases.

vii) The location of hitch point and inclination of line of pull with the operating surface have significant effect on the dynamic stability angle. With the increased values of angle between line of pull and the operating surface, the critical angle of dynamic stability decreases considerably. This effect will be more pronounced if the hitch point is located farther behind the rear axle.

REFERENCES

FAO, Rearing and Capsizing of Tractors, Informal Working Bulletin 25, Farm Power and Machinery, Agricultural Engineering Branch, Land and Water Develpment Division, Food and Agriculture Organization of the United Nations.

Gilfillan, G. Attitude of a Tractor on Sloping Land. Journal of Agricultural Engineering Research, 12 (4) 1967, pp 293-296.

Gilfillan, G. Tractor Stability and Control. Technical Report 1 of Scottish Institute of Agricultural Engineering, 1979.

Sack, H.W. Longitudinal Stability of Tractors. Agricultural Engineering, 37 (5), 1956.

Spencer, H.B., Owen, G.W. and Glasbey, C.A. Onsite Measurement of the Stability of Agricultural Machines. Journal of Agricultural Engineering Research, 31 (1) 1985. pp. 81-91.

Use of Seed-cum-fertilizer Drill in Wheat Crop Production

by
A.P. Sharma
Dept. of Agric. Engg.
Haryana Agric. Univ.
Hisar 125004, India

M.K. Garg
Dept. of Agric. Engg.
Haryana Agric. Univ.
Hisar 125004, India

R.S.R. Gupta
Dept. of Agric. Engg.
Haryana Agric. Univ.
Hisar 125004, India

Abstract

The present study was conducted to evaluate the effect of use of the mechanical sowing on wheat yield, energy input and cost of operation in comparison with the traditional method. The animal-drawn mechanical sowing has resulted in a 10.4% increase in yield; 49.1% savings in energy; and 49.0% savings in the cost of operation. The overall benefit was Rs.671.75 per ha.

Introduction

Agriculture is the most important sector of the Indian economy both in terms of gross national product and number of productive workers employed. The country is producing surplus food but still the potential of increasing the yield of food grain exists and the standard of living of rural peasantry can be raised as nearly 75% of the population lives in rural areas.

Medium, marginal and small farmers who account for 84.8% of agricultural land holding and 39.4% of the cultivated area depend mainly on human and animal power. The country has over 80 million draft animals consisting of mainly about 70 million bullocks. The animals are the largest contributor of farm power providing about 50% of the total power available in the country. With the introduction of high yielding varieties of wheat and chemical fertilizers, the yield has increased considerably. Further increase in the yield of this cereal crop is taking place with the introduction of mechanization. This study estimated the wheat yield, savings in energy, saving in cost of sowing and cost benefit of the use of bullock-drawn seed-cum-fertilizer drill over the traditional method.

Material and Methods

This study was conducted in three randomly-selected villages of Hisar district of Haryana State in India. The objective was to determine the effect of use of seed-cum-fertilizer drill on yield, energy and cost of operation in wheat crop. The experimental field was divided into two blocks of 0.5 ha size each. All inputs, except the method of sowing, were similar for both blocks. Six trials were conducted. A three-row bullock-drawn seed-cum-fertilizer drill was used for the study as an improved technology over the traditional method of sowing wheat. The traditional method in the study area is the country wooden plough which makes furrows in which wheat seeds are manually dropped by another man accompanying the plough man. The varieties of wheat used for the study were WH 283 and WH 147.

The machine has a provision of three lines. The depth is controlled by a lever attached to the shaft. The distance between lines may be adjusted by the bolts which are fixed with the shoes and shaft. The box is divided in two chambers. The front box for fertilizer has a capacity of 50 kg while the back side has 20 kg capacity for seeds. To avoid caking of the fertilizer there is an agitator attached to the shaft. There are three triangular holes below each roller for dropping of the fertilizer. The quantity of fertilizer is adjusted by a lever which controls the size of the opening holes. There is a provision of fluted rollers in the chamber of seeds for regulating the quantity or number of seed being dropped. The seed and fertilizer dropping is controlled by a lever attached with a V-belt pulley and wheel of the drill.

The specifications of the seed-cum-fertilizer drill are as follows:

M.S. frame:

90 x 44 cm rectangular,

Wooden seed box:

90 x 50 cm with two compart-

ments: one for seed and the other for fertilizer

Power transmission:

Speed ratio of ground wheel to seed metering shaft 1:2 with an idler pulley.

Seed metering mechanism:

Fluted roller type.

Fertilizer metering mechanism:

Gravity with agitator

Furrow openers:

30 x 10 mm attached to frame by nuts and belts.

The fertilizer is dropped first at a depth of 1 cm below and 1 cm, by the side of the seed. The machine was calibrated for 100 kg of wheat seed/ha and 120 kg/ha superphosphate fertilizer. Seed and fertilizer rates can be varied according to requirement. An area of 1 ha area of land at each place was selected. This was divided into two blocks of equal sizes.

Immediately after harvesting of pearl millet, the land was ploughed with the help of a bullock-drawn soil stirring plough. Two harrowings were done to break the clods and to pulverise the soil. Weeds were collected with the help of stubble-collector. One planking was done to level the experimental plot. Thus in both plots in all the three villages, these operations were similar in order to maintain uniformity of operations.

Sowing was done by the traditional method of using a country wooden plough as control in the first plot whereas seed-cum-fertilizer drill was used in the second plot. Both plots in all villages of study were given similar treatments like volume of irrigation water, number of irrigations, fertilizer, plant protection, weed control and harvesting and threshing. Thus, only the method of sowing was variable in the study. At every stage during the study, data in terms of time required, number of bullock pair hours and number of man-hours involved for the operation were recorded for use in analysing the energy requirement calculated by the following equation:

$$E = 640.1\ (0.067\ H + BPH)/A$$

Where;

E is the energy requirement (kcal/ha),

BPH is the total bullock pair hours for the operation,

H is the total man-hours for the operation, and

A is the area on which the operation has been performed (ha).

Yield data was also recorded.

The prevalent wage rates in the region were taken for the analysis of data which were as follow:

Human labour rate = Rs.18/per/day (8 h a day)

Pair of bullock with a ploughmen = Rs.6.25/h

Detailed observations of effect of yield, saving in energy, saving in cost of operations of sowing and overall cost benefit of using seed-cum-fertilizer drill over traditional method of sowing were recorded in **Tables 1, 2, 3 and 4.**

Table 1 Effect of Sowing Methods on Yield

Trial	Variety	Yield in g/ha		Increase percent
		By using seed-cum-fertilizer drill	By using traditional method	
1	WH-283	34.0	32.5	4.6
2	do.	33.5	30.5	9.8
3	WH-147	30.25	28.5	6.1
4	do.	31.0	26.0	19.2
5	WH-283	29.5	28.5	3.5
6	do.	35.5	29.5	20.3
Average		32.29	29.25	10.4

Table 2 Effect of Sowing Methods on Energy Saving

Trial	Energy utilization per ha (kcal)		Savings percent
	By using seed-cum-fertilizer drill	By traditional method	
1	7 360	14 785	50.2
2	7 070	13 375	47.1
3	6 815	13 920	51.0
4	6 815	14 495	53.0
5	7 680	14 495	47.0
6	7 360	13 630	46.0
Average	7 183	14 116	49.1

Table 3 Effect of Sowing Methods in Operational Cost Saving

Trial	Cost of operation (Rs./ha)		Savings percent
	By using seed-cum-fertilizer drill	By traditional method	
1	67.50	135.40	50.1
2	65.00	122.50	46.9
3	62.50	127.50	51.0
4	62.50	132.75	52.9
5	70.40	132.75	47.0
6	67.50	125.00	46.0
Average	65.90	129.30	49.0

Table 4 Cost Benefit of the Use of Seed-cum-fertilizer Drill

Trial	Saving in cost of operation (Rs/ha)	Extra income in terms of increase in yield (Rs/ha)	Net profit (Rs/ha)
1	67.90	300.00	357.90
2	57.50	600.00	657.50
3	65.00	350.00	415.00
4	70.25	1 000.00	1 070.25
5	62.35	200.00	262.35
6	57.50	1 200.00	1 275.50
Average	63.40	608.35	671.75

Note: The prevailing market rate of wheat was taken as Rs.200 per quintal (100 kg) at the time of this study.

Results and Discussion

Table 1 shows that yield level has increased from 3.5 to 20.3% by using mechanical method of sowing in comparison to the conventional method. The average increase in yield was 10.4%. The reason for the increase in yield was proper placement of seed and fertilizer and adequate plant population.

Observations in **Table 2** reveal that substantial amount of energy was saved by using the mechanical method of sowing. Saving in energy in sowing wheat crop varied from 46.0 to 53.0% by using mechanical method. The average saving in energy was 49.1%.

Table 3 represents the cost of operation using both methods of sowing. The average cost of operation by using seed-cum-fertilizer drill was Rs.65.90/ha while it was Rs.129.30/ha in the case of the traditional method. Thus, on average, there was a saving of 49.0% in the cost of operation.

The net benefit in the use of seed-cum-fertilizer drill was calculated and presented in **Table 4**. The saving in the cost of operation and additional income from the increase in yield resulted in an average benefit of Rs.671.75/ha. Hence, a farmer can recover the total cost of the machine in the first year.

It is thus evident that mechanical sowing reduced the labour cost required in the sowing operation to nearly half. Therefore, mechanical sowing is much more efficient than the common method of sowing. The percentage garmination of the seeds is high because enough moisture becomes available to the seeds at early stages as the soil is well packed around the seed by the covering device. Sowing is quick, in straight lines and at uniform spacing. These facilitated inter-row cultivation at the early stages of the crop for the control of weeds and application of fertilizers and chemical.

While conducting the evaluation of the machine in the field it has been observed that the following factors may affect the efficiency of the machine: preparation of the field before sowing; moisture content in the soil; physical properties of soil; speed of bullock; depth of sowing, topography of land; and experience of operator.

REFERENCES

Dhiman, S.D., Sharma, A.P. and Sachen, P.L., 1985. Seed-cum-fertilizer drill for higher yields. Indian Farming, August, 1985.

Grewal, M.S. and Aharma, A.P., 1982. Increasing phosphorous efficiency pays. Seed and Farms. Vol. VIII, No.7-8 July-August, 1982.

Maurya, N.L. 1985. Status of animal energy research in India. Proc. Ind Soc. Agric, Engrs, Silver Jubilee Convention, 1955, Vol. 1, pI-1 to I-6.

Singh, C.P. et al, 1980. Energy requirements for paddy-wheat rotation for Punjab State. Presented at XVII Annual Convention of Ind. Soc. Agric., Engrs. held at IARI, New Delhi.

Sharma, D.N. et al, 1984. Design, development and performance evaluation of a multicrop bullock-drawn seed-cum-fertilizer drill. Haryana Agric. Univ. J.Res., XIX (3): 350-360.

Sharma, A.P. and Garg, M.K. Energy Utilization Pattern of Major Crops Grown in Haryana State of India. Paper accepted for publication in Agric. Mech. Asia Afr. Latin Am. (AMA).

Sharms, A.P., 1977. Animal drawn quirements for paddy-wheat 55-56.

Sharma, A.P., 1980. Design, Development and Evaluation of Tractor-drawn 'DALC' planter in Fiji, Agric. Mech. Asia. Afr. Latin Am. (AMA).

Design Development and Testing of Hand Rotary Broadcasting Device for Seeds, Fertilizers and Granular Insecticides

by
A. Tajuddin
Asst. Prof.
Dept. of Farm Machinery
College of Agric. Engg.
Tamil Nadu Agric. Univ.
Coimatore 641003, India

Abstract

The hand rotary broadcasting device was designed, developed and tested for broadcasting seeds, fertilizers and granular insecticides in laboratory and in field. Uniformity coefficient of distribution was determined for spreading urea using the broadcasting device and compared with that of the hand broadcasting process. The device could spread urea at a field coverage of 1.26 ha/h in paddy. The unit weighs 3.6 kg and costs US$55.00 equivalent.

Introduction

Hand broadcasting of fertilizers is still the common practice followed by majority of the farmers in developing countries. The principal disadvantage of hand broadcasting is the non-uniformity of distribution causing uneven growth of crop which ultimately results in poor yield. Hence, a hand-operated mechanical device which can broadcast fertilizer accurately and uniformly in a single run has been developed.

Methodology

The first prototype broadcasting device was fabricated with a 450x 230x230 mm size hopper made of 16 gauge aluminium sheet (**Fig. 1**). Two rectangular openings with shutter arrangements were made in the 400x150 mm size hopper bottom. Below the hopper an aluminium rotor plate was fitted so as to be rotated by a handle through suitable cast iron gear wheels. An agitating mechanism was provided in the hopper to avoid clogging of materials during operation.

Three levels of rotor diameter, viz., 250, 300 and 330 mm, 3 levels of curved projections or fins on the rotor plate, viz., 4, 6 and 8 (**Fig. 2**) and 3 levels of speed ratio between handle and rotor, viz., 1:7, 1:9 and 1:11 were taken. In total 27 (3x3x3) laboratory tests were conducted in order to optimize the above parameters. Two kg urea was used for each test. Thick paper/aluminium boxes of 100x 100x30 mm size were placed at 1m x 1m spacing on the ground. The weight of urea spread in each box was found in each test. By plotting the graphs using these observations, the area of spread with an application intensity of 0.1 g/100 cm^2 (100 kg/ha) was

Fig. 1 First prototype broadcasting device.

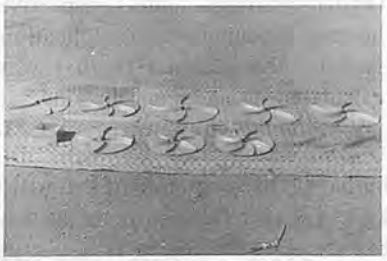

Fig. 2 Different rotors under test with a collection box.

Acknowledgements: The author acknowledges his gratitude to Er. R. Manian, Senior Research Engineer, Zonal Research Centre, Tamil Nadu Agricultural University, Coimbatore for his help in formulating the research project and to Er. R. Karunanithi, Professor and Head, Department of Farm Machinery, College of Agricultural Engineering, Tamil Nadu Agricultural University, Coimbatore for his encouragement during the implementation of the project.

determined in each test. Uniformity coefficient of distribution (UCD) was determined for the respective test using the formula,

$$UCD = \frac{1 - \sum_{n=1}^{n} (\bar{x} - x_1)}{n\bar{x}}$$

where,

$\bar{x}$ is the average weight of urea of all the boxes,

x_1 is the weight of urea in each box; and

n is the number of boxes kept for the test.

The second prototype device was made with the optimized 300 mm rotor plate having 6 curved projections and 1:11 speed ratio. An aluminium hopper was replaced by a plastic hopper fitted in mild steel frame. The device was tested with urea, NPK mixture, sorghum, paddy and furadan-sand mixture (1:3 w/w).

The third prototype was made with increased hopper bottom opening area. The cast iron gear wheels were replaced by aluminium gear wheels which are fitted in aluminium frame work in order to reduce the gross operating weight of the unit (**Figs. 3** and **4**). This device was tested for broadcasting sorghum, paddy, pearl millet, urea and furadan-sand mixture (**Fig. 5**). The time taken for spreading 1 kg material and width of spread were measured for each material at various hopper openings. The average walking speed of the operator was 2.5 km/h. From the discharge rate of material (kg/h) through the respective hopper opening, the application rate of the material (kg/ha) was calculated using the following relationship, viz.,

Application rate of materials, kg/ha = (Discharge rate of material, kg/h)/(Actual field coverage of the braodcasting device, ha/h)

where, actual field coverage of broadcasting device, ha/h = Theoretical field coverage, ha/h x field efficiency (90%)

in which the theoretical field coverage, ha/h = (Average walking speed of the operator, km/h x width of spread, m)/10

Fig. 3 Third prototype broadcasting device, outside view.

Fig. 4 Third prototype broadcasting device, inside view.

Fig. 5 Broadcasting device in operation.

Results and Discussion

The results of the laboratory tests conducted with the first prototype broadcasting device are shown in **Table 1**. The rotor of 350 mm diameter with 6 fins gave maximum area of spread of 36.03 m^2 at 1:9 speed ratio. But the uniformity coefficient of distri-

Table 1 Laboratory Testing of First Prototype Broadcasting Device

Speed ratio between handle and rotor	Rotor dameter (mm)	Number of curved fins on the rotor	Area of spread (m^2)	Uniformity coefficient (%)
1:7	350	8	25.71	27.13
		6	31.55	40.79
		4	20.18	18.50
	300	8	19.37	50.29
		6	14.27	30.36
		4	18.16	35.21
	250	8	13.78	29.00
		6	15.91	36.00
		4	9.97	25.00
1:9	350	8	32.30	38.00
		6	36.03	42.00
		4	23.28	37.00
	300	8	22.77	42.00
		6	24.23	38.97
		4	23.96	36.00
	250	8	30.62	60.00
		6	30.52	59.00
		4	25.50	46.00
1:11	350	8	30.94	41.00
		6	31.05	30.00
		4	34.57	44.00
	300	8	28.02	54.00
		6	31.21	55.00
		4	29.84	53.00
	250	8	32.48	46.00
		6	24.16	36.00
		4	32.63	42.00

bution achieved by the rotor was only 42%. The maximum uniformity coefficient of 60% was obtained with the 250-mm diameter rotor with 8 fins at 1:9 speed ratio. In this case the area of spread was only 30.62 m^2. However, the 300-mm diameter rotor with 6 fins at 1:11 speed ratio could give 31:21 m^2 area of spread and 55% uniformity coefficient. Hence, this rotor and speed ratio were selected for the second prototype device.

The laboratory test results of the second prototype device are summarized in **Table 2**. The results show that the maximum hopper bottom opening area provided in the device was insufficient to give the recommended application rate of 375 kg/ha for NPK mixture in paddy. Therefore, the third prototype device was made with an increased hopper bottom opening area.

The results of the laboratory tests carried out with the third prototype device are summarized in **Table 3**. Using these observations the hopper opening (mm) vs. application rate (kg/ha) curves were plotted **(Fig. 6)** for the different materials tested. If the recommended application rate of material is known, required hopper opening

Table 2 Laboratory Testing of Second Prototype Device

Sl. No.	Hopper bottom opening area, mm^2	Application rate, kg/ha			
		Urea	Sorghum	Furadan-sand mixture	NPK mixture
1.	288	21	–	51	15
2.	546	90	60	150	84
3.	703	150	129	210	111
4.	780	180	150	–	150

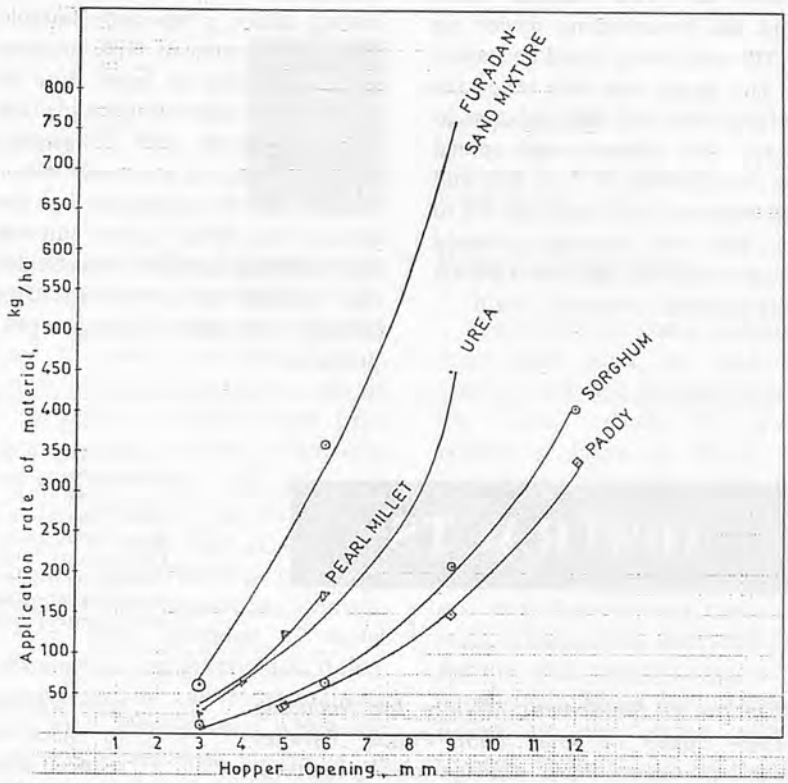

Fig. 6 Calibration curves for different materials.

Table 3 Laboratory Testing of Third Prototype Device

Sl. No.	Material	Hopper opening (mm)	Time taken to spread 1 kg material (s)	Width of spread (m)	Theoretical field coverage (ha/h)	Actual field coverage (ha/h)	Discharge rate of material (kg/h)	Application rate of material (kg/ha)
1.	Sorghum	3	170	10.0	2.50	2.25	21.18	9.41
		6	30	8.5	2.13	1.91	120.00	62.73
		9	13	6.0	1.50	1.35	276.92	205.13
		12	10	4.0	1.00	0.90	360.00	400.00
2.	Paddy	5	75	6.0	1.50	1.35	48.00	35.56
		6	45	5.5	1.38	1.24	80.00	64.62
		9	22	5.0	1.25	1.13	163.64	144.81
		12	12	4.0	1.00	0.90	300.00	333.33
3.	Pearl millet	3	100	6.5	1.63	1.46	36.00	24.66
		4	40	6.5	1.63	1.46	90.00	61.64
		5	22	6.0	1.50	1.35	163.64	121.21
		6	17	5.5	1.38	1.24	211.76	170.77
4.	Urea	3	75	6.5	1.63	1.46	48.00	32.88
		6	20	5.5	1.38	1.24	180.00	145.16
		9	9	4.0	1.00	0.90	500.00	444.44
5.	Furadan-sand mixture	3	45	6.0	1.50	1.35	80.00	59.26
		6	10	4.5	1.13	1.01	360.00	355.38
		9	7	3.0	0.75	0.68	514.29	756.31

can be directly set using the above calibrated curves by interpolation or extrapolation. A dial arrangement was provided in the device so as to easily read the hopper opening from outside.

When urea was spread by hand the uniformity coefficient of distribution was 43% whereas while using the broadcasting device up to 70% uniformity could be achieved. The device was then tested for applying urea and NPK mixture in paddy. The device could spread urea for a width of 7 to 9 m and NPK mixture for a width of 3.5 to 4 m. The field coverage obtained by the device for urea was 1.26 ha/h and for NPK mixture 0.7 ha/h.

Conclusions

The hand rotary broadcasting device is capable of spreading the materials over 3 to 4 times the area that can be covered by the hand braodcasting process. At the same time the material is spread with 50% more uniformity. The broadcasting device is especially suitable for applying urea of NPK mixture as top dressing or basal dose in paddy either planted or not planted in rows. Seeds such as paddy, gingelly, sorghum and other minor millets can be broadcast by the device. The device is also suitable for applying granular insecticides like furadan or carbofuran after mixing with sand in suitable proportions.

REFERENCES

1. Anual Report, 1980. Co-ordinated Scheme for Research and Development of Farm Implements Machinery and Production under Different Agro-Climatic Conditions (ICAR). Department of Farm Power and Machinery, College of Agricultural Engineering, Punjab Agricultural University, Ludhiana, India.
2. Lal, R. and Datta, A.C. 1971. Agricultural Engineering Through Worked Examples. Saroj Prakashan, 646 Katra, Allahabad, India.
3. Sahay, J. 1977. Elements of Agricultural Engineering-Volume I, Agro Book Agency, New Area, Jakkanpudur, Patna, India. ■■

ABSTRACTS

The ABSTRACT pages is to introduce the abstracts of the article which cannot be published in whole contents owing to the limited publication space and so many contributions to AMA. The readers who wish to know the contents of the article more in detail are kindly requested to contact the authors. The requests from the readers for publishing the whole contents among the articles introduced here may also be sent to editorial staff. Regarding the article of many requests, the publication of whole contents will be reconsidered.

Utilization of Soil-cement Mixture for Reducing Seepage Losses in Small Farm Ponds: Feridun Hakgören, Assoc. Prof., College of Agriculture, Mediterranean University, Antalya, Turkey.

Small water-containing structures are now important sources of irrigation water in arid and semi-arid climate condition. But excess seepage losses are very important in the kind of structures that are built in loose silts, sands and gravel foundations. Soil-cement has been used successfully to reduce seepage losses as a low cost lining material for both small and large water storage reservoirs. This study was conducted to determine an economical lining material in order to prevent seepage losses in small farm ponds. For this purpose three soils were selected having different texture and Atterberg limits as a base material among ten soil samples. Portland cement is used as a soil additive to stabilize the soils.

The mixture prepared with the soil No. 1 (containing 19.7% silt, 10.4% clay and with 13% cement) displayed a good durability against freezing-thawing and wetting-drying in the laboratory. This mixture selected as a lining material after laboratory tests was used to line the model pond in the field to check the seepage losses. Above mixture has reduced seepage losses for about 94%.

Elastoplastic Constitutive Parameters for Rice en masse: Gumbe, L.O. and Maina, B.M., Lecturer and Student, respectively, Dept. of Agric. Engineering, University of Nairobi, Nairobi, Kenya.

Lade's constitutive stress-strain theory was used to model the behaviour of rice en masse. Triaxial tests were conducted at a moisture content of 14.8% (d.b.) and an initial bulk density of 812 kg/m^3 to evaluate the material properties as per the theory. The estimated fourteen parameters were used in the constitutive equation to calculate stress-strain relationship for rice en masse in triaxial compression test conditions. Results showed that Lade's theory can adequately describe the stress-strain behaviour for rice en masse.

(Continued on page 48)

Selection of Appropriate Solar Pump for Agricultural Applications

by
Kulbir Singh Malhotra
Escorts Limited Research Centre
Faridabad, India

Ms Manjeet Kaur
Demonstration School
Regional College of Education
Ajmer 305001, India

Abstract

A procedure has been evolved in determining the appropriateness and suitability of solar photovoltaic pumps for irrigation and related purposes if the soil strata, crops to be grown, land area to be irrigated and depth of water table are known.

Introduction

There are two types of solar pumping systems: i) based on solar thermal technology involving concentrating and flat plate solar collectors, and ii) based on solar cells. Only a few models of solar thermal pumps are available in the market as they are yet in the development stage. Moreover, their design involves sophisticated technology and their maintenance is costly and demands technical expertise. Most of the water pumping sets are meant for agricultural applications in rural areas, therefore, a farmer or rural technician cannot easily maintain them. The initial cost of installing these pumps is very high in comparison with that of diesel and electric pump sets. On the other hand, several popular designs of pumping sets based on solar cells are available in the market. The cost of solar cells has decreased considerably during the last 20 years, and research progress is continuing to improve their efficiency and reliability and to lower their price. Today, most of the commercially available solar cells are manufactured from silicon with module efficiencies ranging from 10 to 12%.

The design of the photovoltaic pump is such that it does not involve many moving parts and thus its maintenance is comparatively easy. Although its initial installation cost is very high, it may prove to be more appropriate for rural remote areas which are not connected with electricity or unlikely to be connected with the grid in the near future. A cost analysis of different pumps has shown that, in the long run, photovoltaic pumps are more economical than diesel or electric pumps[1].

Pump Configurations

A photovoltaic pump consists of three main parts, viz, solar cell arrays, pump and storage batteries. The block diagram of a pump system is shown in **Fig. 1**. Two main groups of systems exist: those with storage batteries and those without storage batteries. For exclusive use of water pumping, the system without storage batteries is more efficient and less costly than the one with energy storage as the latter is only about 80% to 85% efficient. In the system without storage batteries, a water tank replaces the batteries. The pump attached to the water tank, apparently operates when solar radiation is available.

The solar pump is basically a self-power generating system that

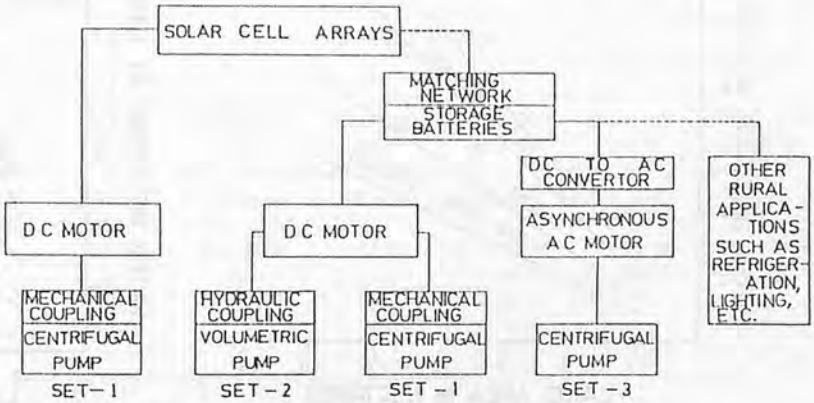

Fig. 1 Diagram of different types of photovoltaic water pumping sets.

runs an electric motor which, in turn, drives the pump. There are different pump-motor combinations, and three of them are shown in **Fig. 1**. In set 1, the solar cells run a DC motor which is coupled to a centrifugal pump through mechanical transmission. In set 2, a volumetric pump is coupled to a DC motor through a hydraulic transmission. In set 3, there is a DC/AC converter, an asynchronous AC motor and a centrifugal pump. For large power requirements, set 3 is most appropriate. For submersible pumps, an AC motor is used, while DC motors are more suitable for ground level pumps. An AC motor requires no maintenance but needs a DC/AC converter, whereas DC motors can be directly coupled to the solar cells.

Brushless DC motors are more efficient and require less maintenance as compared to convertional DC motors with brushes, but their commercial availability is generally limited to capacities of up to a few hundred W. It has also been observed that permanent magnet field motors are more efficient than those with a shunt or series fields.

Suitability of Pump

The power required to pump water for irrigation depends on two main factors: i) depth of water table; and ii) amount of water flow (say, in *l*/sec).

Although the depth of the water table varies from place to place and depends on natural conditions beyond human control, the water discharge required for irrigating a farm depends on: i) soil strata, ii) crops to be grown, and iii) land area to be irrigated.

Figs. 2 and **3** show the relationship between land area and water discharge for growing different crops under Indian conditions in the case of small land holdings (up to about 3 ha) in a hard rocky area and an alluvial area, respectively. **Figs. 4** and **5** show the same relationship for larger farms. These relationships have been calculated in accordance with the Indian Standards[2] while taking into consideration several factors, such as: i) the type of soil; ii) conveyance losses of water, iii) local climatic conditions and iv) the type of crop. These figures were derived from the data collected between 8:30 am to 4:30 pm at Faridabad, India, from 15th July, 1984 to 15th February, 1985.

With the help of **Figs. 2** to **5**, we know the water discharge, i.e., rate of water output required for irrigating a given field for a specific crop.

Fig. 6 shows the relationship between pump power and water discharge for different depths of the water table. This has been calculated by using the equation[3].

$$E = Q \frac{dgH}{3600\,\eta}$$

where

- E = Electric energy in Wh
- Q = Quantity of water in m^3
- d = density of water (1000 kg/m^3)
- g = gravity constant (9.8 m/s^2)
- H = total head in meters (that is, the distance between the water level in the well and the highest level pumped; it includes frictional losses in the pipes as well)
- η = total efficiency of the system including motor, pump, batteries, converter, etc.

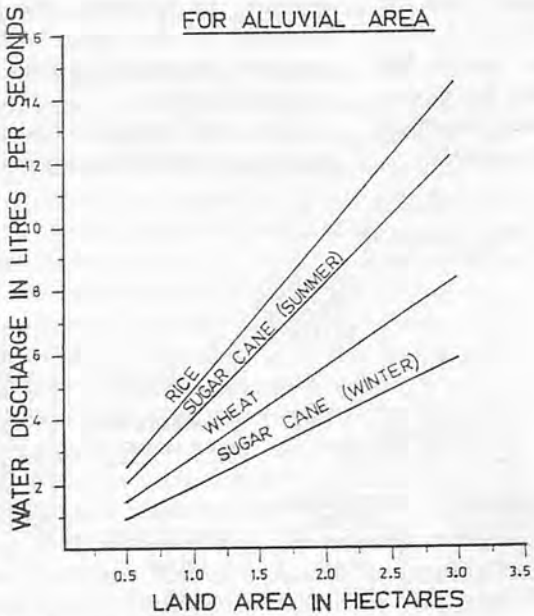

Fig. 2 Land area and irrigation water discharge.

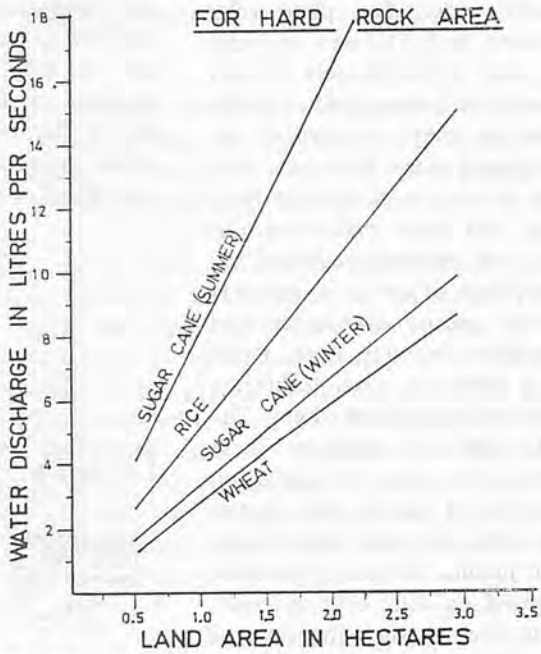

Fig. 3 Land area and irrigation water discharge.

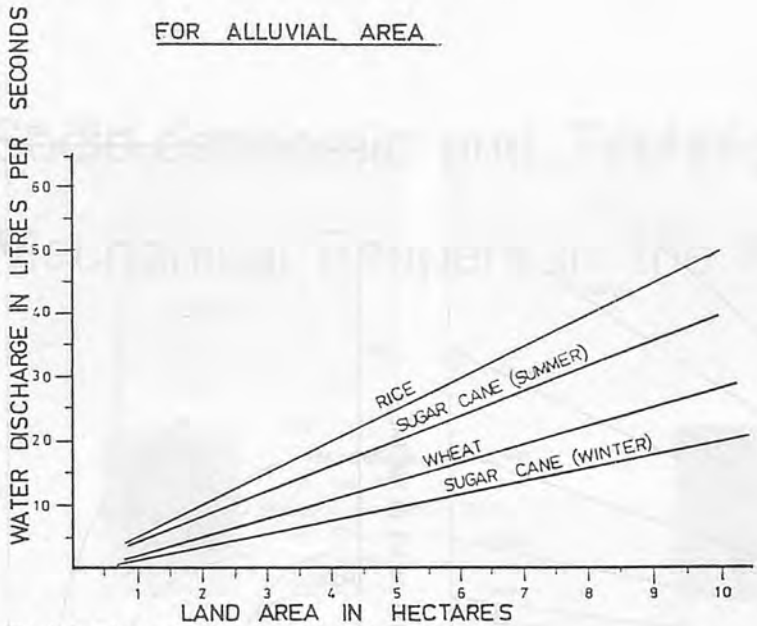

Fig. 4 Land area and irrigation water discharge.

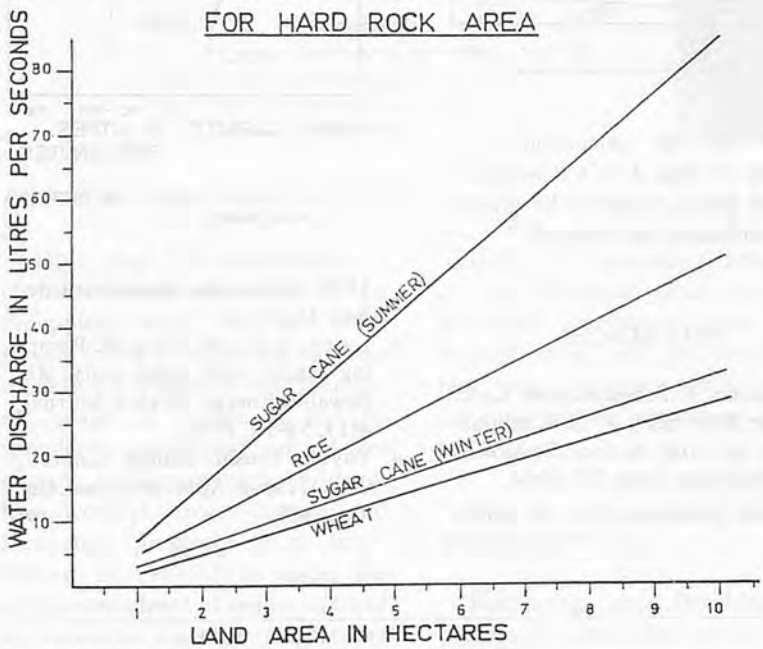

Fig. 5 Land area and irrigation water discharge.

From **Fig. 6**, we can calculate the power of the pump required to lift water from a particular depth.

The performance curves of various solar pumps are given by the manufacturer in its specification chart. **Fig. 7** depicts the performance curves of six models of solar pumps manufactured by a Japanese firm[4]. The characteristics of the six models of solar pumps are given in **Table 1**.

Models 1 and 3 operate in almost the same range of total head, i.e., between 1m and 8m for model 1, and 1m and 10m for model 3, but the pumping capacity of model 3 is far greater (up to 160 *l*/min) than that of model 1 (up to 25 *l*/min) (see **Fig. 7**). With models 2 and 4, we can get higher total heads in comparison to models 1 and 3, but the water pumping capacity falls down considerably. Model 5 is more suitable for areas with total head requirements of 6m to 15m and a corresponding pumping capacity which varies from 350 *l*/min to 80 *l*/min. This model is ideally suited to a 10m total head requirement and a pumping capacity of over 200 *l*/min. Although model 6 operates in total head range of 15m to 30m, its pumping capacity is slightly lower than that of model 5. Model 6 is ideally suited for semi-arid and arid areas where the water table is very deep. Models 3 and 5 are more suitable for large farms with high water

Table 1 Characteristics of Six Models of Solar Pumps

Characteristics		Model serial no.					
		1	2	3	4	5	6
Pump and motor	Model No.	SMB-50	SMB2-50	SMB-200	SMB2-200	SMD-750	SMD2-750
	Rated output of motor	50 W	100 W	200 W	400 W	750 W	1 500 W
	Type	DC motor without brushes				DC motor with brush	
	Bore size	19 mm	19 mm	40 mm	40 mm	50 mm	40 mm
Solar array	Output power	88 W	2 x 88 W	352 W	2 x 352 W	1 232 W	2 x 1 232 W
	Voltage	33 V	33 V	2 x 33 V	2 x 33 V	3.5 x 33 V	3.5 x 33 V
	No. of modules	2	4	8	16	28	56
	No. of modules in series connection	2	2	4	4	7	7
	Parallel rows	1	2	2	4	4	8

Source: Toyida Tsusho Kaisha Ltd., Japan, Specifications catalog.

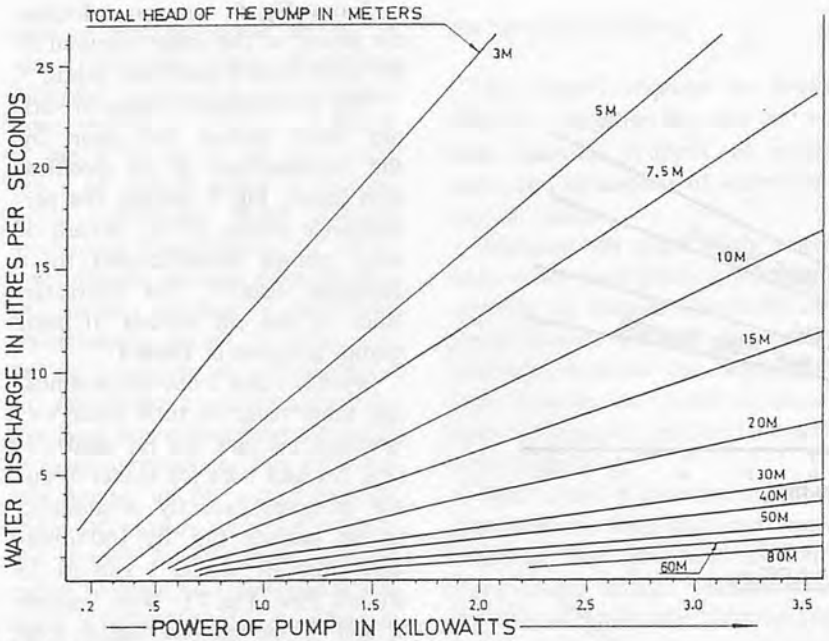

Fig. 6 Power and irrigation water discharge.

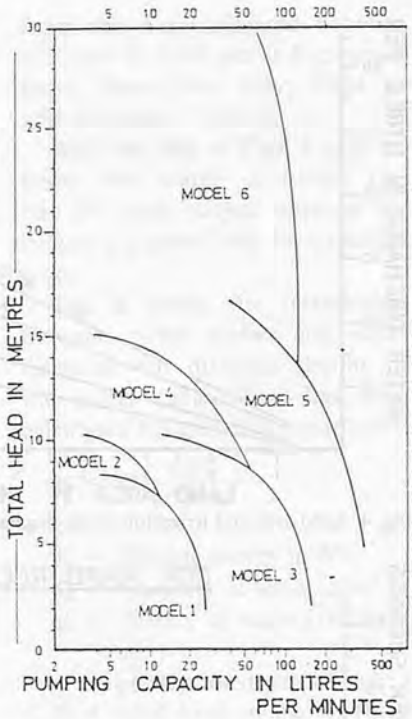

Fig. 7 Characteristic curve of six models of solar pump.

tables. Models 1, 2 and 4 are suitable for small land holdings where the water discharge requirements are low.

Conclusion

We see from **Fig. 7** that the data provided by the manufacturer can help in selecting a particular pump if we know the water discharge and depth of the water table which can be calculated with the help of **Figs. 2** to **6** if we know the soil strata, crops to be grown, and land area to be irrigated.

REFERENCES

1. Malhotra, K.S. and Manjeet Kaur. Solar Electricity – II: Examination of cost factor, Economic Times Daily, June 27, 1984.
2. Indian Standards No. 15: 9694-1980; Indian Standards Institute, New Delhi.
3. Lysen, E.H. and Hulle, F. Pumping water with solar cells, Renewable Energy Review Journal, 4(1), 54-59, 1982.
4. Toyida Tsusho Kaisha Limited, Osaka, Japan. Specifications catalog, 1985.

(Continued from page 44)

Correlation of Exhaust Smoke to Significant Operation Variables in a Direct Injection Diesel Engine:
Kamal N. Abdalla, Agric. Engineering Dept., King Faisal University, P.O. Box 420, Al-Hasa 31982, Saudi Arabia.

In this study a simple quantitative correlation for predicting exhaust smoke level from a direct injection diesel engine has been developed. The effects of different engine operating parameters on exhaust smoke level have been investigated experimentally. The experimental results showed that exhaust smoke is significantly affected by changes in the diffusion burning fraction, engine speed and overall equivalence ratio. As a result a simple quantitative formula which relates exhaust smoke to these variables is presented. Limited application of this correlation to results from another diesel engine showed favourable agreement.

Socio-economic and Technical Performance of Mechanical Reapers in the Philippines

by
Fleurdeliz S. Juarez
Sr. Res. Asst.
Agric. Economics Dept.
Int. Rice Res. Inst.
Los Banos, Laguna
Philippines

Bart Duff
Agric. Economist
Agric. Economics Dept.
I.R.R.I.
Los Banos, Laguna
Philippines

Amanda Te
Commonwealth Foods, Inc.
Osmena St.,
Cagayan de Oro City
Philippines

Robert E. Stickney
H.N.G.R. Program
Wheaton College
Illinois 60187
U.S.A.

Abstract

More than 500 two-wheel mechanical reapers were sold in the Philippines from 1982 to 1984. About 25% were imported Japanese models; the remainder were fabricated locally. A sample of 163 respondents consisting of reaper owners, users, non-users, and landless workers from Bataan and Pampanga provinces were interviewed in 1984-85 to assess the pattern and level of reaper use and to evaluate machine impact on timeliness, harvest costs, output, income, and employment. The results indicate that reapers ensure rapid harvesting and, although they have no direct yield effect, reduce harvesting costs and raise incomes of owners through custom hiring. The machine displaces labor and reduces incomes of harvest laborers. The reaper cannot be used in fields having lodged crops, excessive water or deep mud. The reaper's utility was further reduced by mechanical problems. Imported reapers were profitable investments in late 1982 and early 1983 at 30% interest rates and an initial investment cost ranging from US$1,091 to US$1,774. However, devaluation of the Philippine peso in 1985 increased investment costs and interest rates, and decreased the real cost of labor, which discouraged further investment in the machine.

Introduction

Harvesting and threshing represent the final field operations in rice production. It is the point when farmers and laborers receive the payoff from care and rearing of the crop. In many Asian countries, harvesting is done with sickles or small finger knives (**Fig. 1**). Cutting the stalk and panicle with traditional tools requires from 8-16 labor days per hectare, depending on the condition and yield of the crop. Because of high labor requirements and the concurrent maturity of many rice fields, there are often difficulties in mobilizing sufficient harvest labor to ensure timely harvest and optimal yields. Harvest delays can reduce both the quality and quantity of rice (Toquero, et al, 1977; Duff, 1979).

Historical evidence indicates that changes from manual to mechanical reaping occur when rural wage rates rise sufficiently to make machines viable options (Asian Productivity Organization, 1983). In the United States, development of world food grain markets during the mid-1800s coupled with an unbounded land frontier made expanded grain production highly profitable. The availability of the McCormick reaper facilitated rapid growth in grain output (David 1968). In this instance, the reaper greatly increased the productivity of labor permitting an expansion in the area under

Fig. 1 Manual harvesting.

production.

In contrast, rice growing countries of Asia have little or no additional land available for expansion and must rely on an increase in land productivity to achieve and sustain higher levels of output. Under these circumstances, innovations that reduce costs by substituting machines for labor but with little or no direct impact on output can seldom be justified unless rural wage rates are rising rapidly.

The experience of Japan, Taiwan, and Korea indicates reaping is one of the last operations to be mechanized (Asian Productivity Organization 1983). Reapers were not used until these countries were well advanced in their structural transformation from rural to urban-based economies. The People's Republic of China has also been able to introduce and successfully use labor-saving devices (including reapers) largely as a result of tight control in the redeployment of labor to other jobs (Bai Ling 1986). Region-specific examples of highly mechanized harvesting technologies also exist in the Muda River basin in Malaysia and in the Pakistan and Indian Punjab (Ayob, 1979; Rahman and Butt, 1986).

In 1978, the International Rice Research Institute (IRRI) entered an agreement with the Chinese Academy for Agricultural Mechanization Sciences (CAAMS) to transfer, redesign, and promote a small, low-cost Chinese reaper. Two models, a 1.0- and a 1.6-meter version, emerged from this joint effort (Manalili, et al 1981) **(Figs. 2a, 2b, and 2c)**. The reaper design was introduced to Philippine manufacturers in 1982. Local support for extension of the design was provided through a joint Ministry of Agriculture (MAF)-IRRI Industrial Extension program (Stickney, et al 1986). The reaper generated strong interest among local manufacturers and farmers who observed it in operation. From 1982 to 1984,

Fig. 2a A model of the 1.0 m IRRI-designed reaper.

Fig. 2b A model of the 1.6 m IRRI-designed reaper.

MAF-IRRI cooperating manufacturers produced an estimated 470 units at prices ranging from $1,383 per unit in 1982 to $1,239 in 1984. In late 1985 the price was $1,114 to $1,671 per unit*.

Paralleling the design and development of the CAAMS-IRRI machines, Japan produced a design (the AR120 Kubota reaper) embodying many of the same features. This machine was imported into the Philippines in 1982 and found rapid acceptance in the local market in Bataan Province. The two major distributors of the imported model sold about 185 reapers during 1982-84 at $1,091 to $1,497 per unit. The 1985 price was about $1,950 to $2,228 per unit.

Initial sales were very brisk for both the imported and local versions of the reaper with overall sales reaching a peak in 1983. Sales dropped significantly in 1984 and were near zero in 1985 as a direct result of the devaluation of the Philippine peso, a rapid rise in in-

*Based on the following exchange rates (P/US$): 1982=10.12, 1983=14.66 1984=19.37, and 1985=17.95.

Fig. 2c The 1.0 m IRRI-designed reaper in operation.

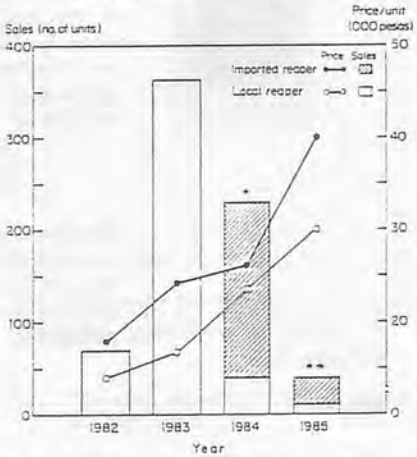

Fig. 3 Sales and price of imported and local reaper, Bataan and Pampanga, 1982-85. *Sales of imported reaper cumulative for 1982-84. **Approx. sales for imported and local reapers as of April 1985.

flaction and interest rates, a decline in the real rural wage, and generally depressed prices for rice and other agricultural commodities.

Objectives, Scope, and Study Design

The objectives of the study were to assess the patterns and levels of reaper use, and to determine its impact on harvest timeliness and cost, output, income, and employment. The study was conducted in 1984-85 and included 163 respondents consisting of 18 reaper owners, 41 non-owner users, 37 non-users and 58 harvesters from Bataan province, and 9 reaper owners from Pampanga **(Fig. 3)**. A dealer and a manufacturer were also interviewed in both areas. Both areas were chosen as survey

sites because of their high reaper population; Bataan for the AR120 reapers and Pampanga for the CAAMS-IRRI model.

Results and Discussion

The Study Areas and the Respondents

Bataan and Pampanga have features favoring reaper acceptance. These include scarce farm labor, employment abroad by many farm workers, extensive irrigated land with double rice cropping, a reliable dealer selling the imported reaper, and a local manufacturer producing the CAAMS-IRRI designed reaper.

Of the 27 reaper owners surveyed, 24 were farmers, 5 had acquired more than 1 reaper, and 25 purchased their machines individually, mostly for cash. Reaper owners were slightly younger, better educated, and had larger farms and yields than non-owner users and non-users. They were also wealthier and most owned other farm machines.

Adoption and Use Patterns

Owners learned of the reaper through interaction with manufacturers and dealers and field demonstrations. Adoption spread quickly because of custom hiring by owners and was highest in 1984 (Fig. 4). Ninety-three percent of owners engaged in custom work which was normally performed within a 5-km radius of their homes.

Reapers harvested an average of 45 ha per year. Fourteen per cent was on the owner's farm and the remaining 86% was custom work. Custom hiring was common and the imported reaper was more widely used for this purpose.

A major reason for buying the reaper was to generate income from custom hiring. Major reasons for use of the reaper were unavailability of harvest labor during peak periods, the high cost of hand harvesting, and the rapid, timely harvest achieved with the machine.

Fig. 4 Map of study areas, Bataan and Pampanga, 1984-85.

Impact of Reaper Adoption

Timeliness and ease of operations – All reaper owners experienced 1-14 day harvest delays employing manual harvesting. Ninety-six percent indicated reaper use eliminated these delays. They estimated an average time savings of 6 days per crop season (Table 1). Time saved was used for leisure, off-farm and nonfarm work, and increased on-farm work.

Ninety percent of the owners and users encountered no difficulty hiring people to gather, haul, and pile reaper-cut palay. The unidirectional orientation of the straw and the space between rows made gathering and hauling less arduous.

In addition to handling ease, 83% of the owners (Table 2) and 93% of the users indicated mechanically cut palay dried more uniformly and quicker (1 day for the repear-cut palay as against 2 days for the manually-cut). Twenty-one percent of the owners indicated mechanical reaping resulted in faster, easier threshing and reduced threshing losses. Fifty-nine percent indicated it permitted faster, easier,

Table 1 Impact of Reaper on Time Saving, 24 Reaper Owners, Bataan and Pampanga, 1984-85.

Reaper owners indicating:	
Time savings	24 (100)[a]
No time savings	0
Number of days saved:	
1–4 days	10 (42)
5–7 days	7 (29)
15 days	3 (12)
(Average = 6.25 days)	
No response	4 (17)
Use of time saved:	
Leisure	9 (24)
Off-farm work [b]	11 (30)
Nonfarm work [c]	10 (27)
Other farm work [d]	5 (14)
No comment	2 (5)

Remarks: a–Number in parentheses are percentages. b–Includes vegetable, fruit and flower gardening, and custom work with reaper, thresher, and power tiller. c–Includes repair of farm machines, carpentry, and business. d–Includes land preparation, rebuild levees, cleaning dikes, and weeding.

Table 2 Effect of Reaper on Other Farm Operations, 24 Reaper Owners, Bataan and Pampanga, 1984-85.

Item	No. of owners reporting
1. Does reaper affect paddy drying?	
Yes	20 (83)[a]
No comment	4 (17)
If yes, how?	
It shortens drying time	18 (78)
Drying is uniform	4 (18)
Grains are cleaner and there are less impurities	1 (4)
2. Does reaper affect mechanical threshing?	
Yes	7 (29)
No	17 (71)
If yes, how?	
Threshing is faster and easier	3 (43)
Reaper use facilitates scheduling of threshing	1 (14)
Losses are Lower	1 (14)
Reaper-cut palay is more difficult to thresh	2 (29)
3. Does reaper affect land preparation?	
Yes	14 (59)
No	8 (33)
No comment	2 (8)
If yes, how?	
Land preparation is more rapid	11 (64)
It can be done earlier	3 (18)
Land preparation is more thorough	3 (18)

Remark: a – Numbers in parentheses are percentages of total.

Table 3 Estimated Losses with Manual and Mechanical Harvesting, 24 Reaper Owners, Bataan and Pampanga, 1984-85.[a]

Item	Manual (before reaper adoption)	Mechanical (after reaper adoption)
	No. of owners reporting	
Difference in grain losses	19	
No difference	5	
For those who indicated difference:		
Lower loss with reaper	1	18
Estimated loss:	(% of yield)	
Imported reaper (7)[b]	2.0	0.5
Local reaper (7)	3.0	1.5
Average (14)	2.5	1.0

Remarks: a – In field measurements of grain loss, the IRRI Engineering Department (1985) obtained harvesting losses of less than 1% using the reaper, based on replicated samples taken in farmers' fields. b – Numbers in parentheses are number of observations.

earlier, and more thorough land preparation because both weeds and rice stubble were removed.

Harvest costs – In Bataan, harvest laborers are distinct from those handling and stacking the crop. They are paid in cash either by the day, by the hectare, or on an area basis. The average harvest cost for reaper users was $15.95 and for non-users it was $18.33 per ha. With the mechanical reaper the farmer saved $2.37/ha. In contrast, a common form of contractual arrangement in Pampanga province is the patas system in which harvesting and handling labor are a single group and are paid in kind. Of the gross harvest, 20% is given to the harvesters and 80% is retained by the farmer. Of the harvesters' share, 22.5% (4.5% of gross output) goes to the mechanical reaper if the group opts to hire one, another 25% to the mechanical thresher, and 52.5% is retained by the group as payment for hauling and stacking the harvest.

Output or yield – Reapers have no direct yield effect. However, 18 (75%) of the 24 farmer-reaper owners indicated decreased grain loss from reaper use **(Table 3)**. Fourteen estimated average grain loss at 2.5% with manual harvesting and 1% with the reaper. These estimates were not, however, quantified and are very small. Reasons cited for reduced loss were slow cutting speed, gentle laying action, uniform distribution within rows, complete cutting, and minimal problems with dishonest laborers. In contrast, a comparison of inputs and yields for reaper non-owner users and non-users showed reaper use had no direct yield impact. Using similar land preparation methods and inputs, both user and non-user groups had similar yields at about 3.9 t/ha.

Labor use – Reaper operation and manual cutting of corners required about 2 labor days/ha. In contrast, manual harvesting averaged 17 labor days/ha, although 1-2 h/day were lost to breaks, snacks, and poor supervision. Gross labor displacement ranged from 13 to 15 labor days/ha. The reaper did replace harvest labor.

Income and employment of landless labor – Sixty-nine percent of the sample harvesters interviewed in Bataan were landless and the remainder had farms averaging 0.9 ha. Laborers indicated manual harvesting provided 22% of their total annual household income. The reaper displaced 13-15 days/ha and reduced harvest wages by up to 47%. Average household income was $547 per year, with 29% of the sample falling below $258/yr. Using the reaper, harvest payments were redistributed; mainly to machine owners and away from the landless calss **(Fig. 5)**. This income reduction greatly affected lower income and nonfarmer

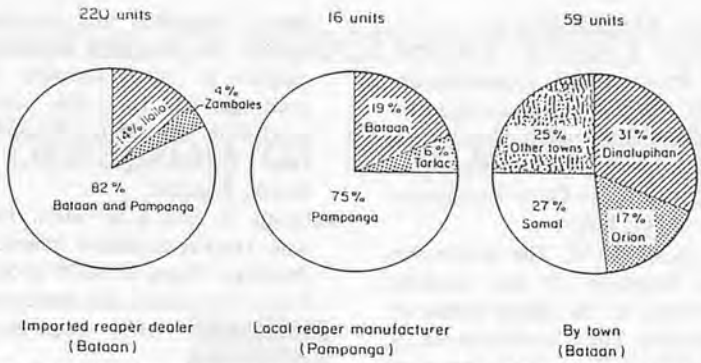

Fig. 5 Distribution of imported and local reaper units sold by two distributors in survey areas, Bataan and Pampanga, 1982-85.

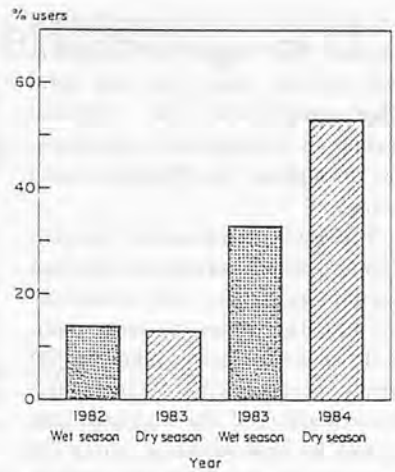

Fig. 6 Adoption of reapers by selected farmers. Bataan 78 respondents. 1982-84.

groups. A case study in one of the sample villages indicated immigration of seasonal laborers from other provinces had declined markedly since introduction of the reaper (Crissman, 1985). Employment outside the village was difficult to obtain because workers had little education, limited access to information about employment opportunities, and few contacts to assist them in securing jobs. Job applications were also expensive because of high transportation costs and the time taken from daily livelihood activities.

Profitability of Mechanical Reapers to Owners

In late 1982 and early 1983, reapers were a highly profitable investment. Some owners reported reaper earnings were sufficient to pay for the machine in less than a year. Custom work generated an average 7% of the total annual income for reaper owners. However, economic analysis showed the imported reaper declined in profitability after 1985. This is illustrated by the breakeven curves in **Fig. 6**. The computation was based on a contract rate of $20.65/ha for both mechanical or manual reaping; for mechanical reaping, 25% of the contract rate goes to labor and $2.58/ha to fuel and oil; annual costs for taxes, insurance, repair and maintenance are 7% of the initial reaper cost; the reaper cuts 45 ha/yr and has 5-year life. The imported reaper was profitable in late 1982/early 1983 when interest rates were 20-30% and the initial cost was only $1,091–$1,774. In 1985, interst rates increased to 40% or more and the investment price increased to $1,950. Lack of profitability resulted in sharply falling sales. Devaluation and import restrictions should have favored sale of locally-produced reapers, but these effects were overpowered by high interest rates, inflation, and falling wages for manual reaping.

Problems and Constraints

The reaper had limitations and technical problems. It did not operate effectively in small, wet, weedy or muddy fields, or when crops are lodged. Reaper use was also reduced by mechanical problems such as broken sickle blades. Locally fabricated models were not durable and service was inadequate. Reaper owners preferred the imported reaper because it was easier to operate and transport, and more reliable. The disadvantage was price $2,400 versus $1,400 (Stickney 1986) for the locally produced unit in mid 1983. The price difference would have been greater if exchange rates and tariff structures had not been favorable for imported equipment. In this case government policies discouraged local production by subsidizing imports (David 1983).

Summary and Conclusions

The mechanical reaper gained rapid acceptance from both Filipino manufacturers and farmers when first introduced in late 1982.

Reaper owners and non-owner users indicated reaper use had both advantages and disadvantages compared with manual reaping. Advantages included faster harvesting and less labor, reduced cost, minimized grain loss, quicker handling and drying, faster and easier threshing and land preparation, and increased income for reaper owners from custom hiring. Reaper non-users also benefited indirectly as a result of reduced harvest wages caused by increased competition among harvest laborers for available harvesting contracts. The reaper also had some disadvantages: it displaced labor and reduced the income of laborers with few alternative income opportunities.

The present analysis implies a negative welfare impact from use of the reaper. Although the machine adversely affected the employment opportunities and income of harvest laborers, it was attractive investment for owners and did reduce production costs. The deterioration in the income of harvest workers

was not only a result of mechanical reapers. The impact of inflation, high interest rates, and low farm prices contributed to a general decline in employment opportunities throughout the Philippine rural sector.

The study demonsrates that government policies affecting exchange and interest rates, credit availability, and the value of farm commodities were closely linked to the private profitability of the reaper. Overvaluation of the exchange rate tended to bias resource allocation in agriculture toward capital-intensive, labor-saving innovations. Changed economic conditions in 1985 produced a sharp reduction in factor price distortions. These adjustments sharply reduced the profitability of the reaper and effectively reduced demand to zero.

From a technical viewpoint, the reaper is an impressive piece of technology that has met essentially all the original design, performance, and economic targets set for it when first introduced to Filipino manufacturers.

The Philippine experience with the reaper, however, highlights the need to remain sensitive to the needs of disadvantaged groups. This awareness is particularly needed in engineering technologies many of which tend to be labor-saving. And, because engineering developments normally require considerable time to perfect, every effort should be made to bring current efforts into consonance with future needs.

REFERENCES

Asian Productivity Organization. 1983. Trends in farm mechanization and farm machinery supply in the region. Proceeding of the Symposium on Farm Mechanization. APO, Tokyo.

Ayob, A.M. 1979. The economics and adoption of the combine harvester in the Muda region of Malaysia. The Consequences of Small Rice Farm Mechanization Project. Working Paper No. 10. IRRI.

Bai Ling. 1986 Wheat and paddy reapers in China. Pages 329-339 in Small Farm Equipment for Developing Countries. IRRI, Los Banons, Laguna, Philippines.

Crissman, L. 1985. Livelihood among landless laborers after introduction of mechanical reapers. IRRI Engineering Department seminar paper. IRRI, Los Banos, Philippines.

David, C. 1983. Government policies and farm mechanization in the Philippines. The Consequences of Small Rice Farm Mechanization Project. Working Paper No. 95. IRRI.

David, P. 1968. The mechanization of reaping in the Ante Bellum Midwest. Research Center in Economic Growth, Department of Economics, Stanford University, U.S.A.

Duff, B. 1979. Grain losses in small rice post production systems in the Philippines. Paper presented at summer meetings of American Society of Agricultural Engineers. Winnipeg, Canada.

Manalili, I., Ma. Ji and B. Duff. 1981. Technical and economic factors in adopting mechanical reapers to small farmers. Proceedings of the 4th annual workshop on Grains Post Harvest Technology. IRRI, Los Banos, Laguna.

Rahman, Z. and K.M. Butt. 1986. The tractor-mounted reaper in Pakistan. Pages 359-370 in Small Farm Equipment for Developing Countries. IRRI, Los Banos, Philippines.

Stickney, R.E., G.C. Salazar, H.T. Manaligod, F.S. Juarez, B. Duff, C.W. Bockhop and C.P. Fernandez. 1986. CAAMS-IRRI mechanical reaper: experiences in the Philippines. Pages 341-358 in Small Farm Equipment for Developing Countries. IRRI, Los Banos, Philippines.

Toquero, Z., C. Maranan, L. Ebron and B. Duff. 1977. Assessing quantitative and qualitative losses in rice post-production systems, presented at a FAO workshop on Post-Harvest Rice Losses, Alor Setar, Malaysia. March. ■■

Status of Mechanization of Harvesting and Threshing of Soybean in India

by
S.K. Tandon
Scientist-2
Div. of Agric. Engg.
I.A.R.I.
New Delhi 110012, India

J.S. Panwar
Prof.
Div. of Agric. Engg.
I.A.R.I.
New Delhi 110012, India

Abstract

Soybean, one of the oldest cultivated crops of the world, is still being harvested by sickles and threshed by treading of bullocks or by threshers in India. Ordinary combines have been used for performing the function of cutting and threshing. As harvest losses account for 80% of total losses, many types of attachments like floating cutterbar and cornhead cutting mechanism have been used to reduce the harvest losses.

Introduction

Soybean (*Glycine max Merr*) is one of the oldest cultivated crops of the world. It is known to have been grown in China and Japan for thousands of years. It is referred to as the "meat of the world", because it is the cheapest source of protein and oil. The problem in India is shortage of protein in the diet and soybean, which contains 40% protein, is a rich source of protein to cover the deficiency.

It is not known exactly when soybean was first introduced in India. Since 1982 a small black seed variety was grown in a Nagpur farm. Lately, however, many high yielding varieties of soybean are being grown, namely, Harsoy, Bragg, Lee Hardee, Punjab 1, etc. in India. The total area planted to this crop is about 43 000 acres with a production of nearly 6 000 t in contrast to U.S.A. which has 71.6 million acres of land planted to soybean with a production of 1 736 million bushels.

During recent years greater interest has been given to the cultivation of soybean on account of its dietic, industrial, agricultural and medical importance. A number of research projects have been undertaken on the production and processing of soybean in India. An All-India Coordinated Project on cultivation of soybean was started at Jabalpur and Pantnagar in 1967 with the help of experts from the University of Illinois, U.S.A. The Agricultural Engineering Division of Jabalpur Agricultural University was entrusted with the task of developing harvesting and threshing machinery for soybean. Efforts done in India and abroad on harvesting and threshing techniques of soybean are reviewed in this paper.

Harvesting and Threshing Techniques

Harvesting

The soybean crop is generally harvested by uprooting it or by cutting with sickle. In countries like Korea, China and Japan, harvesting soybean using short blade-knives is still reported. In some areas the farmers pull the plant out by wrapping a cloth around their hands to protect the palms from injury. However, harvesting and threshing machinery are being used in western countries for harvesting the soybean crop.

Threshing

Various methods of threshing soybean are as follows:

i) *Manual threshing* – After harvest, the crop is left in the field for curing. In a number of countries threshing is done by bamboo flails or by pulling a log of wood or stone roller over the crop or by large-animal trampling. Recently, a number of threshers have been developed for the crop. However, the success of their use is limited due to a high percentage of damage to the grain which is reported to be as high as 40%.

ii) *Power threshers* – In India soybean threshers have been developed at the G.B. Pant University of Agriculture and Technology, Pantnagar, and J.N.K.V.V., Jabalpur. The latter University obtained a 'Vogel' thresher from U.S.A. and conducted trials on it. The thresher

consisted of a beating drum and a concave with stationary fingers. The use of fingers on the concave and on the thresher was observed to yield excessive damage to the grain and seed within a speed range of 300-700 rpm(14). The removal of the teeth from the concave was recommended for better threshing. However, the removal of fingers resulted in loss of some quantity of grain with chaff, particularly, at lower speeds. **Table 1** gives the cleaning efficiency and grain losses in the use of the Vogel thresher.

At an average moisture content of 6.5% and cylinder speed of 350 rpm, 11.53% grain damage was reported(8).

Soybean threshers have also been designed at G.B. Pant University of Agriculture and Technology.

Table 1 Grain Losses and Cleaning Efficiency of Vogel Thresher (8)

S. No.	Grain loss with chaff	Grain damage	Cleaning of threshed grain
1.	0.50%	9.5%	99.3%
2.	0.63	10.3	97.3
3.	0.73	14.8	98.9
Average	0.65	11.53	98.5

Singh(14) observed that feed rate, concave clearance and type of concave have direct effect on the losses as given in **Tables 2** and **3**.

Table 2 gives the effect of feed rate on losses of soybean at a cylinder speed of 2 000 rpm, concave clearance of 1.03 cm and at a moisture content of 9.15%. At a feed rate of 1.15 kg/min., the minimum seed damage was 3.6% in the Swanson type thresher developed at Pantnagar. At a feed rate of 4.40 kg/min., the minimum seed damage was 1.2%. In the same thresher, as the feed rate increased the damage also increased. However, in the Swanson thresher, as the feed rate increased the seed damage decreased(14). The damage in the first thresher was greater with the increased feed rate because the quantity of the fed crop was less than the capacity of the thresher. Also, as the same crop was threshed repeatedly with the cylinder greater damage occurred.

Table 3(14) shows the effect of cylinder concave clearance on seed loss, seed damage, threshing efficiency and cleaning efficiency.

At a cylinder speed of 2 000 rpm and moisture content of 9.15%, concave clearance of 2.0 cm gave minimum damage of 2.0% and a threshing efficiency of 96.8%.

After four years of consecutive research and development at Pantnagar, Singh(14) developed a small and high capacity soybean thresher which had an output capacity of 2 to 3 q/h. The cost of the thresher was Rs.4 000 (US$ 400). The thresher consisted of a rasp bar type cylinder, open concave and separating and cleaning unit. The seed damage was higher at low feed rate and low cylinder concave clearance. The breakage was a minimum of 5.14% at a feed rate of 433 kg/h and a moisture content of 10% (wb). The unthreshed losses were found to be proportional to the feed rate.

iii) *High capacity soybean thresher* – The high capacity soybean thresher had an output capacity of 7 to 9 quintal/h and cost Rs.8 000 ($800). It consisted of a feeder conveyor, rasp bar cylinder, open concave, strawwalker, sieve, blower and grain elevator. The main feature of the thresher were its high capacity and lesser seed damage.

Table 2 Effect of Feed Rate of Performance of Soybean Threshers (14)

Thresher	Feed rate (kg/min)	Seed loss (%)	Seed damage (%)	Threshing efficiency (%)	Cleaning efficiency (%)
Swanson type soybean thresher	0.30	1.8	3.8	94.0	94.8
	1.15	1.9	3.6	94.6	96.0
	1.60	3.2	4.4	94.2	96.4
	1.95	3.4	5.0	93.8	94.7
	2.4	3.8	3.0	96.0	96.2
	2.3	5.0	1.5	96.8	99.6
	3.4	6.0	1.5	96.2	96.2
	4.4	6.5	1.2	96.0	96.2

Table 3 Effect of Concave Clearance on Performance of the Thresher (14)

Thresher	Concave clearance (cm)	Seed loss (%)	Seed damage (%)	Threshing efficiency (%)	Cleaning efficiency (%)
Swanson type thresher	1.5	2.2	3.4	97.6	96.8
	1.7	2.0	2.8	98.4	96.0
	2.0	2.4	2.0	96.8	96.6
	2.3	4.2	2.0	94.9	97.2

Soybean Combines

Ordinary grain combines – Nave et al. (10) observed that the use of combine resulted in the harvesting losses of about 10% of the crop yield. The higher losses occurred at the rear of the combine due to thin crop stands, low branches, low level of pods and uneven ground. With the level ground these combines were able to cut as low as 3 to 4 in, but with low cuttings. The loss at the cutterbar was 9.85%.

In the same study the harvest losses varied from 9.8% to 19.3%. Eighty per cent of all losses were field losses and consisted of 61% shatter, 22% lodging and stalk, and 17% stubble losses. The pre-harvest losses were negligible when harvesting was done at moisture above 10%. Soybean losses could be

divided into three categories:

1. Pre-harvest losses
2. Header losses
   a. Cutterbar loss
   b. Reel loss
   c. Auger loss
3. Through combine

Fig. 1 shows a pictorial representation of soybean harvest losses(6). In header losses, it appears that shatter losses were maximum at 61%. These shatter losses depend upon moisture content of the beans; combine speed; ratio between reel and combine speed; reel height variety of crop; and auger speed.

With the ordinary grain combines there were about 80% header losses. Therefore, attempts were made to reduce these losses by incorporating different attachments to the cutterbar.

Combine with floating cutterbar – Low cutting height, essential for low harvest losses, could be obtained by using floating 'cutter bar' or 'bean buckets' developed by Dean(4). The floating cutter bar was free to float on the ground even though the combine itself tilted from side to side due to uneven ground. The knives were located about 10 in. forward from the original position of the cutterbar and were free to float on the side plates running over each row of beans. The knife was free to bend up or down on the ends or in the middle which permitted the knife to follow the contour of the ground leaving a stubble height of only 3 cms.

The floating cutter bar made more room for bean stalks to change direction at the cross auger and thus reduced recutting and shatter losses. The floating cutterbar reduced losses(4) by reducing the stubble height than obtained with a standard header as given in **Fig. 2**(4).

The use of floating cutterbar resulted in 26% less harvest losses as compared to the losses with a standard header. Other advantages of floating cutter bar were as follows:

1. A highly significant reduction in header losses;
2. Ability to cut uniformally even when the sorghum plants are irregularly arranged on the ground;
3. High forward speed for the same header loss;
4. Some degree of rock protection for the header; and
5. Smoother crop feeding under platform.

Air jet attachment – This header design was proposed by an agricultural engineer design class at the University of Illinois in 1969. Tate and Nave(10) observed that although shatter losses by cross-auger occurred at the cutterbar, a large amount of shatter losses were caused by the cross-auger. The opposing direction of movement of the reel and auger created high acceleration of the plant material. As the plant material was conveyed forward to the center of the grain platform, many beans were shattered and thrown out of the cutterbar. The cutterbar and reel also caused some shattering. To avoid excessive shatter losses caused by the cross-auger on the conventional grain platform, it was proposed to move the cutter bar forward 60 to 90 cm and to direct the cut material from the

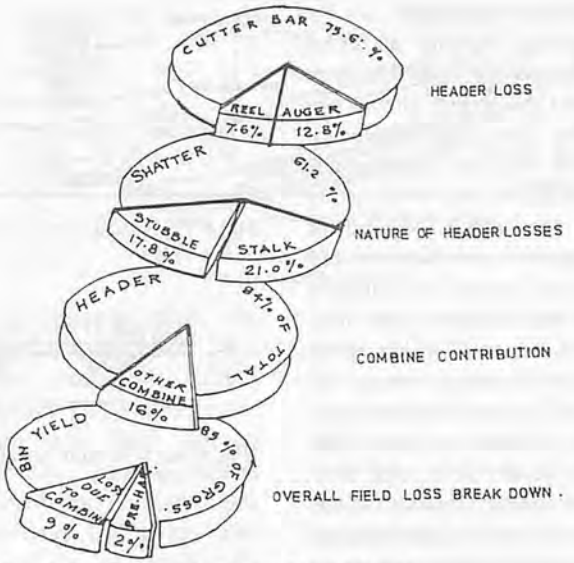

Fig. 1 Breakdown of soybean harvest losses.

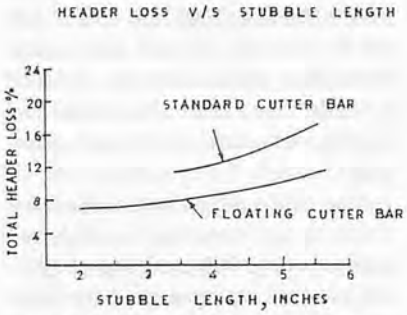

Fig. 2 Influence of stubble length on header loss louver bar vs standard cutter bar.

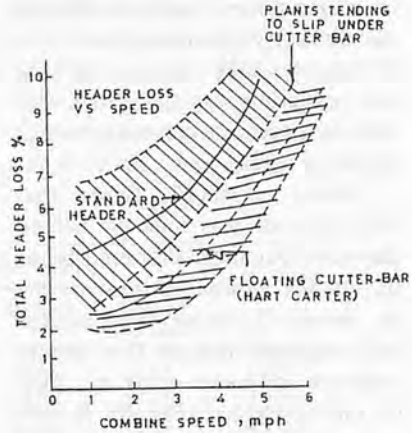

Fig. 3 Header loss forward speed characteristics of Hart Carter floating cutter bar vs standard cutter bar.

extended cutterbar back to the cross-auger by blasting air from directly behind the cutterbar rearward toward the auger. The air was supplied by two centrifugal fans at the back edge of the headers (Figs. 4 and 5).

Moving the cutter bar 60 cm forward required an extension of the framework under the standard header and of the sickle drive arm. The cutter bar and sickle were attached in the same manner as they were on the standard header.

The area between the front edge of the old header floor and new cutter bar location could be fitted in with sheet metal to provide the bottom surface of the air duct. A semi-circular section of the pipe was welded behind the cutter bar to form front of the air outlet. From this outlet, air was directed towards the table extension to deliver cut material to the cross-auger.

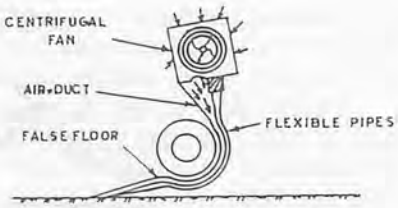

Fig. 4 Cross-section of air conveyor header.

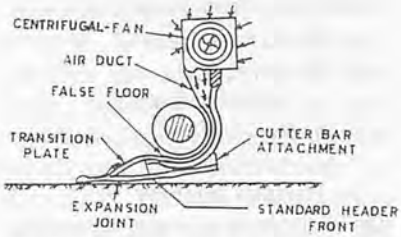

Fig. 5 Header cross-section showing air passage.

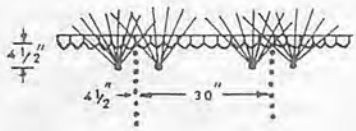

Fig. 6 Air flow from nozzles as used on test stand.

Fig. 7 Nozzle support with proposed pick up guard.

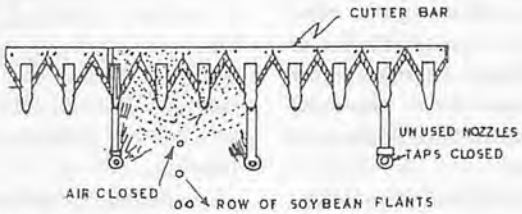

Fig. 8 Air flow directed to area of primary cutting.

The air conveyor header provided an air stream at a high velocity of 2 500 cu.ft/min, right behind the cutterbar and directed towards the rear of the grain platform (Figs. 6 and 7). When the air conveyor header was used in conjunction with a floating cutter bar, harvesting losses were reduced by 43%. Only 1/3 of the loss reduction was associated with the air stream which was enough to justify its use.

Tunnel et al.(17) found that when the air was injected behind the cutterbar most shattered beans fell on the ground in front of the air stream. To solve this problem they suggested that air flow should originate at some point in front of the cutter bar (Fig. 8). So the air nozzles were located 15 cm forward of the cutter bar. With a 2.5 cm nozzle, only 15 to 20 additional horsepower was required for a 4.5 m header to deliver air at 2 500 cu.ft/min. The fan was mounted directly above the feeder house of the combine and the air was directed to the individual nozzles through 3.8 cm flexible lines from a plenum chamber placed directly below the outlet. Twelve extended air guards spaced 38 cm were used for a 4.5 m header.

Table 4 shows the reduction in the harvesting losses obtained by using air jet when harvesting soybean, at 12% moisture, in 76 cm rows and 20 cm rows (11). Loss reduction with the use of air jets when harvesting 76 cm rows was 46% as compared with 67% when harvesting 20 cm rows. This was due to the plants being evenly spaced, allowing adequate air stream to pick up more of the shatter losses. When soybean moisture was above 14% the use of air jets did not significantly reduce harvesting losses.

The air-jet incorporated with a floating cutterbar was found to reduce harvesting losses from the normal range of 8 to 10% to 3% or less.

Tate and Nave (16) compared the different header attachments, (Table 5). The average of total losses obtained with a floating cutterbar were 6.5%, a reduction of 26% as compared to the losses from the standard header. The air conveyor header significantly reduced header losses as compared to the losses from other headers. The average total header losses with the air conveyor header were 4.96% compared to 8.75% for the standard header and 6.54% for the floating cutterbar. This reduction in the total header losses from the air jet header was primarily due to significant reduction in shatter losses.

Table 4 Header Losses Using Air Jets in Harvesting Soybean*

Row width (cm)	Attachment used: Floating cutterbar	Attachment used: Floating cutterbar with air jets	Reduction in harvest losses
76	5.3**	2.7**	46%
20	5.2	1.7	67%

* At 12% moisture content (4)
** Percentage of total yield

Table 5 Header Comparisons (16)

Losses (%)	Treatments		
	Standard	Floating cutterbar	Air conveyor
Shatter loss	4.00	3.73	2.61
Stubble loss	1.45	0.52	0.37
Lodged loss	0.20	0.16	0.13
Stalk loss	3.10	2.13	1.85
Total header loss	8.75	6.54	4.96

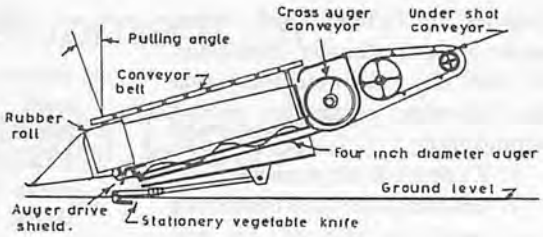

Fig. 9 Schematic diagram of initial experimental one-row soybean gathering unit.

Row-gathering unit – The row-crop harvesting system is similar to corn head harvesting system. The soybean row gathering unit shears the soybean stalk below the ground level while the plant is enveloped by a transporting device with the system quickly and gently grasping the plant before the stalk is cut. The plant vibrations are eliminated during the shearing action, hence shatter losses are reduced. The lodging losses are reduced by grasping the entire plant before transporting it into the header. A knife is used to cut the plant below the ground level and thus stubble loss are reduced.

Two methods were used by Williams and Richey (18) for shearing the soybean stalk. The first consisted of floating 10 inch vegetable knives mounted under the gathering unit on both sides of the row. The second cutting method employed a 60 cm diameter rotating disk with 3 evenly spaced 1.25 cm deep-wedge shaped knives.

For the initial grasping and enveloping the soybean plant, the principle of opposed rolls was utilized. Two pneumatic rubber rolls, in contact with each other, straddled the row and grasped the plant. The rubber rollers used were sufficiently pliable and avoided cracking the beans and they appeared to be adequately durable.

To help the plant move up to the cross-auger, a waxy conveyor belt carried by chains was provided above the rolls. A 10 cm diameter auger was placed in a trough behind the rubber rolls in place of a corn snapping rolls to convey loose beans shattered by the plant grasping, enveloping and conveying. The auger's second function was to convey the lower end of the plant while the top was carried by the belting. Plant transport to the threshing area was completed by the 35-cm cross auger conveyor (**Fig. 9**).

The rolls were 31 cm apart and the roller's pressure was about 5 psi. The rolls were tipped forward 25° from the vertical position in the direction of the combine travel. The gathering losses by this puller unit averaged only 28% of those with conventional grain platform.

Williams and Richey (19) conducted tests on the conventional header and puller header. They found that the stubble losses were reduced from 0.52 to 0.02 bu/acre and the average shatter losses decreased from 1.21 to 0.51 bu/acre, (**Table 6**). The stalk and lodging losses decreased when a puller header was used as compared to the conventional header. The following disadvantages of puller header were reported:

1. Large weeds and massive root system are lodged between the pulling rolls;
2. Some fallen and lodged plants were missed by the unit;
3. Steering the combine to keep the puller unit centered on the soybean was tedious and caused fatigue.

The authors recommended additional trials on many soybean

Table 6 Soybean Gathering Losses (bu/ac) (18)

M.C. of beans (%) (wb)	Conventional header					Puller header			Total
	Shatter	Stubble	Lodged and stalk	Recut	Total	Shatter	Stubble	Lodged and stalk	
7.0	2.49	0.08	0.00	0.12	2.69	0.42	0.16	0.51	1.09
7.0	0.97	0.03	1.20	0.16	2.36	0.67	0.00	0.22	0.89
17.2	0.30	0.40	0.55	0.05	1.80	0.05	0.00	0.00	0.05
16.8	0.72	0.09	1.18	0.14	2.13	0.17	0.00	0.06	0.23
15.7	0.91	0.12	0.42	0.05	1.50	0.25	0.00	0.10	0.35
15.6	0.94	0.31	0.63	0.12	2.00	0.31	0.00	0.00	0.31
15.0	1.26	0.91	0.42	0.00	2.59	0.33	0.00	0.03	0.36
14.4	0.95	0.41	0.73	0.00	2.09	0.39	0.00	0.44	0.83
13.9	1.20	0.37	1.04	0.02	2.63	0.65	0.08	0.19	0.92
13.6	1.21	0.46	0.43	0.00	2.10	0.84	0.00	0.25	1.09
14.3	1.20	1.59	0.43	0.00	3.22	0.40	0.00	0.12	0.52
14.0	1.80	0.47	0.87	0.06	3.20	0.54	0.00	0.21	0.75
13.5	1.56	0.47	1.47	0.05	3.55	1.08	0.02	0.35	1.45
13.1	1.45	1.49	0.86	0.00	3.80	0.97	0.00	0.10	1.07

varieties in different soil types, under various climatic conditions. It was also recommended that the following parameters needed optimization:

1. Rubber roll air pressure;
2. Grasping area (roll contacting area) as affected by roll spacing;
3. Operating height of the rolls from the ground;
4. Forward inclination (pulling angle) of the rolls;
5. Ratio of rubber rolls peripheral speed to combine forward speed.

Conclusions

From the literature review it is observed that the percentage of soybean crop damaged during threshing and combining has not decreased appreciably over nearly half a century. Soybean harvesting equipments perform their function in the same manner and as inadequately now as they did almost 45 years ago, when the first field tests were made (16). These facts indicate a critical need for research and development in soybean harvesting and threshing. Though some work has been done by Shri Bacchan Singh in India on soybean threshing, it is felt that a suitable soybean thresher should be designed and different machine crop interactions should be studied. The small farmer who cannot afford a combine needs to be provided with improved soybean reaper and thresher which requires more intensive development efforts.

REFERENCES

1. Annonymous. Soybean equipment conference. Soybean Digest, 1971, 31 (11) 26-28.
2. Annonymous. Special soybean needs gets attention. Soybean Digest, 1975, 35(7). 4-8.
3. Annonymous. New machinery. Soybean Digest, 1975, 35(7): 8-10.
4. Dean, L. Hoag. Properties related to soybean shatter. Trans. of ASAE, 1972. 15(3) 494-497.
5. Dunn, W.E., W.R. Nave and B.J. Butter. Combine header component losses in soybeans. Trans. of ASAE., 1973, 16(10) 1032-1035.
6. Grame, R. Quick. Laboratory analysis of the combine header. Trans. of ASAE, 1973. 16 (3): 30-135.
7. Grame, R. Quick. Reducing combine gathering losses in soybeans. Trans of ASAE, 1974, 17 (8) 817-820.
8. Jackob's, J.A. and S.V. Arya, Harvesting, threshing of storage of soybeans. Proceedings of conference on soybean production and marketing, Jabalpur, 1968, 20-23.
9. Lamp, B.J., W.W. Johnson and K.A. Harkness. Soybean harvesting losses – approaches to reduction. Trans. of ASAE, 1961, 4(2). 203-207.
10. Nave, W.R., D.E. Tate, and B.J. Butter. Combine header for soybean. Trans. of ASAE, 1972, 15(4) 632-635.
11. Nave, W.R. and R.P. Yoerger. Research Investigations. Soybean Digest, 1974, 34(8).
12. Nave, W.R., R.L. Cooper. Effect of Plant population and row width on soybean yield and harvesting loss. Trans. of ASAE, 1974, 17(7) 801-804.
13. Ruth Styn. Impact on Soybeans. Special Report 77, Agriculture and Home Economics Experimentation Station Bulletin, Iowa State University of Science and Technology, January, 1975.
14. Singh, Bacchan, Testing, design and development of soybean machine. Annual Reports, G.B. Pant University of Agriculture & Technology, U.P., 1968-71.
15. Sisodia, J.S. Scope for introduction of soybean in M.P. Proceedings of conference on soybean production and marketing, 1968, 20-23.
16. Tate, D.E. and W.R. Nave. Air conveyor header for soybean-harvesting. Trans. of ASAE, 1973, 16(1) 37-39.
17. Tunnel, J.C., W.R. Nave and R.R. Yoerger. Reducing soybean header loss with air. Trans. of ASAE, 1973, 16(1), 1020-24.
18. Williams, M.M. and C.N. Richey. An New approach to gathering soybeans. Trans. of ASAE 1973, 16(4).
19. Tandon, S.K. Studies on harvesting and threshing of soybean. Paper presented at XVII ISAE Convention held at IARI, New Delhi, Feb., 1980. ■■

Design and Development of Bullock-drawn Potato Digger

by
A.C. Varshney
Dept. of Rural Engg.
Gujarat Agric. Univ.
Sardar Krishi Nagar 385506
Gujarat, India

K.V. Patel
Dept. of Rural Engg.
Gujarat Agric. Univ.
Sardar Krishi Nagar 385506
Gujarat, India

A.S. Patel
Dept. of Rural Engg.
Gujarat Agric. Univ.
Sardar Krishi Nagar 385506
Gujarat, India

Abstract

A functional prototype of potato digger of simple design operated by a pair of bullocks was developed and evaluated on the farmer's field at Banaskantha District of Gujarat State, India. The effective field capacity and draft requirement of the implement varied from 0.325 to 0.50 ha/day and 75.0 to 95.0 kg, respectively. About 49.0% of the potatoes were exposed. The proportions of cut and bruised potatoes were 0.08% and 1.7%, respectively. The digger was able to dig 100% of potatoes. Labour requirement for picking potatoes was found to be about 130 to 135 man-h/ha.

Introduction

The traditional method of harvesting potatoes by dismantling the ridges with the help of a weeding hook or pickaxe is labour intensive. Its labour requirement is about 600 man-h/ha. About 10% of the tubers are cut or bruised during manual harvesting. This directly affects the quality of the produce and adversely affects the income of the farmers. The conventional animal-drawn potato diggers consisting of a narrow digging blade and two moderately curved mould boards expose about 50 to 60% of the potatoes (5). The effective field capacity of the implement ranges from 0.6 to 1.0 ha/day. The undug and cut potatoes by this implement are about 2 to 6%. In some area of Bihar, a ridger is used to dig the potatoes. This implement can cover about 0.4 ha/day area and the proportion of leftover and undug potatoes is 11.5% (4). The operation of bullock-drawn potato digger developed by Gopalan and Anantharaman (1) was 2-5 times faster, reduced cost of operation to half and reduced damage of potato tubers as compared to the manual digging. However, the insufficient throat clearance caused accumulation of potato haulms and weeds obstructing smooth working and the dug potatoes were buried again under the loose soil. Singh and Sinha (4) reported that a Coimbatore digger requires high draft and two persons for controlling the implement besides difficulty in turning and low output. Singh et al (3) developed a flat throat type bullock drawn potato digger which gives potato tuber exposure of 85-90%. The V-shaped shovel-type potato digger with mild steel rod on the rear side exposed 90.18% of the potatoes with less than 0.5% cut and bruising (2). The quantity of undug potatoes was 0.5%. The tractor-drawn digger elevators work satisfactorily, but owing to high initial cost, they are beyond the reach of small and medium farmers. Therefore, a project was undertaken to design and develop a simple bullock drawn digger which can perform satisfactorily.

Materials and Methods

Design Parameters

(i) Functional requirement – The digger should be able to operate at a proper depth to dig maximum possible potatoes. The transverse dimensions of the cutting unit should be kept such that all the tubers of the plant are dug. The exposure of the dug tuber should be maximum with minimum cutting and bruising. This is possible only when the implement will handle less soil and more potatoes. Therefore, the size and shape of the working parts are very important. The digger should not be clogged due to the large quantity of haulm available in the field. Therefore, the vertical distance between the digging unit and rear end of the beam should be sufficient.

(ii) Power requirement – The implement should not consume more power and as such an average pair of bullocks should be able to pull the implement under different soil conditions for potato cultivation.

(iii) Constructional requirement – The implement should be simple in construction which can be prepared by local blacksmiths. The

material of construction and workmanship of the implement should provide sufficient strength for withstanding loads under different field conditions. The implement should require minimum care and maintenance. The digger should have provision for adjustment of depth depending upon the size of the bullocks and nature of the crop. The implement should be well-balanced for easy operation.

Constructional Details

The constructional features of the bullock-drawn potato digger mainly consist of a beam, lifting handle, shank, and a digging unit (**Fig. 1**). The digging unit has one bar share which is 10 cm outside the shoe and is supported by a bracket and wedge. This arrangement provides the stability and eliminates bouncing of the implement during operation. On the rear side of the shoe one sweep-like structure is welded. The overall width of the sweep is 34 cm. The outer part of the wing of the sweep is cut as shown in the figure to prevent the damage of the potato tubers of the adjacent ridge. For better separation of the potatoes two circular bars of 1.2 cm diameter and 17.0 cm length are welded on the rear side of the sweep such that the distance of each bar is 8.25 cm from the middle of the sweep. Two additional bars of 19.0 cm length are mounted on both sides at the outer end of the wing of the sweep at a distance of 16.25 cm from the middle of the sweep. In order to avoid clogging of implement by haulms, the digging unit is mounted on 21.0 cm long shank providing a throat clearance of 51.5 cm. A wedge is provided for tilting the bottom for adjusting the angle of penetration and depth of working.

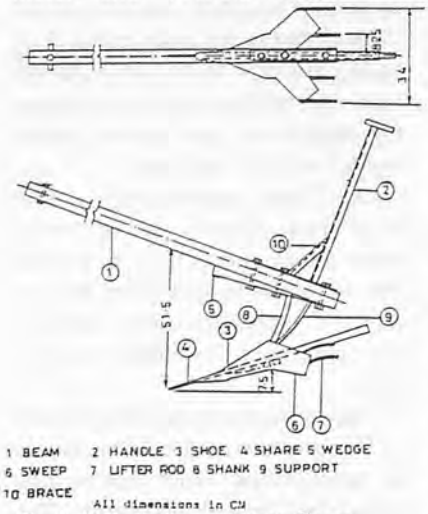

Fig. 1 Bullock-drawn potato digger.

Table 1 Comparative Performance of Potato Digger and Local Indigenous Plough

Observation	Local plough	Potato digger	
		Moist soil condition	Dry soil condition
Moisture content of soil, %	8.7	8.7	5.8
Speed of operation, km/h	2.34	2.85	2.42
Angle of penetration	22.5°	22.5°	22.5°
Effective field capacity, ha/day	0.3 to 0.4	0.4 to 0.5	0.325 to 0.425
Draft, kg	85 to 95	75 to 85	85 to 95
Tubers dug, %	97.1	100	100
Tubers exposed, %	71.5	94	93.89
Tubers bruised, %	4.0	1.7	1.8
Tubers cut, %	1.0	0.08	0.08
Labour requirement for picking, man-h/ha	132	130	135

Results and Discussion

The local indigenous plough and the potato digger were tested on the farmers' fields with sandy loam soil conditions for a week. As per local practice light irrigation was given to the field and the haulms were not cut. In the second trial the digging of potatoes was performed under dry soil conditions. The results of the performance tests are shown in **Table 1**.

As evident from the performance data (**Table 1**) the potato digger developed at the Department of Rural Enginnering is better than indigeneous plough in all respects. The speed and effective field capacity are less for the indigeneous plough because of frequent clogging due to small throat clearance. The potato digger can perform well in various soil moisture conditions. However, the effective field capacity of the GAU digger is less than the conventional mould board digger which is due to the small spacing between rows. The row spacing followed in North Gujarat region is 35.0 cm only. The draft of the implement is also within the acceptable limits. The potato digger has been released by Gujarat Agricultural University for use of the potato growing farmers.

REFERENCES

1. Gopalan, S. and S.B. Anantharaman, 1970, Bullock-drawn potato digger. Indian Farming, 19 (ii): 36-37.
2. Singh C.P. and I.K. Garb, 1977, Design, development and field evaluation of simple bullock-drawn and tractor-drawn potato digger. Indian J. Agril. Sci, 4 (2): 104-108.
3. Singh V.M. Shyam, R. Singh and N.L. Meena, 1981, Design, Development of bullock-drawn potato digger, J. Indian Potato Asscc. 8 (1): 15-23.
4. Singh V.K. and A.K. Sinha, 1980. Study of bullock-drawn potato harvesting equipment, J. Indian Potato Assoc. 7 (2): 102-106.
5. Verma, S.R., Equipments for mechanizing potato cultivation in Punjab, Bulletin. Potato cultivation in Punjab, Punjab Agricultural University, Ludhiana.

Comparative Performance of Machine Milking Methods in Turkey

by
Muammer Nalbant
Asst. Prof.
Dept. of Agric. Machinery
19 May University
Turkey

Poyraz Ülger
Assoc. Prof.
Dept. of Agric. Machinery
Thrace University
Turkey

Abstract

This study has been done to determine some data in hand milking and machine milking, e.g., work routine, times, and number of cows milked per man-hour, and economical herd size for different machine milking systems. This research was done with various hand milkers and 8 milking machines on five farms with varying numbers of dairy cattle. The research shows that there is a correlation between milking time Y and milk yield X. The work routine times were between 0.9-2.2 min/cow. The maximum numbers of milked cows per man-hour were 11 and 30 for hand milking and pipeline milking machine with 12 milking units, respectively. When there were less than 10 cows, machine milking was not economical compared to hand milking.

Introduction

Milking by hand is very difficult and tiresome. Several investigations have shown that on an average for stanchion barns, milking amounts to 40-60% of the total work in the stable. In loose-housing the corresponding figures were about 70-80%. With the increasing wage of labour it is obvious that every improvement in machine milking which increases output, i.e., number of cows milked per man-hour, is of importance (Claesson, 1977).

The types of machines used in this experiment were direct-to-can milking machine, bucket milking machine, pipeline milking machine, recorder milking machine, independent air and milk transport milking machine.

Literature Review

Krause (1980) reported that the relationship is between the average milk yield of herd and the mean milking time. Clough (1978) determined a relationship between the average milking time Y, min per cow, for 28 herds at morning milking and milk yield X, kg per cow by the regression equation $Y=0.207 X + 2.73$.

The normal milking characteristics of milking machines should be: about 50 kPa for vacuum level, 45-70/min for pulsation rate, 2.3/1 to 4/1 for pulsation ratio and property cluster mass (about 3 kg) for vacuum pressure (Yagcroglu, 1976; Weber, 1970; Smith et al 1978).

The milking machines affected the amount of man labour, lactation yield, under health and milk quality (Mein, 1978).

The labour efficiency depends on the skill of the milker, the milking characteristics of the cow, the performance of the milking machine and the ergonomic conditions for the milker in milking (Claesson, 1977).

Claesson (1977) also determined the required average times for milking routine at 0.27 min for stimulation of let down, 0.25 min put on cluster, 0.39 min for machine stripping, 0.17 min for emptying of recorder jar, 0.30 min change of cows, 0.05 min for concentrate feeding, 0.23 min for milking wasted time per cow in milking parlours with bucket milking machine. The milking capacity was 38.6 cows per man-hour.

Milking routine time ranged from 0.43 to 1.36 min per cow depending on mechanization level and number of stand in parlours of herringbone and tandem type in milking. However, the number of milked cows ranged between 38 and 118 cows per hour. The number of milked cows were 32-57 cows per hour per milker (Armstrong and Seltz, 1972; 1972; Price et al, 1972; Clough, 1978).

Materials and Methods

The following milking machines, which are commonly used n Turkey were tested:

Direct-to-can Milking Machines

a) (C1) Direct-to-can milking machine with one milking unit. This machine has 43 kPa vacuum level and 66 cpm pulsator speed and 2.5/1 pulsator ratio and 2.87 kg cluster mass.
b) (C2) Direct-to-can milking machine with two milking units which has 53 kPa vacuum level and 58 cpm pulsator speed and 2.3/1 pulsator ratio and 3.45 kg cluster mass.
c) (CP2) Direct-to-can milking with two milking units piston pulsator and has 35 kPa vaccum level and 60 cpm pulsator speed and 1.27 kg cluster mass.

Bucket Milking Machine with two Milking Units

(B2) This unit has 50 kPa vaccuum level and 58 cpm pulsator speed and 2.5/1 ratio and 2.87 kg cluster mass.

Pipeline Milking Machines

a) (P3) Pipeline milking machine with three milking units. This unit has 56 kPa vacuum level and 58 cpm pulsator speed and 2.5/1 pulsator ratio and 2.87 kg cluster mass.
b) (P6) Pipeline milking machine with six milking units which has 43 kPa vacuum level and 60 cpm pulsator speed and 2.3/1 pulsator ratio and 3.31 kg cluster mass.
c) (P12) Pipeline milking machine with twelve milking units has 50 kPa vacuum level and 60 cpm pulsator speed and 1.5/1 pulsator ratio and 2.91 kg cluster mass.

Recorder Milking Machine with Six Milking Units

This unit has 43 kPa vacuum level and 60 cpm pulsator speed and 2.3/1 pulsator ratio and 3.31 kg cluster mass.

Milking tests were conducted with foreign and domestic manufactured milking machines on the farms with varying numbers of cattle. Milking tests were made for at least 10 days on 5 farms that had 8 milking machines. C1 and C2 were tested on one farm and CW2, P6 and R6 were tested on another farm. In these tests, the total number of operators were 20 and the total number of hand milkers were 18. Cows were milked to compare by hand and machine, belonging to the same breed and the same milk yield in different barns on that farm. The cows were Brown Swiss of Montofon breed. As a result of these investigations the time requirement were determined and economical herd size were calculated. The milking yield of cows were determined according to TS 3003 (TSE, 1978).

The duration of the various routine operations were determined with a stopwatch and were classed as: i) milking time or essential time, and ii) working routine component times. The time-motion study considered feeding; changing cows or walking to and from cow; washing and drying tests; putting on cluster; removing cluster; and miscellaneous chores.

The obtained statistical data were appraised by the methods of Düzgünes (1975), Sokai and Rohlf (1968).

The number of cows milked per man-hour/or milking performance, was determined according to Clough (1978).

The calculations for economical heard size for milking machines were based on comparing the cost of machine milking and hand milking using Schweigmann's (1962) method with an equation as follows:

$$EHS = \frac{TPC}{TVCMH-TVCMM}$$

where,

EHS: Economical herd size, cow
TPC: Total fixed costs of the machine milking, TL per year
TVCMH: Total variable cost of milking by hand, TL per cow year
TVCMM: Total variable cost of machine milking, TL per cow year

Results and Discussion

Sometimes hand milking durations were longer or shorter than the machine milking periods. These situations vary according to the milker's performance and his job charge. For example, a milker can handle the teats of cow between 60-120 times per min. But the pulse number and the other milking characteristics of machine are fixed.

The milking rates ranged between 0.60-2.60 kg/min for hand milking and 0.23-1.50 kg/min for machine milking depending on the milker's performance or milking characteristics of the machine.

The regression equations that show a relationship between milk yield (kg per cow,X) and milking time (min per cow,Y) for machine milking and hand milking done have been calculated and are shown in **Table 1**.

The regression equations of hand milking first and second line, sixth and eighth line in **Table 1** were similar which used the same milkers and cows. The regression equation of P6 was accepted as the same for

Table 1 Regression Equations for Machine and Hand Milkings

Type of milking machine	Regression equations	
	Machine milking	Hand milking
C1	$Y=0.657X+3.148$	$\hat{Y}=0.932X+1.409$
C2	$\hat{Y}=0.534X+2.350$	$\hat{Y}=0.932X+1.409$
CP2	$\hat{Y}=1.128X+3.399$	$\hat{Y}=0.768X+2.328$
B2	$\hat{Y}=0.319X+3.611$	$\hat{Y}=0.513X+1.761$
P3	$\hat{Y}=0.424X+4.730$	$\hat{Y}=0.679X+2.155$
P6	$\hat{Y}=0.360X+4.601$	$\hat{Y}=0.423X+3.298$
P12	$\hat{Y}=1.066X+0.844$	$\hat{Y}=0.701X+0.832$
R6	$\hat{Y}=0.360X+4.601$	$\hat{Y}=0.423X+3.298$

Table 2 Mean Time of Six Elements in the Work Routine, Mean Work Routine Time, Maximum Number of Cows per Hour and Economical Herd Size for Nine Milking Methods

Milking method	Time walking to and from cow		Time of cow charging		Time of cow feeding		Time of teat washing and drying		Time of cluster putting		Time of cluster removing		Miscellaneous		Work routine	Maximum no of cows per hour	Number of milking units	Number of operators	Number of milked cows per man hour		Economical herd size cow
																			machines milking	hand milking	
	Min	%	Min	%	Min	%	Min	%	Min	%	Min	%	Min	%	Min/cow						
Stanchion barn																					
C1	0.28	26	–	–	0.18	17	0.20	19	0.22	21	0.06	6	0.12	11	1.06	56	1	1	9	7	Not economical
C2	0.29	26	–	–	0.18	16	0.20	18	0.26	24	0.05	5	0.12	11	1.10	54	2	1	16	7	12
CP2	0.33	17	–	–	0.32	17	0.35	18	0.52	27	0.09	5	0.32	16	1.93	31	2	1	11	8	Not economical
B2	0.37	31	–	–	0.17	14	0.24	20	0.21	18	0.05	4	0.15	13	1.19	50	2	1	21	9	17
P3	0.30	35	–	–	0.16	18	0.16	18	0.11	13	0.05	6	0.09	10	0.87	68	3	2	14	7	50
P6	0.30	20	–	–	0.21	14	0.35	24	0.25	17	0.05	4	0.32	21	1.49	40	6	3	15	8	64
P12	0.38	36	–	–	0.14	13	0.16	15	0.19	18	0.05	5	0.14	13	1.06	56	12	5	30	11	124
Parlor																					
R6 Stop start tandem (2x6)			2.07	48	0.20	9	0.31	14	0.24	11	0.05	2	0.36	16	2.23	26	6	3	13	8	71
R6 Static herringbone (1x6)			0.01	10	0.16	15	0.28	27	0.18	17	0.04	4	0.27	27	1.04	57	6	3	15	8	56

R6 because same cows were milked by the machine which had the same milking characteristics.

The regression slope of the equation of CP2 is larger than the others may be attributed to the fact that its cluster mass is lighter, being about 1.3 kg.

The regression equation of B2 is parallel to C2, P3 and R6. Their middle slopes were b=0.452 and b=0.377 and b=0.333, respectively.

There is a correlation between milk yield and milking time as milking time increases with milk yield increases.

The mean times of work routine components in hand milking were 1.5 min for walking to and from cow and discharging milk bucket and 0.6 min for washing and drying of teats and 0.2 min for miscellaneous chores.

The times of work routine components and economical herd size for nine milking methods are shown in **Table 2**.

There are considerable variations between the time required for each of the six elements of the work routine for the different milking methods. In general, these are due to the differences in operations and milking methods. But the long feeding time for CP2 compared to the others was due to giving of forage to cows. Also, the other cows were given concentrated feed.

The shortest and longest durations of the work routine components were cluster removing and changing of the cows or walking to and from cow in different milking methods, respectively. The durations in changing in stop-start tandem parlour was long due to distance between the milking parlour and loose house which was also long.

For the milking machine the total work routine durations were 0.87 min for P3 in stanchion barn and 2.23 min for R6 in stop start tandem parlour.

When the milking machines were used, the maximum number of cows per hour were 31-56 cows for direct-to-can milking machines; 50 cows for bucket milking machine; 40-68 cows for pipeline milking machine in stanchion barns and 26-27 cows for recorder milking machines in parlours depending on the unit number of the machines used. But the actual numbers of cows per man hour were 9-16 cows; 21 cows; 14-30 coes and 13-15 cows; respectively.

The numbers of milked cows per man-hour were 7-11 cows for hand milking and 9-30 cows for machine milking.

The size of herd is one of the important factors for the determination of mechanization level in milking. Therefore, an analysis for the economical herd size was determined for each different type of machine used (**Table 2**). The milking with C1 and CP2 were not economical compared to hand milking. The reasons were high gasoline price and light cluster which prolongs milking time, hence increased the milking costs.

The economical herd size were determined at 12 cows for direct-to-can milking machines; 17 cows for bucket milking machine; 50-124 cows for pipeline milking machines in stanchion barn; and 56-71 cows for recorder milking machines in parlour.

Conclusion

1. There is a correlation between milk yield and milking time.
2. The least work routine time was 0.87 min per cow for pipeline milking machine with three units in stanchion barn.
3. The number of milked cows per man hour for machine milking was higher than hand milking.
4. Machine milking was not economical compared to hand milking in milking methods tested when there were less than 10 cows.

REFERENCES

1. Armstrong, D.V. and C.O. Seltz. 1972. Milking parlor routine in double eight herringbones. J. Dairy Sci. 55 (5): 695.
2. Claesson, O. 1977. Modern aspect of milk production with special reference to the milking machines. International Dairy Federation 61st Annual Sessions. Stockholm, Sweden, 15 p.

(Continued on page 68)

Steering of Rear Axle Wheels in Three-axle Trailers

by
Mehmet Yilmaz
Dept. of Agric. Mechanization
Faculty of Agriculture
Yüzüncü Yil University
Van, Turkey

The dynamics of the wheels on the rear axle of trailers with three axles on a single body is studied. In this type of trailer it is known that the rear wheels slide when the front wheels are turned; and this sliding motion can be avoided by a synchronized steering of the rear wheels. The steering direction of the rear wheels should be opposite to that of the front wheels. The proper steering angle of the rear wheels depends on the distances between the axles, axle-length and the steering angle of the front wheels. Mechanical and hydraulic steering systems have been designed for the synchronized steering of the front and rear wheels.

Introduction

The dynamics of the single-body trailers with three axles differ from that of two-axle trailers. This difference is especially the result of non-linear movement because in three-axle systems, rear wheels slide unless suitable precautions are taken.

In ideal steering, the turning radii of all the wheels must intersect at a single point O and this point must prefarably be on the middle axle axis. Notwithstanding that this point O may also lie on the rear axle axis, this is not preferred since the turning radii of the wheels increase in this case. The fact that the turning centre must be on the axis of the middle axle brings with it the problem that the turning directions of the front and rear wheels must be opposite to each other. Since the middle axle axis is the most suitable one for the turning centre, the steering system must operate on the front and rear axles.

Middle and rear wheels may both slide during curved movements but as the middle axle is nearer to the centre of gravity, the slide is mostly encountered on the rear wheels. This sliding motion has two major disadvantages: i) It increases the resistance against the movement; and ii) Sliding tyres wear out in relatively short times.

The friction due to a slide can be avoided by a mechanism that changes the slide into a turning action using a suitable steering angle. Thereby, mechanical resistance as well as the wearing of the tyres is reduced.

The Reckoning of the Sliding Distance

The sliding distance can be reckoned with the following way when the rear wheels slide only (Fig. 1);

$$D = R_4 - R,\ R_4 = \frac{D_2}{\sin B},$$

$$R = \frac{D_2}{\mathrm{tg}B},\ D = \frac{D_2}{\sin B} - \frac{D_2}{\mathrm{tg}B}$$

$$D = \frac{D_2\,(1 - \cos B)}{\sin B} \quad \ldots\ldots\ldots 1$$

where;

D: The sliding distance of the rear wheels occurs when the trailer goes forward about D_2 (m),

D_2: The distance between the front and rear axle (m),

R_4: Turning radius of the rear wheel (m),

R: Turning radius of the middle wheel (m),

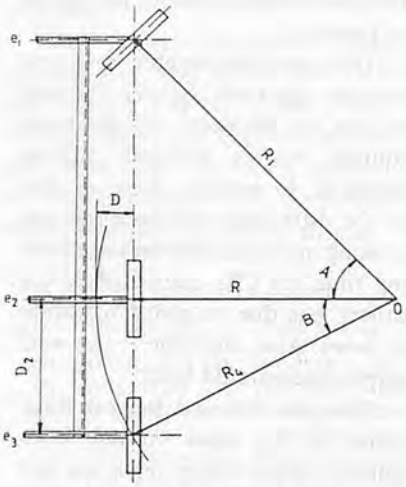

Fig. 1 Sliding motion of rear axle wheels in three-axle trailers.

B: Steering angle of the rear wheel (B depends on the steering angle A of the front wheel).

According to the equation 1, this sliding distance increases when the steering angle of the front wheel is increased. When the sliding motion occurs on the front or middle axle wheels, the sliding distances can be reckoned, too. Since the sliding motion will disapper when the wheels on the rear axle are suitably steered, it is not necessary to reckon the sliding distance of the wheels on the other axles.

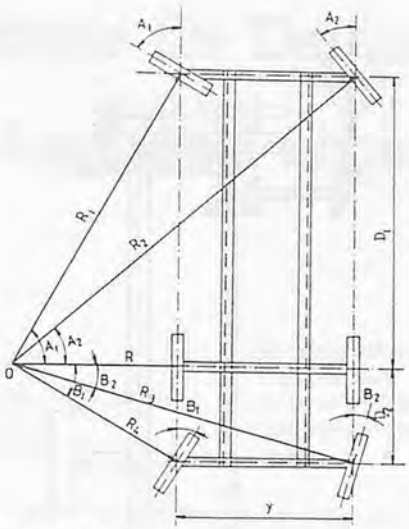

Fig. 2 Relationship of front and rear wheels steering angles.

Reckoning of Steering Angles of Wheels on Rear Axle

The steering angles of the wheels on the rear axle can be reckoned in two different ways: i) by making use of the steering angle of the front wheel and of the distances between the axles (Fig. 2); and ii) without making use of the steering angle of the wheel on the front axle directly (Fig. 3).

According to the Fig. 2;

$$R = \frac{D_1}{tgA_1} = \frac{D_2}{tgB_1},$$

$$tgB_1 = \frac{D_2}{D_1} tgA_1 \quad \ldots\ldots\ldots\ldots 2$$

In the same way;

$$tgB_2 = \frac{D_2}{D_1} tgA_2 \quad \text{is obtained.}$$

where;

A: Steering angle of the front wheel,

B: Steering angle of the rear wheel,

D_1: The distance between the front and middle axles (m),

D_2: The distance between the middle and rear axles (m).

In steering systems, steering angles of the wheels on the same axle are not equal but they are also not steered independently. The difference between the steering angles of the wheels on the same axle is known as "steering mistake" and it is ignored. Therefore, only one steering angle is studied.

In Fig. 3, on the other hand, it is considered that the trailer with three-axle draw a perfect circle, the periphery of circles of middle axle wheels will be different from each other. The different circles peripheries are:

$$L_1 = 2R,$$

$$L_2 = 2(R + y) = 2R + 2y$$

wheels' radii are equal to each other and the times of circles formation are equal, too. According to these data, the following equation can be applied.

$$L_1 = 2rn_1,\ L_2 = 2rn_2,\ 2R = 2rn_1,$$

$$2R + 2y = 2rn_2,\ rn_1 = rn_2 - y,$$

$$n_2 - n_1 = \frac{y}{r},$$

$$R = \frac{D_2}{tgB} \text{ (from Fig. 2)},$$

$$tgB = \frac{D_2}{rn_1},\ r = \frac{D_2}{n_1 tgB},$$

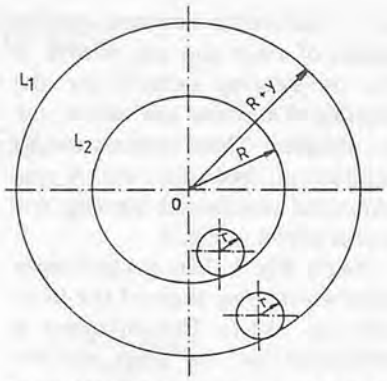

Fig. 3 Different turning circles of wheels on middle axle.

$$n_2 - n_1 = \frac{yn_1 tgB}{D_2},$$

$$tgB = \frac{D_2(n_2 - n_1)}{yn_1} \quad \ldots\ldots 3$$

where;

L_1: Periphery of the turning circle of wheel (nearer turning centre) on the middle axle (m),

L_2: Periphery of the turning circle of wheel (farther away from turning centre) on the middle axle (m),

n_1: Rotation number of the wheel (nearer turning centre) on the middle axle,

n_2: Rotation number of the wheel (farther away from turning centre) on the middle axle,

y: The length of the middle axle (m),

r: The radii of the middle axle wheels (which are equal to each other) (m).

Results and Discussion

The sliding motion on the rear axle wheels can be prevented by making use of the steering system which is able to steer, synchronizing the front and rear axle wheels. Rear axle wheels can be steered independently. But there

is a relationship between steering angles of front and rear wheels. A lot of steering systems for the steering of the rear axle wheels can be designed. These systems can be mechanical, hydraulic, etc. A synchronized mechanical steering system is shown in **Fig. 4**.

In the **Fig. 4**, there is a difference between steering angle of the front and rear wheels. This difference is influenced by the gears and depends on the ratio of (D_2/D_1) according to the equation 2.

There is a mistake in the steering system that is shown in the **Fig. 4** as the relationship between A and B is not linear. This means that the ratio between A and B changes when the steering angle is changed. In comparison, the ratio is fixed in the mechanical steering systems. In this respect, mechanical steering systems make a mistake. This steering mistake is not important in angles with little value and it can be ignored like the mistake of normal steering systems. Moreover, the mistake of steering rear axle wheels can be prevented by an electro-hydraulic steering system.

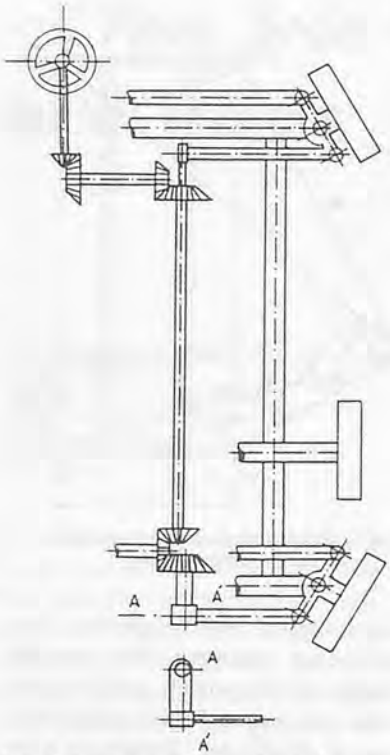

Fig. 4 A synchronized mechanical steering system between front and rear axles.

Rear axle wheels can be steered by making use of equation 4. Different rotation numbers of middle axle wheels can be transformed to an electrical datum. Thus the steering motion of rear axle wheels is started. The amount of steering motion (steering angle of rear axle wheels) can be regulated by an electrical datum of front wheel steering angle because steering angle of front wheels can be transformed to an electrical datum.

REFERENCES

1. Anonymous, 1974. Tractors. John Deere service publication, USA.
2. Erdiller, B., 1982. Tarim Arabalarí Denemeleri için Geliştirilen Elektrohidrolik Titreşim Simüla törü. Ankara Univercity press, No: 882, Ankara, Turkey.
3. Gelman, B. and M. Moskin, 1972. Farm Tractors. Translate from the Russian by Horace I. Isakson, 1975. Mir Publishers, Moscow.
4. Kadayıfçılar, S. and G. Harzadın, 1967. Traylerler. Ankara Univercity press, No: 297, Ankara, Turkey.
5. Özdemir. Y., 1981. Traktörler. Tecnical Univercity press, Istanbul, Turkey.

(Continued from page 65)

Comparative Performance of Machine Milking Methods in Turkey

3. Clough, P.A. 1978. Labour usage and performance in milking parlours. XX International Dairy Congress. Paris, 9 p.
4. Düzgüneş, O. 1975. Statistical methods. A.U.Z.F. Yayınları No: 578, Ankara, 179 p.
5. Hall, C.W. and D.C. Davis. 1979. Processing equipment for agricultural products. Second edition. AVI Publishing Co. Inc. Connecticut. 294 p.
6. Krause, V. 1980. Gruppenmelkstand-was denn sonst. Milchpraxis 18(3).
7. Mein, G.A. 1978. Recent trends in the design and performance of the milking machine. Paper Presented at XX International Dairy Congress, Paris. 14 p.
8. Price, D.R., K.W. Heathington and R.M. Peart. 1972. Computer simulation of dairy milking parlors. Trans. of the ASAE 15(2): 317-319, 323.
9. Schweigmann, P. 1962. Die Landmaschinen und Ihre Instandhaltung Fabbuchverlag. Dr. Pfanneberg Co., Giessen. W. GERMANY 909 p.
10. Sokal, R.N. and F.J. Rohlf. 1969. Biometry the principles and practice of statistics in biological research. Freeman and Co. San Francisco 766 p.
11. TSE. 1978. Record methods of cow milk. TS 3003. Ankara.
12. Weber, W. 1978. Technik und bau in der Tiehaltung. Der Tierzüchter. (5): 217-219.
13. Yağcıoğlu, A.K. 1976. The effects of vacuum pressure, pulsation rate, pulsation ratio and cluster in milking performance in milking machines. E.Ü.Z.F. izmir. 13(1): 49-64.

Vegetable Oil Derivatives: Fuel for Diesel Engines

by
A.R. Tahir
Asst. Prof.
Dept. of Farm Machinery and Power
Univ. of Agriculture
Faisalabad, Pakistan

M. Zafar Khan
Ph.D. Student
Dept. of Chemistry
University of Manitoba
Canada

H.M. Lapp
Professor
Dept. of Agric. Engg.
University of Manitoba
Canada

Abstract

Several vegetable oils have been investigated so far in different parts of the world to determine their suitability as fuel in diesel engines. Those efforts have shown that except for a few, all the vegetable oils can be used as fuel with some reservations. The most detrimental properties of oils are high viscosity, low volatility, poor atomization and auto-oxidation. Methyl and ethyl esters from vegetable oils with alcohol can result in fuel material with properties fairly similar to No. 2 diesel. Engine performance tests with esters of sunflower oil have indicated less exhaust emission and satisfactory thermal efficiency and power development.

Introduction

The spiralling costs of petroleum and question about its availability at all times have compelled many countries to seek alternative fuels that can take the place of diesel oil for crop production and farm operations. Some of the investigations recently undertaken have shown reasonable viability in the use of vegetable oils as an extender or substitute for diesel fuel. Besides some favourable experience, a few problems such as high viscosities and low volatility have been encountered in the use of vegetable oils as straight fuel. With the objective of mitigating some of the problems associated with high viscosity, poor flowability and coarse atomization, dilution of vegetable oils has been suggested by a number of researchers. Transesterification, a chemical process to prepare small chain esters from vegetable oils, has been considered useful in accomplishing the aforementioned objectives. Particular attention would be devoted to the derivation of methyl esters from the triglycerides of sunflower oil. The objective of this study was to explore the possibility of transesterification of sunflower oil into simple esters and then to check the fuel-related properties of the new fuel so obtained.

Chemistry of Vegetable Oils

Animal fats, fish oils, vegetable and other seed oil have one thing in common – they are usually fatty esters of glycerols (triglycerides) with a structural notation of:

$$\begin{array}{l} CH_2 - O - \overset{O}{\overset{\|}{C}} - R_1 \\ \overset{|}{CH} - O - \overset{O}{\overset{\|}{C}} - R_2 \\ \overset{|}{CH_2} - O - \overset{O}{\overset{\|}{C}} - R_3 \end{array}$$

where R_1, R_2 and R_3 represent the hydrocarbon chain of fatty acids, R_1, R_2, and R_3 may be the same, depending upon the oil, but usually are different in chain length and in the number of double bonds (Pryde, 1981). The most common fatty acids, encountered in sunflower oil and their composition as determined by gas chromatography at the University of Manitoba, Canada are presented in **Table 1**.

Except crambe and some varieties of rape seed oil, all other vegetable oils possess maximum 18 carbon atoms with 2-3 double bonds. The composition of fatty acids is crucial as it affects very much the fuel-related properties of a vegetable oil.

The carlorific value (heat of combustion) of vegetable oil depends largely on the carbon content and the degree of unsaturation (Pryde, 1981). Oils owe their relatively high viscosities to the intermolecular attraction of the long chains of their glyceride molecules (Formo et al, 1979).

Table 1 Fatty Acids Analysis of Sunflower Oil by Gas Chromatography

Fatty acid	Carbon-atom	No. of double bonds	Percentage
Palmitic	16	–	6.0
Stearic	18	–	4.0
Oleic	18	1	18.5
Linoleic	18	2	71.0
Behenic	22	–	0.6

Hence, in order to reduce the viscosity, molecular weight should be small, temperature and unsaturation be high. Unfortunately, the effect of increasing unsaturation is to increase the auto-oxidation. The composition of fatty acids shown in **Table 1** is sensitive to environmental factors. Especially, the percentage of oleic and linoleic interchange due to climate, temperature, genetic factors and the location of seed in the flower head.

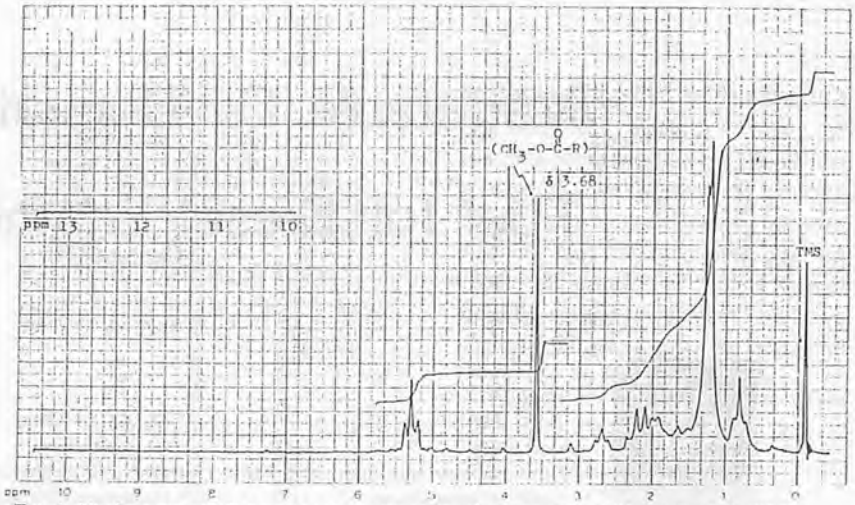

Fig. 1 Nuclear magnetic resonance spectra of hydrogen proton (H-nmr) of distilled methyl ester of sunflower oil.

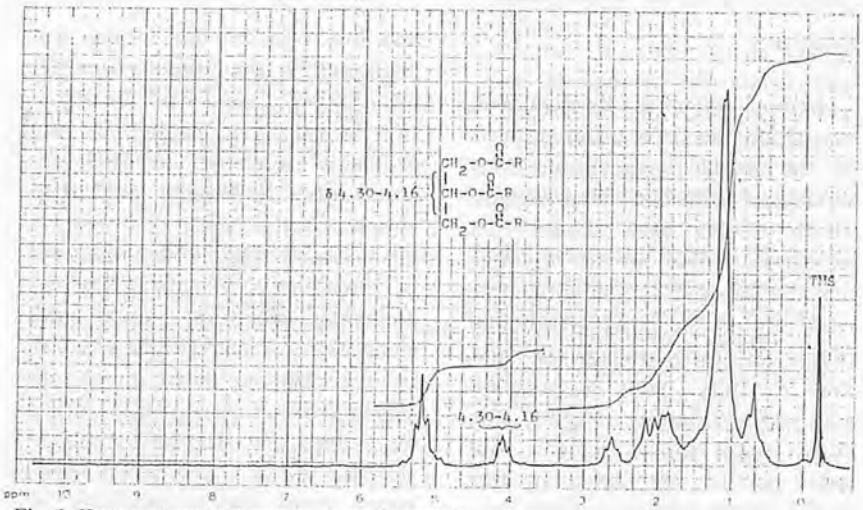

Fig. 2 H-nmr of crude-degummed sunflower oil.

Methodology

The esters of vegetable oils can be prepared by a number of techniques. For the present study, transesterification of sunflower oil was undertaken in the Department of Chemistry, University of Manitoba, Canada. Sodium methaoxide (1.2 mole) solution was prepared by dissolving sodium metal (33 g and slightly in excess of 1.363 mole) in methanol (1100 ml, excess) at room temperature. Sunflower oil (400 g, 0.456 mole) was then added and the resulting solution was stirred and heated under reflux over steam bath for 45 min. The reaction equation can be written as: Sunflower oil+ Sodium methaoxide = Methylester

$$\begin{array}{l} CH_2 - O - CO - R_1 \\ | \\ CH - O - CO - R_2 + \\ Na\ OCH_3 + Heat = 3CH_3 \\ -O-CO-R + Bi\text{-}product \\ | \\ CH_2 - O - CO - R_3 \end{array}$$

The reaction was monitored by a nuclear magnetic resonance spectra of hydrogen proton (H-nmr) of small sample removed from the reaction mixture. After completion of the reaction, excess methanol (900 ml) was removed on a vacuum rotary evaporator. The concentrated reaction mixture was poured into 100 ml of water stirred and extracted with ether (3×150 m*l*). The ethereal solution was concentrated by evaporation and the residue dissolved in benzen (about 150 m*l*). After drying over sodium sulphate overnight the organic solvent was removed under vacuum. Nuclear magnetic resonance spectra of hydrogen proton(H-nmr) for the crude oil and methyl ester were obtained with a "Varian" EMO360 NMR spectrometer and are shown in **Figs. 1** and **2**. The chemical shifts are given in Delta(δ) units relative to tetramethylsilane (TMS) as an internal standard. Deutorochloroform ($CDCl_3$) was the solvent used. The fuel-related properties of the methyl ester were determined by using an ASTM test procedures prescribed for No. 2 diesel.

Results and Discussion

Heat of Combustion

The heat of combustion or calorific value of a fuel is an important measure since it is the heat produced by the fuel within the engine cylinder that enables the engine to do work. The calorific value may be reported as gross or net depending upon the method and conditions of the test. The heat of combustion of No. 2 diesel fuel, methyl ester and sunflower oil were determined by using an oxygen bomb calorimeter. The average results so obtained are presented by the histograms in **Fig. 3**. The methyl ester of sunflower oil, with gross calorific values of 40 MJ/kg on

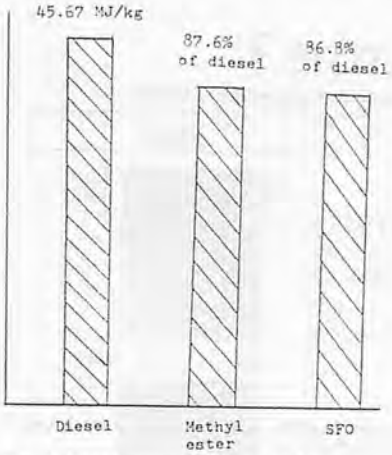

Fig. 3 Gross calorific values of No.2 diesel, methyl ester and sunflower oil.

mass and 35.17 MJ/L on volume basis, have 12.4% and 9.3%, respectively, less heat content than No. 2 diesel fuel.

The lower heat content in the case of methyl ester would result in higher specific fuel consumption in an engine. The difference in specific fuel consumption, however, does not totally depend on the difference in heat values but also on the efficiency of the engine converting the fuel energy into work.

API Gravity and Density

The gravity of a fuel is usually expressed in degrees API, a scale devised by the American Petroleum Institute. The boiling temperature, the volatility, and the heat value are somewhat related to the API gravity so it is used as a means of estimating these values (Liljedahl et al, 1979). The density of methyl ester was determined by a gravimetric method which was converted to API gravity by using the relationship:

API gravity, degrees =

$$\frac{141.5}{\text{Sp.gr. } (15.56/15.56\ C^{\circ})} - 131.5$$

Both the API gravity of No. 2 diesel fuel and sunflower oil were determined by hydrometer method. The API gravity was then converted into density (kg/*l*) by the relationship referred to above. With respect to density, methyl ester (0.873 kg/*l*) and vegetable oil (0.924 kg/*l*) are heavier approximately by 3.5% and 9% than No. 2 diesel fuel. The higher density of methyl ester will mean increased costs of handling and transportation.

Cloud and Pour Points

The cloud and pour points of a fuel are of great importance to engines operating in cold climates. The cloud point indicates the start of fuel line and filter plugging because of wax formation while the pour point indicates the cessation of fuel flow. The temperature at which cloud and pour points were observed are shown in **Table 2**.

Table 2 Cloud and Pour Points of Methyl Ester, Sunflower Oil and No. 2 Diesel

Fuel type	Cloud point °C	Pour point °C
Methyl ester	-2.6	-4.0
No. 2 diesel	-9.0	-18.5
Sunflower oil	-7.8	-15.0

The cloud and pour points (−2.8 and −4.0 °C) of methyl ester vary to a greater degree when compared with diesel fuel (−9.0 and −18.5 °C). The higher cloud and pour points indicate that the methyl esters of vegetable oil do not favour their use in engines operating in cold climates.

Distillation

In the distillation of fuels, the initial boiling point is that thermometer reading which is observed at the instant of first drop of condensate received from the lower end of condenser tube. The distillation curve is an important property to determine the operating characteristics of a fuel. Practically, it is an indirect measure of the temperature that will require to give vaporization of the fuel in

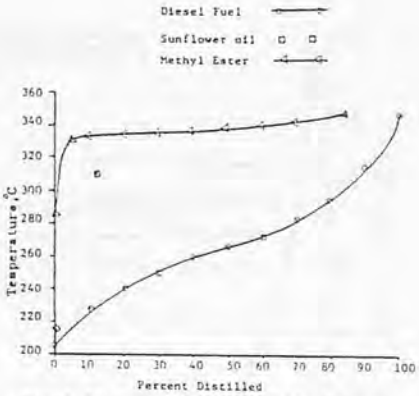

Fig. 4 Distillation curves of No.2 diesel fuel, crude-degummed sunflower oil and its methyl ester.

manifold and cylinders of the engine.

The 10% point (temperature) of the curve is associated with engine starting, the 50% point indicate the engine warmup and the 90% point is related to engine acceleration. (Crankcase dilution and fuel economy Liljedahl et al, 1979). The distillation curves of the methyl ester and No. 2 diesel fuel are shown in **Fig. 4** which shows that the initial boiling point and 10% point which is required to start an engine, are higher for methyl ester than No. 2 diesel fuel. This characteristic indicates that cold starting will be a serious problem in using methyl ester as an alternate fuel.

Kinematic Viscosity

The viscosity of a liquid is a measure of the internal friction of the liquid in motion. The viscosity of a fuel plays an important role in the performance of an engine fuel system operating through a wide temperature range. The kinematic viscosity of the methyl ester of sunflower oil was determined over a temperature range of 1.0 to 70°C (34 to 150°F). A summary of the viscosity results at selected temperatures is shown in **Fig. 5**. At 37.78°C (100°F), the specified temperature for an ASTN viscosity test for diesel fuel, methyl ester with 5.2 mm^2/s

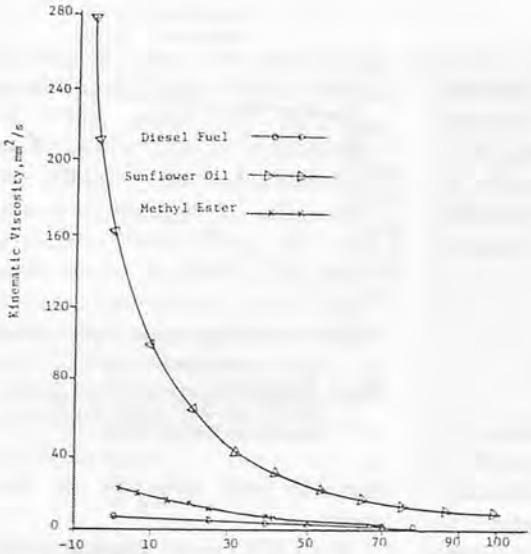

Fig. 5 Kinematic viscosity of No.2 diesel fuel, crude-degummed sunflower oil and its methyl ester.

Table 3 Engine Performance with Sunflower Oil Esters

Test	Engine	
	Perkins 4320	Ford 6600
Max. power, kW	−3.5	−4.5
Brake thermal efficiency, %		
at max. power	+1.4	+3.2
at max. 35 kW	+2.5	+1.7
Hatridge smoke value		
at max. power	−34	−48
at max. 35 kW	+1	−21

Note: Difference in table above is after comparing with disesl fuel.

(viscosity) as about twice that of diesel fuel. Throughout the temperature range of 1.0°C to 70°C the viscosity of methyl ester is not more than three times the viscosity of No. 2 diesel fuel. This indicates that in cold temperatures the use of methyl ester as a fuel is promising.

Auto-oxidation

Oxidation increases the viscosity and deteriorates the flavor of vegetable oil with the passages of time. Fixation of atmospheric oxygen by the vegetable oil is due to polyunsaturation condition. As the methyl ester is quite saturated so it can be anticipated to have less susceptability to oxidation.

Engine Performance with Sunflower Oil Esters

Engine performance tests with esters of sunflower oil fuel were conducted by Bruwer et al (1981) in South Africa. Preliminary tests with esters show that, after 100 h of operation at 80% of maximum power, the ester-based fuel caused less coking than diesel, produced much less exhaust smoke, and increased engine efficiency to a level higher than that of diesel fuel (Table 3). Bruwer has shown that sunflower oil esters have more promise than the sunflower oil as diesel fuel by reason of lower viscosity and higher volatility.

Conclusions

The problems of high viscosity in the use of vegetable oils as fuel can be solved by transesterification to methyl or ethyl ester. The viscosity of methyl ester of sunflower oil is fairly close to No. 2 diesel fuel up to 70°C. However, its use below −5.°C is restricted as it ceases to flow below this temperature. It is satisfactory in tropical climates provided its economy of utilization can be justified.

The volatility of methyl ester of sunflower oil, grown in cold climates, is poor. The 10% point on the distillation curve which is required to start an engine is quite high and the esters may not start a cold engine easily.

Auto-oxidation of vegetable oil is also a limiting factor in their storage and utilization. Greater oxidation stability seems more desirable as less double bonds are present in the ester.

Thermal efficiency and power development are quite satisfactory with the use of esters of sunflower oil. Less exhaust smoke and less engine coking favour very strongly the use of esters in diesel engines.

REFERENCES

Annual Book of ASTM Standards. 1980. Petroleum products and lubricants. Part 23. Amr. Soc. Testing and Materials.

Bruwer, J.J., B.V.D. Boshoff, F.J.C. Hugo, L.M.D. Plessis, J. Fulls, C. Hawkins, A.N.V. Watt. and A. Englbrecht. 1980. Sunflower seed oil as an extender for diesel fuel in agricultural tractors. Div. of Agri. Engg. Dept: of Agri. and Fisheries, Private Bag x 515, Silverstone, South Africa, 7pp.

Formo, M.W., E. Jungerman, F.A. NORRIS, and N.O.V. Sanntage, 1979. Bailey's industrial oil and fat products. Vol. 1 (4th Ed.), John Wiley and Sons, N.Y., Toronto, p177-227.

Liljedahl, J.B., W.M. Carleton, P.K. Turnquist and D.K. Smith, 1979. Tractors and their power units. 3rd Ed. John Wiley and Sons inc. N.Y. p60-75.

Pryde, E.H. 1981. Vegetable oil vs diesel fuel. Proceedings of regional workships on alcohol and vegetable oil as alternative fuels. Purdue University, West Lafayette, IN., U.S.A. p287-295.

Farm Accidents in Pakistan

by
Azhar Iqbal Mufti
Agric. Engineer
Farm Machinery Institute
N.A.R.C.
Islamabad, Pakistan

S. Iqbal Ahmad
Director
Farm Machinery Institute
N.A.R.C.
Islamabad, Pakistan

Abdul Majid
Agronomist
Farm Machinery Institute
N.A.R.C.
Islamabad, Pakistan

Abstracts

The study was conducted with the aim and objective of knowing the nature and severity of farm accidents which could lead to improved safety measures and standards for farm machines and implements.

Seven factors (size of holding, land fragmentation, operator uniform, qualification, license, experience of the operator and environmental situation) were assumed to be dependent on accidents. Statistical analysis was carried out. Three factors (size of holding, land fragmentation and operator license) were found to be significant while others were non-significant.

Farm accident information indicates they have resulted in 5% death, 11% permanent injuries and 84% temporary injuries. Prominent machines involved in accidents were sprayers, tractors, threshers, tubewells and fodder chopper. Their respective shares in the accidents were 34%, 31%, 16%, 7%, and 6%.

Introduction

The total land area of Pakistan is estimated at 80 million ha of which 20 million is cultivated. The total number of farms is 4.07 million of which 75% is less than 5 ha. Approximately 23 to 13 million people (53%) are employed in agriculture. More than 8 million are farm tenants or farm workers.

The farm tractor is one of the basic source of mechanical power performing agricultural operations. Tractor population is estimated at 225 000 units. Increased use of inputs and machinery bring about higher production but also higher numbers of accidents when safety is not observed.

In man-machine system, accidents do happen. The investigation of the causes and prevention of accidents has become a special field of engineering i.e., safety engineering.

Machines used on farms in Pakistan result in accidents. No data base exists in the country on farm accidents. The present study is the first attempt at providing bench mark data base for further work.

Accident information in selected countries shows that:

i) the National Safety Council, U.S.A. (1975) reported 2 100 accidental work deaths in agriculture, of which 1 500 involved farm residents; ii) U.K. 331 fatal accidents were reported from 1968 to 1970, 160 of which involved tractors; iii) in India there were many severe farm accident cases registered with the New Delhi Hospital in 1981, leaving the operator handicapped: and iv) in Malaysia (1982), it was found that workers handling chemical (spray) suffered from some health problems.

Objectives of the Study

The overall objective of the study was to quantify the nature and severity of accidents which could lead to improved safety measures and standards for farm machines and implements.

More specifically, the study aims to:

1. Determine and evaluate the extent and causes of farm accidents.
2. Assess the technical knowledge regarding safe operations of farm machines amongst the users.
3. Help prevent and minimize injury and loss of lives and material by suitable measures.
4. Ascertain the needs of safety standards.
5. Make policy recommendations for safety.

The accidents in the study are assumed to be dependent upon seven variables: i) size of land holding; ii) land fragmentation; iii) operator uniform; iv) qualification; v) license; vi) experience of operator; and vii) environmental

situation.

An accident would be included in the survey if it resulted in an injury, requiring professional medical care or loss of one-half day or more from normal activities.

Majority of the farmers were reluctant to give complete information since they felt it could be used against them. They did not maintain any farm record from which they could furnish the required information.

A little hazard or accident was not a serious thing to remember for a long time. There was only death or major accident they remembered.

The farmers believed that hazards are acts of God; that nobody can stop it and that there was no need to adopt any safety measures.

Results and Discussions

The survey was conducted in Multan *thesile* of Punjab Province. The area was selected due to the pressence of a high density of tractors and allied machinery. There were 2 969 tractors in operation at the time of the study. A total of 8 122 implements and machines were in use by these tractors. A random sample of 4% was taken from the total population of tractors. A total of 113 farmers were interviewed at their premises. From this sample, 65 reported 104 different kinds of accidents while 48 farmers did not report any accident. The information was collected for three years (1982-1984). The χ^2 was used to test the hypotheses. Three factors were found to be significant on accident. The majority (69%) of the accidents were reported in 1984. During 1982 and 1983, 18.5 and 12.5% accidents, respectively, were reported with farmers reporting a minimum of 1 and maximum of 4 accidents. These accident resulted in 5% death; 11% permanent injuries; and 84% temporary injuries.

Injuries by Age and Severity

The majority of accidents (47% of total) were found among the younger age group (19 to 28 years). Four percent each resulted in death and permanent injuries for occuring in the 29- to 47-year age group. The yonger age group (<18 years) and the older age group (48 and above) contributed 10 and 12%, respectively, to the total number of cases reported.

Size of Holding and Severity of Injuries

The number of accidents increased directly with the size of farm holding. The majority (54%) of the accidents occured in 20 ha in size or more (**Table 1**).

The land fragmentation and occurence of accidents were found to be interdependent with each other.

The survey reveals that farmers with lower literacy rate were more prone to accidents compared with the more literate ones: 60% of the total accidents occured among th less literate farmers. Therefore, it can be said that as the level of education increases the percentage of accident incidents decreases.

Relation of Driving License with Injuries

Tractor operators in Pakistan are required by law to have driving permits/license. Farm machines, other than tractors, such as threshers and tube wells do not require any license. The survey result indicates that there was a strong correlation between accident incidents and driving licenses namely; operators without license experienced more accidents compared to those with licenses. (**Table 2**).

Majority (55%) of the tractor drivers have 5 or more years experience. There was no correlation between experience and accidents. On the other hand, male drivers of tractors accounted for 96.5% of the total number of accidents and injuries. The balance was accounted for the female drivers.

Some 83% of injuries happened to farm workers while 17% involved non-farm workers. It was also observed that more severe types of injuries were sustained by non-farm workers.

The majority of the victims (78%) of accidents/injuries were wearing loose clothing at the time

Table 1 Injuries by Size of Holding

Size of holdings	All injuries	Severity of injuries		
		Temporary	Permanent	Death
< 5 ha	12%	10%	2%	–
5 < 10 ha	14%	12%	2%	
10 < 20 ha	20%	16%	3%	1%
20 and above	54%	46%	4%	4%
All holdings	100%	84%	11%	5%

Table 2 Relationship Between Driving Licenses and Injuries

Driving licence	All injuries	Severity of injuries		
		Temporary	Permanent	Deaths
Licence holders	11%	6%	2%	3%
Non-holders of license	44%	37%	6%	1%
Other	45%	41%	3%	1%
All types	100%	84%	11%	5%

of accident. Loose clothing entanglement with moving machine parts was the major cause of accidents.

Machines Involved in Accidents

Sprayers, tractors, thresher, tubewells and fodder chopper figured prominently in 104 accidents with respective shares of 34%, 31%, 16%, 6.5%, and 6.5%. For sprayers, approximately all of the accidents were due to physical contact with chemicals. Farmers did not use protective gears while using chemicals. The majority of the farmers were not aware about masks and gloves that should protect them from chemicals. Chemical dealers did not provide safety devices in the sale of chemicals. Tractors involved in accidents were of the medium size (25 to 45 kW). Overturning of the tractors and being overrun by them were the main causes of accidents.

The majority of the threshers involved in accidents were driven by tractor and electric motors. Belt, entanglement, electric shock, and feeding the crop to the thresher without safety measures were the main causes of accidents. Most of the tubewell accidents were due to belt entanglement and electric shocks.

Approximately 61% of the farm machines that figured in accident were 1 to 4 years old. Seventeen percent of the machine were in use for 4-8 years (Table 3).

Table 4 shows the nature of accidents and their distribution against machines involved in accidents.

Operator carelessness contributed 71% of the total accidents while mechanical failures represented 17%. The rest were dye to environmental conditions. It was observed that 58% of the farm machineries were lacking in human safety devices. It was reported that 78% accident occured on days when the weather was clear.

Table 3 Distribution of Injuries, by Machines/Implements

Name of machine	All injuries	Severity of injuries		
		Temporary	Permanent	Deaths
All machines	100%	84%	11%	5%
Sprayers	34%	31%	3%	–
Tractors	31%	26%	2%	3%
Threshers	16%	14%	2%	–
Tube wells	7%	4%	1%	2%
Fodder chopper	6%	4%	2%	–
Drill	2%	2%	–	–
Others	4%	3%	1%	

Table 4 Nature of Accidents and Percent Distribution

Machines	Nature of accident	% Share
Tractor	Overturns	5
	Overrun	2
	Hydraulic faliure	1
	Others	23
Sprayer	Inhaling of chemicals	32
	Physical contact withchemicals	2
Threshers	Feeding	3.5
	Belt entanglement	2.5
	Beater hammer breakage	2
	Fire	2
	Electric shock	1
	Others	5
Tubewells	Electric Shock	3.5
	Cloth entanglement	2
	Others	1
Tractor trolley	Overturn	2
Drill planter	Commissioning of feeder	2

Conclusions and Recommendations

The majority of the farmers were superstitious in their belief that accidents cannot be avoided even with the use of safety measures.

Operators/drivers must have valid licenses and for this purposes, or simplified procedure of licensing for drivers should be formulated.

Human safety devices should be incorporated in the design of agricultural machinery and implements. All rotating parts of machines should be guarded. Sharp corner, burrs and protruding parts should be removed.

No farm machinery or implements should be allowed to be sold in the market until it meets safety requirements.

Adequate warning signs should be printed/displayed by the manufacturers on the machinery.

Safety training programme should be instituted.

Tractor cabins and tractor safety frames should be standard items on the tractor.

REFERENCES

Brune, J.W. and W.J. Fletcher (1982) Farm Accident Survey. Report. National Safety Council, USA.

Knapp, L.W. and J.T. Parks, Jr. (1970), Small Tractors Operator Position and Safety Behaviour. Agricultural Engineering, USA.

ISI, (1983). General and Safety Requirements for Power Threshers in India.

Makoto, (1983). Farm Machinery Safety. Agricultural Engineering, USA.

Barnes, W.S. and H.D. Henderson (1984), Tractor Operation Training Safety Seat. AMA, Japan, 15 (3).

In-service Training for Agricultural Extension Staff in Pakistan

by
Abdul Razzaq
Sr. Subject Matter Specialist
(Engineering)
Adaptive Research Farm
Sheikhupura, Pakistan

Abstract

This paper describes the need for training, agricultural extension organizational set up, types of training and analytical examination of available in-service training arrangements of agricultural extension staff in Pakistan. None of the in-service training practices in vogue is perfect. A proposal has been given for establishing training centres, at least one in each province, for inservice training in order to create a real type of agricultural extension staff.

Introduction

Pakistan is predoninantly an agricultural country. Agriculture accounts for 31% of GDP, employs 50% of the total labour force and supports directly and indirectly 70% of the population for their sustenance. It contributes 80% of the foreign exchange earnings through export of primary agricultural and processed commodities. It provides raw materials for major industries like cotton textiles, sugar as well several medium and small scale enterprises.

The total geographical area of the country is 79.61 million ha of which the cropped area is 19.30 million ha. The country has large areas of deep soil, favourable topography, suitable climatic condition and water wealth. The Indus Basin is one of the world's greatest natural resources capable of producing about 100 million t of food grains annually. At present, it produces only about 25% of its production potential. The average yield of major crops is at present far below their production potential. There is a wide gap in yield per hectare of major agricultural commodities obtained on the experimental plots and by progressive farmers applying a complete package of improved technology in major crops and the average farmers using outmoded farming methods. These facts indicate that the application and availability of the latest technology with the common farmers is lacking which demand intensive agricultural extension activities.

Extension is transmission of knowledge of the advances in science and techniques with a view to bridging the gap between research, on the one hand, and new practices of producers, on the other. Its aim is to ensure the best use of land, water and other resources. Some of the ingredients of extension are:

1) Education for the village people;
2) Changing of attitude;
3) Knowledge and skill;
4) Working with all strata of people for ascertaining their needs and problems;
5) Helping people to help themselves;
6) Learning by doing and seeing is believing;
7) Teaching people what to want as well as how to work out ways of satisfying these wants and fulfilling their desires;
8) Development of individuals in their day-to-day living;
9) Development of their leaders, their society and their world as a whole, and
10) Working together for the welfare and happiness of the people.

Agricultural Extension Staff Setup

Organizationally, a Field Assistant is the front-line worker in the transfer of technology to farming community. Above him are Agricultural Officers, Assistant Directors (EADA), Deputy Directors and Directors. The Agricultural Officers and the Field Assistants are hired after qualifying from the respective educational institutions. The posts of Assistant Directors and Deputy Directors are filled in partly by promotion and partly by

direct recruitment. The positions above the Deputy Director are more of executive in nature.

Types of Training

The components of a successful staff development programme include pre-service training, induction training, in-service training and continuing education.

Pre-service training – Education obtained by the staff before coming in service is termed as pre-service training. For Field Assistants, pre-service training is covered in two years of diploma course in agricultural training institutes established by the provincial agricultural departments. The prerequisite for the entry in these institutes is matriculation. A degree in agriculture sciences from the agricultural universities/colleges is a prerequisite for the post of Agricultural Officers and higher.

Induction training – Induction training takes place at the time of hiring of an extension worker in the organization. This training is also called orientation programme. The purpose of the induction training is to orient new employees with the practices and procedures of the organization.

In-service training – In-service training may be described as any "planned programme of learning opportunities afforded staff members for purposes of improving the performance of the individual in already assigned positions". In-service education is also described as a planned programme of "systematic practice in the performance of a skill".

Continuing education and career development – Successful extension workers at all levels will find that satisfaction with the work itself is enhanced if they take the time to design and develop a plan for their own continuing education and professional development. Continuing education is a process by which men and women are engaged in learning opportunities for the purposes of becoming more professional. This tends to be a life-long process.

Available-in-Service Training

In general, in-service training is a programme designed to strengthen competences of extension workers while they are on the job. Therefore, it is always a problem-centred, learner-oriented and time-defined services of activities. The in-service training facilities available are briefly reviewed.

Fortnightly training under T and V system – Training and visit system (T and V) backed by adaptive research is being implemented in few selected districts in Pakistan. The unique feature about the T & V approach is the close integration of training and extension work. Fortnightly training sessions are the chief means of continuously upgrading the professional and technical skills of Field Assistants and Agricultural Officers. The field staff have the opportunity to actually use the new skills and knowledge by teaching them to farmers during the following fortnight. This close integration of training and extension work gives each extension worker a high motivation to learn during one day training sessions and reinforces the application of these new skills and knowledge through repeated presentations and explanations to their eight groups of contact farmers during the next series of fortnightly visits.

The fortnightly training sessions have two main objectives. The first is to present the specific recommended practices (called impact points) that are to be disseminated during the following two weeks. The second objective is to report problems and other questions to the Subject Matter Specialists (SMSs) that could not be solved or answered during the previous fortnightly visits. When SMSs do not have an appropriate solution to a problem, they, in turn, raise these problems with the Senior Subject Matter Specialists (SSSMSs) of adaptive research for guidance. This feed back from farmers to Field Assistants, to Agricultural Officers to Subject Matter Specialists and then to Senior Subject Matter Specialists is precisely what must be established if both research and extension are to be responsive to farmer's needs and problems. Therefore, the fortnightly training sessions not only improve the technical and professional skills of Field Assistants and Agricultural Officers but, equally important, they form the link for the essential feedback system between farmers demanding new or additional information and research personnel, communicated through extension.

The T and V system has been quite successful in imparting training regarding technical development to Field Assistants and Agricultural Officers. However, the programme is run on limited scale in few selected districts. Also, it is more confined upto Field Assistants and Agricultural Officers level.

Refresher courses – Refresher courses are subject matter-oriented which are arranged for skill development. These one-day courses are mainly carried out twice a year near the on-set of crop seasons. Specialists/researchers are called to deliver lectures on the technology of the relevant crops. The refresher courses are attended by the entire district staff. Field Assistants, gain knowledge from the speakers.

Through the refresher courses, in-service training is imparted to the

entire field staff at the district level. Mainly, the refresher course is arranged for one day continuously and many specialists/researchers deliver their lectures. Moreover, the courses relate to technologies for the coming crops. These rarely touch the socio-economic aspect of farming community.

Short courses – Subject matter-oriented short courses are sometimes arranged by research institutes to introduce new trends to extension workers. This arrangement upgrades the technical knowledge of the extension workers in the subject. These courses are infrequently arranged and mainly attended by Agricultural Officers and Higher Officers. These courses are also of technical in nature and least concerned with socio-economic conditions of farmers.

Conferences – Conferences are sometimes arranged on particular problems. These are generally attended by all extension workers.

Symposiums – Farmers days are arranged at local levels which also provide an opportunity to gain knowledge on the part of the extension workers about the prevailing technology through discussion with farmers and among themselves. This arrangement is attended by Field Assistants and other local officers. The mutual discussion helps a lot to refresh the knowledge. However, this programme is of more feedback-oriented type and mainly confined to the dissemination of technology to participating farmers.

Conclusion

All the in-service training arrangements presently available for agricultural extension staff in Pakistan are far from perfect. These have merits and demerits as well. All these arrangements relate to developing technical knowledge of extension workers. Amongst all, T and V system is more promising but this is also mainly concerned with impart training for Field Assistant and Agricultural Officers on technical aspect only. Also, this system is limited to a few selected districts in Pakistan.

Proposal to Up-grade In-service Training

As regards the dissemination of technical knowledge to agricultural extension staff the present in-service training arrangement in practice should continue and be strengthened. However, in order to materialize the creation of a real type of agricultural extension staff relying on socio-economic pattern, training centres, one in each province, should be established. These centres should be run synonymous to NIPA, Administrative Staff college, Punjab Engineering Academy, etc. Each centre should have well-trained staff, latest training equipments and complete updated information centre. The centre should be able to give in-service training to agricultural extension staff on latest technology, management, accounting, socio-economic aspect of rural society, etc. ■■

International Symposium on Agricultural Engineering (89-ISAE) and International Exhibition on Intensive Animal Farming and Crop Cultivation Technology

September 12-16, 1989
Beijing, China

Topics at the symposium are:

Land Reclamation and Utilization: engineering measures to improve soil and to transform low productivity farm land comprehensively, water and soil conservation, irrigation and drainage;

Agricultural Mechanization: strategy, technical measures, agricultural mechanization in developing countries, marketing of farm machineries and its prediction;

Farm Building and Biological Environmental Engineering: animal, poultry housing and other buildings for agricultural production, horticultural and breeding engineering, storage and preservation technique for fruits and vegetables, and agricultural waste engineering;

Development and Utilization of New Energy Resourses in Rural Areas and Energy Saving Technique, Economics and System Analysis of Agricultural Energy Resourses;

Processing Technique and Equipment of Farm Products, New Technology of Food Engineering;

Applied Electronic Technique and Automation: development of instrumentation and control units for farm use, application of microprocessor and computer used in agriculture, remote sensing technique, tendency towards the development of sophisticated agricultural information technique;

Agricultural System Engineering;

Effect of Science and Technology, Education, Extension of Agricultural Engineering on Social Development.

Purposes of the exhibition are to develop scientific and technical exchanges on agricultural engineering between China and other countries of the world; to open up international markets of new technique and products of intensive farming; and to introduce new and appropriate technique from abroad. The Exhibition involves greenhouse facilities and necessary equipment, protected cultivation and management technique, small-sized farm machinery, non-soil cultivation technique and relevant equipment, plastic products used in agriculture, animal and poultry-breeding installation, preliminary processing technique and equipment of farm products.

For information contact the Secretary, Dr. Zhu Yonghua, 89-ISAE, P. O. Box 1, Beijing Agricultural Engineering University, Beijing, 100083, China.

Technological Information on Products and Manufacturing Processes for Small-scale Entrepreneurs

Entrepreneurs in developing countries often lack technological information on very specific products or processes and do not know where to forward their request.

The Information Service on Technological Alternatives for Development (INSTEAD) has been established within the International Labour Organisation, a specialised agency of the United Nations, to assist them in finding the information required or to direct them to an appropriate source. Thus, information pertaining to fields such as energy, food processing, agricultural tools and equipment, building materials, handicrafts, etc. can be provided free of charge on request. This information can take the form of bibliographies, technical documents, list of equipment suppliers/manufacturers, list of technology institutions, events (fairs, seminars, workshops, etc.), list of technology institutions and their area of competence, etc.

The firms and/or individuals wishing to obtain information may direct their request directly to:

INSTEAD, International Labour Office, Technology and Employment Branch, 1211 Geneva 22, Switzerland
or through the local office of the International Labour Organisation (I.L.O.) or the United Nations Development Programm.

Tractor Production in India Touching New Heights

Year 1988 has proven to be a very good year for TRACTOR INDUSTRY in India. First six months production has already touched new heights and the total annual production is likely to cross 100 000 mark by 31st December, 1988. Never before in the history of Indian Tractor Industry the pro-

Tractor Sales in India

Make	Jan.-June 1988	Jan.-June 1987	Projection July-Dec. 1988
Escorts	7 287	5 976	7 894
Ford	4 635	3 601	5 022
TAFE	6 850	5 374	7 422
Mahindra	8 919	8 845	9 663
HMT	7 453	7 755	8 075
Eicher	8 074	7 024	8 746
Swaraj	5 916	2 578	6 409
Hindustan	824	364	893
Total	50 036	41 887	54 124

by K.S. Malhotra, Escorts Research Centre, Faridabad, India

duction could cross even 90 000 mark.

The table clearly shows that net sales during 1st half of 1988 was 50 036 which is 39% more than that of 1987 mark during same period. On analysing last 10 years data we find that tractor production ratio of first six months and last six months is 48:52. Thus, the projections reveal that the total production is likely to touch 104 160.

CIGR Inter-sections Symposium
September 5-10, 1988
Ilorin, Nigeria

The international Commission of Agricultural Engineering (CIGR), in collaboration with the Nigerian Society of Agricultural Engineers (NSAE) organised the Symposium at the National Centre for Agricultural Mechanization (NCAM), Ilorin, Nigeria. The main Theme of the symposium was Rural Technology for Agricultural Growth in Developing Countries.

The sub-themes were: i) Production machinery, processing machinery and storage systems for small farmers. ii) Technology for small scale irrigation, and iii) Livestock and domestic water supply for rural communities.

The symposium was attended by 107 delegates including individuals and companies. These included 16 Foreign delegates, 89 Nigerians and 2 Agro-based Companies.

In all total of fifty technical papers and lectures relating to various aspects of Agricultural Engineering were presented at the Symposium.

A communique was issued at the end of this symposium.

This article was written by Prof. S.R. Verma, Commonwealth Chief Adviser to the NCAM, Ilorin, Nigeria.

SIMA 89 – 60th International Farm Machinery Show
March 5-12, 1989
Paris Porte de Versailles, France

At the heart of the world's largest market – The International Farm Machinery Show is staged at the very heart of the European agricultural market, the world's largest when it comes to numbers of farms and types of farming.

A truly major Trade Exhibition – Nearly one million visitors attend the SIMA each year, including more than 650,000 professionals. At SIMA, know-how is all around you: in the aisles and on the booths.

With more than 1 000 exhibitors – Market size and diversity, plus the numbers and quality of visitors are all factors that attract regularly more than a thousand exhibitors from around the world (1 100 in '87). They make SIMA the world's biggest event for farm and land equipment.

New equipment and new techniques – Whatever your line – farmer, distributor, cooperative manager, technician or researcher – SIMA features all the latest equipment and techniques: material for farming, processing, storing, transporting, handling or management . . .

Fruit and Vegetables: a major step towards robotization – The fruit and vegetables section is growing all the time at the SIMA. Pending the widespread introduction of picking robots, this part of the exhibition will enable you to take stock of new technique in sorting, conditioning and storage.

A data with tropical farming – Each year, a large tropical farming section at the SIMA entertains a considerable number of vistiros from Africa, Asia and Latin America. On display will be a wide range of equipment for improving farm productivity and profitability under conditions peculiar to tropical and subtropical regions.

The mechanized garden tool market is expanding in two complementary directions: the professional sector (landscape gardeners, public institutions and distribution); and amateur gardening. The 20th International Mechanized Garden Tool and Machinery Show will run concurrently with the 59th SIMA on the same site.

For information contact:
SIMA
24, rue du Pont
92522 NEUILLY-SUR-SEINE
Cedex France

FIMA '89
21st International Conference of Agricultural Mechanization
23rd International Fair of Agricultural Machinery
April 10-13, 1989, Zaragoza, Spain

The presentation of communications in the time and way specified below, can be done through the work sessions foreseen for 10 and 11 April, and can deal with any theme referring to agricultural mechanization providing that they adjust to the sections established in the following classification:

- Driving and stationary machines:
  - Motors.
  - Tractors.
  - Motor ploughs.
  - Agricultural airships.

- Equipment for preparing and preserving the soil:
  - Water harnessing.
  - Drainage.
  - Country road construction.
  - Levelling.
  - Primary soil preparation.
- Equipment for soil working:
  - Deep ploughing.
  - Preparation of seed bed.
  - Ploughing between lines.
  - Others.
- Safety and ergonomy.
- Tests, homologation and standardization.
- Equipment for:
  - Seeding, planting and transplants.
  - Distribution of organic and mineral fertilizers.
  - Irrigation.
  - Plant protection.
  - Test areas.
- Equipment for harvesting:
- Equipment for post-havesting
  - Harvest cleaning.
  - Choice of harvested products.
  - Drying, conditioning, preservation, etc of crops.
- Physical properties of agricultural products.
- Machinery automation.
- Safety and ergonomy.
- Application and energy saving in agriculture.
- Energy coming from Biomass.
- Biogas production technologies.
- Applications of electric energy to country environment.
- Application of solar energy to country environment.
- Transport equipment.
- Handling equipment.
- Storage structures.
- Machines and equipment for animal production.
- Glass house equipment.

On April 12 the plenary session will take place on the specific theme:

Also, on 13 April, an International Demonstration of Tilling and Soil Preservation Techniques will take place, organized, as usual, by the General Offices of Agricultural Production of the Ministry of Agriculture, Food and Fisheries.

All the Conference sessions will be held in the International Centre of Exhibitions and Congresses of Zaragoza Trade Fair (Ctra. Nacional II, km. 311) coinciding with the holding of the 23rd International Agricultural Machinery Technical Fair-FIMA.

Conference Secretariat:
FIMA
Ctra. Nacional II, km. 311
Apartado de Correos LO8
E-50012 Zaragoza

4th International Congress on Mechanization and Energy in Agriculture
October 1-4, 1990, Adana, Turkey

The congress: After successful conferences in Anakara, 1981, 1984 and izmir 1987 a fourth conference is now announced to take place in Adana on October 1-4, 1990.

The major aim of this congress is to bring together experienced scientists around the agricultural mechanization and engineering aspects. Well-known scientists from all over the world from developed and developing countries will have the opportunity for exchange of their ideas.

Topics:

– Agricultural mechanization problems and its solutions;

– Design and use of tractors and other agricultural machines;

– Ergonomics and work study;

– Management of agricultural machines;

– Soil cultivation, seedbed preparation, spraying, irrigation, fertilization and harvesting applications;

– Drying, processing, storage and handling of crops;

– Physical properties of crops;

– Application of electrics and electronics in agriculture, testing and instrumentation;

– Energy saving techniques, renewable energy use in agriculture.

Congress Languages: Lectures: English and Turkish, simultaneous translation will be provided. Posters: English.

Call for Papers: All abstracts which contain at most 200 words, must reach to the Organization Committee before April 1, 1989 and should clearly indicate the original nature of the research or design work concerned.

The papers selected by the organization committee of the Congress, will be informed to their authers in October 1989 either their papers accepted or not and how they will be presented. The further information will be given with the second announcement.

Approximate Cost:

* Registration fee $150 (including proceedings and meals)
* Ladies programme (free)

Exhibition: An agricultural machinery show will be organized in parellel to the Congress in the city, all domestic and international companies will be invited to this exhibition.

Social Events: After the Congress, a visit to the historical Cappadocia, the Old Rock Churches and the Underground Cities in the Middle Anatolia, and some other social events will be organised as well as ladies' program.

Supporting Foundations:

* University of Çukurova
* Commission Internationale du Génie Rural
* National Productivity Center

BOOK REVIEW

Publications by the American Society of Agricultural Engineers, 2950 Niles Rd., St. Joseph, Michigan 49085, U.S.A.

Following are the titles and other particulars of publications received from ASAE.

Physical and Chemical Properties of Food. Edited by Martin R. Okos. 1986. 407 pages.

Water Resources Law. Proceedings of the National Symposium on Water Resources Law. December 15-16, 1986, Hyatt Regency, Chicago, Illinois. 243 pages. $32.00.

Latest Developments in Livestock Housing. Seminer of the 2nd Technical Section of the C.I.G.R. University of Illinois, Urbana-Champaign, Illinois, USA, June 22-26, 1987. 417 pages. $37.85.

Optimum Erosion Control at Least Cost. Proceedings of the National Symposium on Conservation Systems. December 14-15, 1987. Hyatt Regency Chicago in Illinois Center. 418 pages. $39.00.

Drainage Design and Management. Proceedings of the Fifth National Drainage Symposium. December 14-15, 1987, Hyatt Regency Chicago in Illinois Center. 439 pages. $43.00.

Livestock Environment III. Processings of the third International Livestock Environment Symposium. April 25-27, 1988. Constellation Hotel, Toronto, Ontario, Canada, 470 pages. $39.00.

Fundamentals of Electricity for Agriculture. 2nd Edition. By Robert J. Gustafson. 1988. 411 pages. Hardbound. List price $38.00.

On-Site Wastewater Treatment Vol. 5, Proceedings of the Fifth National Symposium on Individual and Small Community Sewage Systems, December 14-15, 1987. 411 pages. $39.50.

Publications by International Rice Research Institute
P.O.Box 933, Manila, Philippines

Following are the titles and other particulars of publications received from IRRI.

Rice Grain Quality and Marketing. Papers presented at the International Rice Research Conference, 1-5 June, 1985. 74 pages.

Insights of Outstanding Farmers. 1985.

Publications of the International Agricultural Research and Development Centers. 1985. 691 pages. US$10.20.

1986 Supplement. Publications of the International Agricultural Research and Development Centers. 167 pages. US$4.00.

IRRI Highlights 1983 – Accomplishments & Challenges. 1986.

World Rice Statistics 1985. 271 pages.

Progress in Upland Rice Research – Proceedings of the 1985 Jakarta Conference. 1986. 567 pages.

Friends of the Rice Farmer – Helpful Insects, Spiders, and Pathogens. By B.M. Shepard, A.T. Barrion, and J.A. Listingrer, 1987. 127 pages.

A Farmer's Primer on Growing Cowpea on Riceland by R.K. Pandey. 1987. 218 pages.

A Farmer's Primer on Growing Soybean on Riceland by R.K. Pandey. 1987. 216 pages.

Agricultural Engineering – Made in Germany

(West Germany)

by Association of German Manufacturers of Agricultural Machines and Tractors

The purpose of this brochure is to introduce the industry of agricultural engineering of the Federal Republic of Germany. 50 firms geared to export with their products outline the efficiency of this industrial branch.

The German industry of agricultural machines and tractors is one of the most important and largest sectors of the mechanical industry and 48 000 persons are directly employed in the manufacturing plants and as many again in sales and in the supplies industry. Today the association comprises 156 manufacturers whose total turnover in 1987 amounted to about 6.6 billion DM. About 60% of the total turnover are exports. In 1987 exports amounted to 3.7 billion DM, more than 140 countries of the world received German machines.

For further copies contact: Landmaschinen-und Ackerschlepper-Vereinigung (LAV) im VDMA
Postfach 710864
D-6000 Frankfurt 71
West Germany

INQUIRY and REQUEST to AMA

Please let us know your need. We shall promptly reply them. Inquire on any catalog listed in the advertisement in this issue. We shall try our best to serve you. We welcome articles of interest to agricultural mechanization.

Fill in the reverse side of this card and send us by sealed letter.

FARM MACHINERY INDUSTRIAL RESEARCH CORP.

7-2 Kanda Nishikicho Chiyoda-ku Tokyo-Japan 101

ADVERTISED PRODUCTS INQUIRY

Product	Advertiser	Vol., No., Page

EDITORIAL REQUEST TO AMA

Your Name :

Address :

Occupation :

SUBSCRIPTION/ORDER FORM

AGRICULTURAL MECHANIZATION IN ASIA, AFRICA AND LATIN AMERICA (AMA)

Issued Quarterly

Subscription Rate (includes surface mail postage)

Annual (4 issues) ----------¥.6,000
Single copy ----------¥.1,700

Back Issues (1971−75, ¥.2,000 per copy)
(1976−77, ¥.1,200 per copy)
(1978−80, ¥.1,500 per copy)

★Spring, 1971	□Vol.7 No.2, Spring, 1976	□Vol.9 No.4, Autumn, 1978
□Vol.2 Autumn, 1971	□Vol.7 No.3, Summer, 1976	□Vol.10 No.1, Winter, 1979
□Vol.3 No.1, 1972	□Vol.7 No.4, Autumn, 1976	□Vol.10 No.2, Spring, 1979
□Vol.3 No.2, Summer, 1972	□Vol.8 No.1, Winter, 1977	□Vol.10 No.3, Summer, 1979
□Vol.4 No.1, Spring, 1973	□Vol.8 No.2, Spring, 1977	□Vol.10 No.4, Autumn, 1979
□Vol.4 No.2, Autumn, 1973	□Vol.8 No.3, Summer, 1977	★Vol.11 No.1, Winter, 1980
□Vol.5 No.1, Summer, 1974	□Vol.8 No.4, Autumn, 1977	□Vol.11 No.2, Spring, 1980
□Vol.6 No.1, Spring, 1975	□Vol.9 No.1, Winter, 1978	□Vol.11 No.3, Summer, 1980
□Vol.6 No.2, Autumn, 1975	□Vol.9 No.2, Spring, 1978	□Vol.11 No.4, Autumn, 1980
□Vol.7 No.1, Winter, 1976	★Vol.9 No.3, Summer, 1978	★: Indicates issues out of stock.

□ Abstract and Index, 1971-80 (Special Issue, 1983)

(Check issues and number of copies you wish to order)

Back Issues from 1981, ¥.1,700 per copy (Vol. 12 No. 1 and No. 4 are out of stock)
Abstract and Index, Special Issue, 1983, ¥2,000 per copy.

Vol._____ No._____, _____ 19_____, _____ copy/copies

(check one)

□ Please invoice me/us

□ I/We enclose remittance for ¥_____

****

Name: _____

Firm: _____

Position: _____

Address: _____

(block letters)

FARM MACHINERY INDUSTRIAL RESEARCH CORP.

7, 2-chome, Kanda Nishikicho, Chiyoda-ku,
Tokyo 101 Japan
Tel. (03)−291−3671~4, 5718

STAMP

FARM MACHINERY INDUSTRIAL RESEARCH CORP.
7, 2-CHOME, KANDA NISHIKICHO, CHIYODA-KU
TOKYO, 101 JAPAN

1st FOLD HERE

2nd FOLD HERE

INSTRUCTIONS TO AMA CONTRIBUTORS

The Editorial Staff of the AMA requests contributors of articles for publication to observe the following editorial policy and guidelines in order to improve communication and to facilitate the editorial process :

Criteria for Article Selection

Priority in the selection of articles for publication is given to those that –

a. are written in the English language ;
b. are relevant to the promotion of agricultural mechanization, particularly for the developing countries ;
c. have not been previously published elsewhere, or, if previously published are supported by a copyright permission ;
d. deal with practical and adoptable innovations by small farmers with a minimum of complicated formulas, theories and schematic diagrams ;
e. have a 50 to 100-word abstract, preferably preceding the main body of the article ;
f. are typewritten, double-spaced, about 4,000 words (approximately equivalent to 8 pages of AMA-size paper) ; and those that
g. are supported by authentic sources, reference or bibliography.

Rejected/Accepted Articles

a. As a rule, articles that are not chosen for AMA publication are not returned unless the writer(s) asks for their return and are covered with adequate postage stamps. At the earliest time possible, the writer(s) is advised whether the article is rejected or accepted.
b. When an article is accepted but requires revision/modification, the details will be indicated in the return reply from the AMA Chief Editor in which case such revision/modification must be completed and returned to AMA within three months from the date of receipt from the Editorial Staff.
c. "The AMA does not pay for articles published. However, the writers are given collectively 5 free copies (one copy air-mailed and 4 copies sent by surface/sea mail) of the AMA issue wherein their articles are published. In addition, a single writer is given 25 off-prints of the article and plural writers are given 35 off-prints (also sent by surface/sea mail)"

Procedure

a. Articles for publication (original and one-copy) must be sent to AMA through the Co-operating Editor in the country where the article originates. (Please refer to the names and addresses of Co-operating Editors in any issue of the AMA). However, in the absence of any Co-operating Editor, the article may be sent directly to the AMA Chief Editor in Tokyo.
b. Contributors of articles for the AMA for the first time are required to attach a passport-size ID photograph (black and white print preferred) to the article. The same applies to those who have contributed articles three years earlier. In either case, ID photographs taken within the last 6 months are preferred.
c. The article must bear the writer(s) name, title/designation, office/organization, nationality and complete mailing address.

Format/Style Guidance

a. Whether the article is a technical or popular contribution, lecture, research result, thesis or special report, the format must contain the following features :
   i) a brief and appropriate title ;
   ii) the writer(s) name, designation/title, office/organization ; and mailing address ;
   iii) an abstract following ii) above ;
   iv) body proper (text/discussion) ;
   v) conclusion/recommendation ; and a
   vi) bibliography
b. The pages must be numbered (Arabic numeral) successively at the top center. Tables, graphs and diagrams must likewise be numbered. Table numbers must precede table titles, e.g., "Table 1. Rate of Seeding per Hectare". Such table number and title must be typed at the top center of the table. On the other hand, graphs, diagrams, maps and photographs are considered figures in which case the captions must be indicated below the figure and preceded by number, e.g., "Figure 1. View of the Farm Buildings".
c. Tables and figures must be preceded by texts or discussions. Inclusion of such tables and figures not otherwise referred to in the text/discussion must be avoided.
d. Tables must be typed clearly without vertical lines or partitions. Horizontal lines must be drawn only to contain the sub-title heads of columns and at the bottom of the table.
e. Express measurements in the metric system and crop yields in metric tons per hectare (t/ha) and smaller units in kilogram or gram (kg/plot or g/row).
f. Indicate by footnotes or legends any abbreviations or symbols used in tables or figures.
g. Convert national currencies in US dollars and use the later consistently.
h. Round off numbers, if possible, to one or two decimal units, e.g., 45.5kg/ha instead of 45.4762kg/ha.
i. When numbers must start a sentence, such numbers must be written in words, e.g., Forty-five workers . . . , or Five tractors . . ." instead of 45 workers . . , or, 5 tractors.

Co-operating Editors

-- AFRICA --

Julien G. Van Lancker
Professor Visitor (Agricultural Engineering), University of Brundi, Brundi

Edward A. Baryeh
Professor, ENSIAAC, BP455, Nagaounde, Cameroon

Ali Mahmoud El Hossary
Senior Under-Secretary for Engineering Affairs, Ministry of Agriculture, Dokki, Cairo, Egypt

Arumugam Kandiah
Institute of Agricultural Research, P.O. Box. 2003, Addis Ababa, Ethiopia.

David Boakye Ampratwum
Part-Time Lecturer, Agricultural and Food Engineering, University of Ghana, Legon, Ghana

Richard Jinks Bani
Lecturer & Co-ordinator, Agric. Engineering Div., Faculty of Agriculture, University of Ghana, Legon, Ghana

Israel Kofi Djokoto
Senior Lecturer, University of Science and Technology, Kumasi, Ghana

David Kimutai arap Some
Lecturer, Dept. of Agric. Engineering, University of Nairobi, Nairobi, Keniya

Md. Shahansha Uddin Choudhury
Professor of Agricultural Engineering, University of Sokoto, P.M.B. 2346, Sokoto State, Nigeria

Joseph Chukwugozium Igbeka
Associate Professor, Dept. of Agricultural Engineering, Faculty of Technology, University of Ibadan, Ibadan, Nigeria

E.U. Odigboh
Professor & Head of Agricultural Engineering Department, University of Nigeria, Nsukka, Nigeria

Kayode C. Oni
Senior Lecturer, Dept. of Agric. Engineering, University of Ilorin, P.M.B. 1515, Ilorin, Nigeria

N.G. Kuyembeh
Dean, Faculty of Agriculture and Head, Dept. of Agric. Engineering, Njara University College, University of Sierra Leone, Sierra Leone

Abdien Hassan Abdoun
Member of Board, Amin Enterprises P.O. Box 1333 Khartoum, Sudan

Amir Bakheit Saeed
Lecturer, Dept. of Agric. Engineering, Faculty of Agriculture, University of Khartoum, Khartoum, Sudan

Abdisalam I. Khatibu
National Project Coordinator and Director, FAO Irrigated Rice Production, Zanzibar, Tanzania

Solomon Tembo
Lecturer and Acting Chairman, Dept. of Soil Science and Agric. Engineering, University of Zimbabwe, Harare, Zimbabwe

-- AMERICAS --

Irenilza de Alencar Nääs
Professor, Agricultural Engineering College, UNICAMP, Agricultural Construction Dept., P.O. Box 6011, 13081 – Campinas – S.P., Brazil

Abdelkader Elmetwally Ghaly
Associate Professor, Agric. Engineering Dept., Faculty of Engineering, Technical University of Nova Scotia, Halifax, Nova Scotia, Canada

A.A. Valenzuela
Dean, College of Agriculture, University of Concepción-Chile Chillan, Chile

Armed Hossain Mirdha
Professor & Head, Area of Research in Agril. Production, Academic Div. of Agril. & Livestock Sc., Sierra Unit. Autonomous University Juarez of Tabasco, Apdo. Posta-960, Admon. de Correos No. 2 Villahermosa, C.P. 86100 Tabasco, Mexico

William J. Chancellor
Professor, Agricultural Engineering, University of California, Davis, California 95616, U.S.A.

Merle L. Esmay
Professor Emeitus, Agricultural Engineering, Michigan State University, East Lansing, Michigan 48823, U.S.A.

Megh Raj Goyal
Associate Agric. Engineer, Fruits Substation HC-02 – Box 7115, Juana D'ıaz, PR, 00665-9601 U.S.A.

Allan L. Philips
Director, Agric. Engineering Dept., the University of Puerto Rico, Mayaguez, Puerto Rico 00708, U.S.A.

-- ASIA and OCEANIA --

Shah M. Farouk
Professor, Dept. of Farm Power & Machinery, Bangladesh Agricultural University, Mymensingh, Bangladesh

Mohammed A. Mazed
Chief Scientific Officer & Head of Agric. Engineering Div., Bangladesh Agricultural Research Institute, Joydebpur, Dhaka, Bangladesh

Manbahadur Gurung
Horticulture Extention Officer, Ministry of Development, Dept. of Agriculture, HA Bhutan P.O. HAA, Bhutan

Wang Wanjun
Chief Engineer & Vice Director of the Chinese Academy of Agricultural Mechanization Sciences, No. 1 Belshatan, Deshengmen Wai, Beijing, China

Satish Chandra
Assistant Director of Agriculture, Koronivia Research Station, Ministry of Agriculture and Fisheries, P.O. Box 77, Narsori, Fiji

A.M. Michael
Director, Indian Agricultural Research Institute, New Delhi 110012, India

J.P. Mittal
Project Coordinator, All India Coordinated Research Project on Energy Requirements in Agric. Sector, College of Agric. Engg., Punjab Agric. Univ. Ludhiana, India

A M Michael

J.P. Mittal

T P Ojha

S R Verma

Soedjatmiko

M Behroozi-Lar

J Sakai

B A Snobar

C J Chung

Imad Haffar

M Z Bardale

B K Shrestha

M Afzal

A D Chaudhry

M S Chaudhry

B T Devrajani

A Q Mughal

Surya Nath

R M Lantin

B P Venturina

T.P. Ojha
Director, Central Institute of Agricultural Engineering, Nabi Bagh, Berasia Road, Bhopal 462018, India

S.R. Verma
Dean, College of Agric. Engineering, Punjab Agricultural University, Ludhiana 141004, India (Presently; Chief Adviser to Head, National Centre for Agric. Mechanization, P.M.B. 1525, Ilorin, Nigeria)

Soedjatmiko
Head of Subdirectorate of Agric. Engineering, Ministry of Agriculture, Jakarta, Indonesia

Mansoor Behroozi-Lar
President, Iranian Society of Agricultural Machinery Engineers, P.O. Box 31585-574, Karaj, Iran

Jun Sakai
Professor, Dept. of Agric. Engineering, Faculty of Agriculture, Kyushu University 46-05, Hakozaki, Higashi-ku, Fukuoka B12, Japan

Bassam A. Snobar
Professor & chairman, Plant Production Dept., Faculty of Agriculture, University of Jordan, Amman, Jordan

Chang Joo Chung
Professor, Dept. of Agric. Engineering, College of Agriculture, Seoul National University, Suweon, Korea 170

Imad Haffar
Assistant Professor of Agric. Mechanization, Dept. of Soils, Irrigation and Mechanization, Faculty of Agriculture and Food Sciences, American University of Beirut, Beirut, Lebanon

Muhamad Zohadie Bardaie
Associate Professor, Faculty of Engineering, Universiti Pertanian Malaysia, 43400 UPM, Serdang, Selangor, Darul Ehsan, Malaysia

Bala Krishna Shrestha
Agricultural Engineer, 4/141, Pulchowk Behind the Fire Brigade, Lalitpur, Nepal.

Mohammad Afzal
Senior Engineer (Mechanization Engineer), Farm Machinery Institute, National Agric. Research Centre P.O. NIH, Islamabad, Pakistan

Allah Ditta Chaudhry
Associate Professor & Charman, Dept. of Farm Machinery and Power, Agric. Engineering and Technology, University of Agriculture, Faisalabad, Pakistan

Muhammad Siddique Chaudhry
280 Roger Williams Ave. #35 East Providence, R.I. 02916, U.S.A.

Bherulal T. Devrajani
Principal Investigator, Sind Agriculture University, Tandojam, Sind, Pakistan

A.Q. Mughal
Professor & Dean, Faculty of Agricultural Engineering, Sind Agriculture University, Tandojam, Sind, Pakistan

Surya Nath
Lecturer II (Agric. Engineering) Dept. of Agriculture, University of Technology, Lae, Papua New Guinea

Reynaldo M. Lantin
Agricultural Machinery Expert. Regional Network for Agricultural Machinery, c/o United Nations Development Programme P.O. Box 7285 ADC Pasay City Metro Manila, Philippines

Richardo P. Venturina
Assistant Scientist for Agricultural Research, National Science Development Board, P.O. Box 3596, Rizal, Manila, Philippines

M.H. Abdel Aziz
Professor of Irrigation Engineering and Head, Agricultural Engineering Dept., Riyadh Univ., Saudi Arabia

S. Illangantileke
Head, Dept. of Agric. Engineering, Faculty of Agriculture, University of Peradeniya, Sri Lanka

Suppiah Kathirkamathamby
Head, Agricultural Engineering Research and Development Div., Dept. of Agriculture, Peradeniya, Sri Lanka

Sen-Fuh Chang
Associate Professor, Agric. Machinery Dept. National Taiwan University, Taipei, Taiwan

Chanchai Rojanasaroj
Research and Development Engineer, Dept. of Agriculture, Ministry of Agriculture and Cooperatives, Bang-Khen, Bangkok 10900, Thailand

Gajendra Singh
Professor of Agric. Engineering, Div. of Agricultural & Food Engineering, Asian Institute of Technology, GPO 2754, Bangkok 10501, Thailand

Yunus Pinar
Assistant Professor, Agric. Engineering Dep., Faculty of Agriculture, University of Ondokuz Mayis, Kurupelit, Samsun, Turkey

-- EUROPE --

Anastas Petrov Kaloyanov
Professor & Head, Research Laboratory on Farm Mechanization, Higher Institute of Economics, Sofia, Bulgaria

T. Touggaard Pedersen
Professor, Agric. Engineering at the Royal Veterinary and Agricultural University, Copenhagen, Denmark

Giuseppe Pellizzi
Director of the Institute of Agric. Engineering of the University of Milano and Professor of Agric. Machinery and Mechanization, Via G. Celoria, 2-20133 Milano, Italy

Aalbert Anne Wanders
Staff Member, Dept. of Development Cooperation, Netherlands Agricultural Engineering Research Institute (IMAG), Wageningen, Netherlands

John Kilgour
Senior Lecturer in Farm Machinery Design at Silsoe College, Silsoe Campus, Silsoe, Bedford, MK45 4DT, U.K.

A A Wanders

J Kilgour

M H A Aziz

S Illangantileke

S Kathirkamathamby

S F Chang

C Rojanassaroj

G Singh

Y Pinar

A P Kaloyanov

T T Pedersen

G Pellizzi

BACK ISSUES

(Vol 20 No. 1, Winter 1989 ~)

AGRICULTURAL MECHANIZATION IN ASIA, AFRICA, AND LATIN AMERICA (Vol. 19, No. 1, Winter, 1988)

Editorial (Y. Kishida) 7
Farm Mechanization in West Java, Indonesia (G. Singh, H. Siswasumarto) 9
Cost of Operating Tractors on Quetta Farms, Pakistan (S.B. Bukhari, J. M. Baloch, S.H. Naqvi) 14
Mechanical Transplanting of Rice in Pakistan (A.S. Khan, W.W. Gunkel) 21
Design and Development of a 6-Row Korean Transplanter (A.S. Khan, W.W. Gunkel) 27
Field Performance of Seeding Devices in Rainfed Situation in Orissa, India (P.C. Senapati, P.K. Mohapatra, D. Satpathy) 35
The AMRI Sugarcane Planter (M. Yasin, C.A. Salam, M.A. Farooq) . . 39
Mechanization of Sugarcane Ratoon Culture in India (M.P. Sharma, K. Singh) 45
Supplemental Mechanical Weed Control for Maize-Cowpea Rotation in Mucuna Mulch (E.A. Baryeh) . . . 48
Effects of Electrostatic Charging and Vertical Air Current on Deposition of Pesticide on Cotton Plant Canopy (Y. Zeren, E. Moser) 55
Disign and Construction of a Simple Rice Parboiling Hardware for Use in Nigeria (O. Oje) 61
Operational Safety Requirements for Farm Machinery: A Case Study in Pakistan (A.I. Mufti, S.I. Ahmad, I.S. Ahmad, A.P. Chaudhary) 64
Agricultural Mechanization in Orissa, India (S.K. Dash, S.C. Pradhan) . . . 69
Field Reliability of Farm Machinery (A.P. Chaudhary, S.I. Ahmad) 73
Abstracts 44
News 79
Book Review 81

◇ ◇ ◇

AGRICULTURAL MECHANIZATION IN ASIA, AFRICA AND LATIN AMERICA (Vol. 19, No. 2, Spring, 1988)

Editorial (Y. Kishida) 7
A Study on Engineering Design Theories of Hand-Tractor Plows II (S. Phongsupasamit, J. Sakai, T. Kishimoto) 9
Use of Conical Rotors for Multi-purpose Wetland Farming Machines (A.U. Khan, M. Diestro, R. Bautista, E. Calilung, A. Vasallo) 20
Comparative Tractive Performance of Three Tractors (J.G. Shebi, K.C. Oni, F.G. Braide) 25
Comparison of Zero-Tillage and Conventional Tillage in Wheat and Maize Production under Different Soils and Climatic Conditions in Nigeria (P.R. Maurya) 30
Working with Bangkok Clay Soil– Some Experiences (V.M. Salokhe, D. Gee-Clough) 33
Development and Fabrication Techniques of Improved Grubber (G. Singh) 42
A Small Scale, Non-Destructive Tropical Grass Seed Harvester (R.T. Peterson, I. Romero, D.B. Tinker) 47
Handling and Transportation of Vegetables in Ghana (E. Kra, R.J. Bani) 52
Using Agro-Processing Equipment in Enhancing Rural Industrialization in India-Case Studies (R.P. Kachru, P.K. Srivastava, S.D. Deshpande, T.P. Ojha) 55
Small Farmer Mechanization in Chile (E.J. Hetz) 63
Status of Farm Mechanization in Iraq (L.M. Ali, A.M. Al-Khafaf) . . 69
A Successful Model for Introducing Agricultural Machinery (P. Datt, T.P. Ojha) 74
Standardization Efforts in Agricultural Engineering (R.N. Sharma) 77
Abstracts 54
News 82
New Products 83
Book Review 85

◇ ◇ ◇

AGRICULTURAL MECHANIZATION IN ASIA, AFRICA AND LATIN AMERICA (Vol. 19, No. 3, Summer, 1988)

Editorial (Y. Kishida) 7
Modeling Flow of Irrigation Water Discharge Uniformity in Microtube Emitters (M. Gueye, J. Yonemura, A. Sasao, A.R. Shajary) 9
Power Requirements of Different Cropping Systems in Bangladesh (M.A. Hossain) 15
Computer Programme for Selecting Farm Machinery for Small Farms (H.O. Laurel) 20
Design of Extended Octagonal Ring Dynamometer for Rotary Tillage Studies (T.C. Thakur, R.J. Godwin) 23
Wet and Dry Tillage Practices in Paddy Production (A. Majid, S.I. Ahmad, M. Farooq, A.I. Mufti 29
A Compression Ignition Engine on Biogas-Diesel Fuel (T.K. Bhattacharya, B. Singh, T.N. Mishra) 32
A New Multi-crop Inverted-T Seeder for Upland Crop Establishment (M.A. Choudhary) 37
Optimum Sprout Length for Sowing Pre-Germinated Paddy Seed in Puddled Soil (A.P. Srivastava, J.S. Panwar) 43
Performance Evaluation of Mechanical Reapers in Pakistan (G. Singh, A.P. Chaudhary, D. Gee-Clough) . . 47
Cost of Using Power Reapers: Malaysian Experience (K. Aribi, I.Y. Md. Salleh) 53
Threshing Efficiency of Pulses Using Step-wise Regression Technique (S.K. Tandon, B.S. Sirohi, P.B.S. Sarma) 55
Storage of Farm Products in Rural Papua New Guinea (S.N. Misae) 58
Husk Utilized as Fuel (B.S. Pathak, A. Singh) 65
Improved Equipment for Castor Bean Crop Cultivation (A.C. Varshney) 71
Run-off Farming in Ghana: A Mathematical Approach (S.K. Agodzo) 75
Effect of Restrained and Un-Restrained Linkage on Implement Performance (J.M. Baloch, A.N. Mirani, S. Bukhari) 77
Abstracts 82
News 83
Book Review 85

◇ ◇ ◇

AGRICULTURAL MECHANIZATION IN ASIA, AFRICA AND LATIN AMERICA (Vol. 19, No. 4, Autumn, 1988)

Editorial (Y. Kishida) 7
Performance of Selected Tillage Implements (S. Bukhari, M.A. Bhutto, J.M. Baloch, A.B. Bhutto, A.N. Mirani) 9
Effects of Load and Speed on Performance of Clod Crushers (T.C. Thakur, B.P. Varshney, A. Yadav, P. Chand) 15
Development and Testing of Bullock-drawn Land Scraper and Land Grader (S.C. Pradhan, S.K. Dash, H. Raheman) 21
An Animal-drawn Mechanical Ridge Tier for the Cereal Farming Systems of Burkina Faso (J.G. Nagy, H.W. Ohm, L.L. Ames, L.D. Schaber) 25
The Tir Seeding Method and Tir Drills: A Literature Review (M. Yilmaz, N. Yilmaz) 31
Laboratory Studies on Spray Distribution Pattern of the Wide-swath Spray Boom (H.S. Bisen, N.S.L. Srivastava) 34
Comparative Use of Self-propelled and Tractor-drawn Combines (A. Razzaq, C.B. Ahmad, C.B. Ahmad Sabir) 39
Testing and Evaluation of Improved Yaatra Ox-cart (S.D. Deshpande, T.P. Ojha) 44
Modern Food Grain Silos in Bangladesh (J.N. Samaipati, T.T. Pedersen) 49
Possibilities of Mechanizing Paddy Production in Kenya (S. Furuichi, D.K. Some) 53
Potentials for Computer-aided Farm Machinery Decisions in Pakistan (M.A. Choudhary, S.W. Brown) . . 58
Cotton Cultivation in Haryana State, India (V.P. Bahl, D.N. Sharma, M.L. Jain) 63
Performance of Oil Milling Technologies in India (B.S. Pathak, A. Singh, R.N. Verma) 68
A Wood Chip-fired Residential Boiler (K. Jusoff) 73
Alcohol as Tractor Fuel– Is There Any Future? (R. Janius) 75
Abstracts 78
News 79

◇ ◇ ◇

AGRICULTURAL MECHANIZATION IN ASIA, AFRICA AND LATAIN AMERICA (Vol. 20, No. 1, Winter, 1989)
Editorial (Y. Kishida) 7
Comparison of Tillage Equipment for Small Rice Farm (E.J. Calilung, R.E. Stickney) 9
Soil Manipulation with Tillage Implements (S.B. Bukhari, J.Md. Baloch, A.N. Mirani) 17
Puddled Characteristics of Soil with Selected Implements (R. Manian, P. Jivaraj) 20
A Methodology for Performance Evaluation of Puddling Implements (N.K. Awadhwal, C.P. Singh) 25
Comparative Performance of Four-wheel Tractor and Two-wheel Tractor in Small Plots (Md.W. Ullah, S.S. Kofoed, T.T. Pedersen) 27
Simplified Approach for Evaluating Longitudinal Stability of Agricultural Tractors (J. Prasad, G. Meena) 31
Use of Seed-cum-fertilizer Drill in Wheat Crop Production (A.P. Sharma, M.K. Garg, P.S.R. (Gupta) 38
Design Development and Testing of Hand Rotary Broadcasting Device for Seeds, Fertilizers and Granular Insecticides (A. Tajuddin) 41
Selection of Appropriate Solar Pump for Agricultural Applications (K. Malhotra, M. Kaur) 45
Socio-economic and Technical Performance of Mechanical Reapers in the Philippines (F.S. Juarez, B. Duff, A. Te, E. Stickney) 49
Status of Mechanization of Harvesting and Threshing of Soybean in India (S.K. Tandon, J.S. Panwar) 55
Design and Development of Bullock-drawn Potato Digger (A.C. Varshney, K.V. Patel, A.S. Patel) 61
Comparative Performance of Machine Milking Methods in Turkey (M. Nalbant, P. Ulger) 63
Steering of Rear Axle Wheels in Three-axle Trailers (M. Yilmaz) . . . 66
Vegetable Oil Derivatives: Fuel for Diesel Engines (A.R. Tahir, M.Z. Khan, H.M. Lapp) 69
Farm Accidents in Pakistan (A.I. Mufti, S.I. Ahmad, A. Majid) 73
In-service Training for Agricultural Extension Staff in Pakistan (A. Razzaq) 76
Abstracts 44
News 79
Book Review 82

AMA ABSTRACTS AND INDEX, 1971–1980

– A Key to Wealth of Information –

As the AMA enters its 13th year of publication this year, the Editorial Staff deems it appropriate to commemorate the event by publishing "Abstracts and Index 1971-80" in May, 1983 for only ¥2,000 a copy, including sea mail postage.

During the decade 1971-1980, more than a thousand articles were received by AMA from readers and co-editors. Over 600 of these contributions were published from which the abstracts and index in various aspects of agriculture and agricultural mechanization in developed and developing countries were arranged for use as a handy reference by students, government officials, ressearchers and academicians interested in agriculture and agricultural mechanization. For example, at a glance, the abstract and index tell about the content of the article, author and AMA issue number. The publication form is A3 size (18.5 cm x 21 cm) 82 pages.

A limited number of copies are still available for which reason they will be sold on a first-come, first-served basis. In order that interested readers get their copies of the publication, it will be very useful for them (and convenient for the AMA Staff) to fill up the order from inserted in this issue and mail it to –

FARM MACHINERY INDUSTRIAL RESEARCH CORP.

7-2 Kanda Nishikicho, Chiyoda-ku, Tokyo, Japan (Tel. 03/291–5717~8, 3671~4)

Increase your crops with Maruyama Backpack Sprayers and Dusters.

POWER MIST DUSTER
MD150DX

POWER SPRAYER
MS055

POWER SPRAYER
MS045

HAND SPRAYER
M-15P

BRUSHCUTTER
M-40D

Brushcutters are in our production line, too.

For further information, please write to:
MARUYAMA MFG. CO., INC.
4-15, UCHI-KANDA 3-CHOME, CHIYODA-KU, TOKYO, 101, JAPAN
Phone : (03) 252-2285 Telefax : (03) 252-2253 Telex : 222-2161

YAMAMOTO RICE WHITENER
RICEPAL SERIES

VP-30

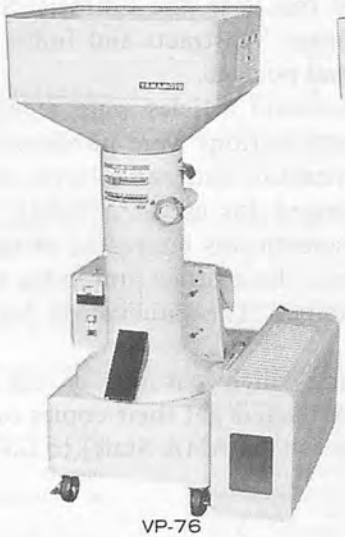

VP-76

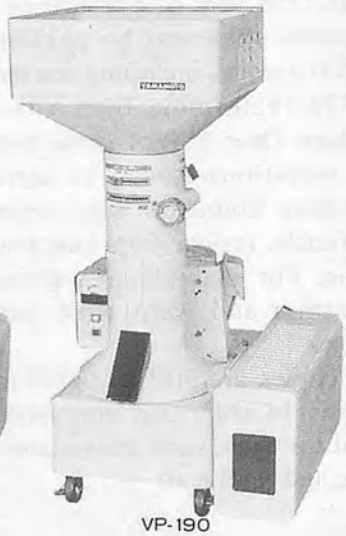

VP-190

- ★ HIGH RECOVERY RATE.
- ★ IMMATURED RICE CAN BE MILLED.
- ★ NO REMAINING RICE IN THE MACHINE.
- ★ EASY TO CHANGE MILLNG SCREEN.
- ★ DURABLE CONSTRUCTION.

EXPERIENCED MANUFACTURER OF POST-HARVEST MACHINERY FOR THE CEREALS.

YAMAMOTO CO., LTD.
HEAD OFFICE & FACTORY : 813-17 TENDO-KO. TENDO-SHI. YAMAGATA-KEN JAPAN
TELEX : 872266 YMCTND J TELEFAX : 0236-54-7781 TELEPHONE : 0236-53-3411

MAMETORA DEDICATES TO AGRICULTURE ALL OVER THE WORLD

Researches and Development
Unequaled Wealth of experiences and technology

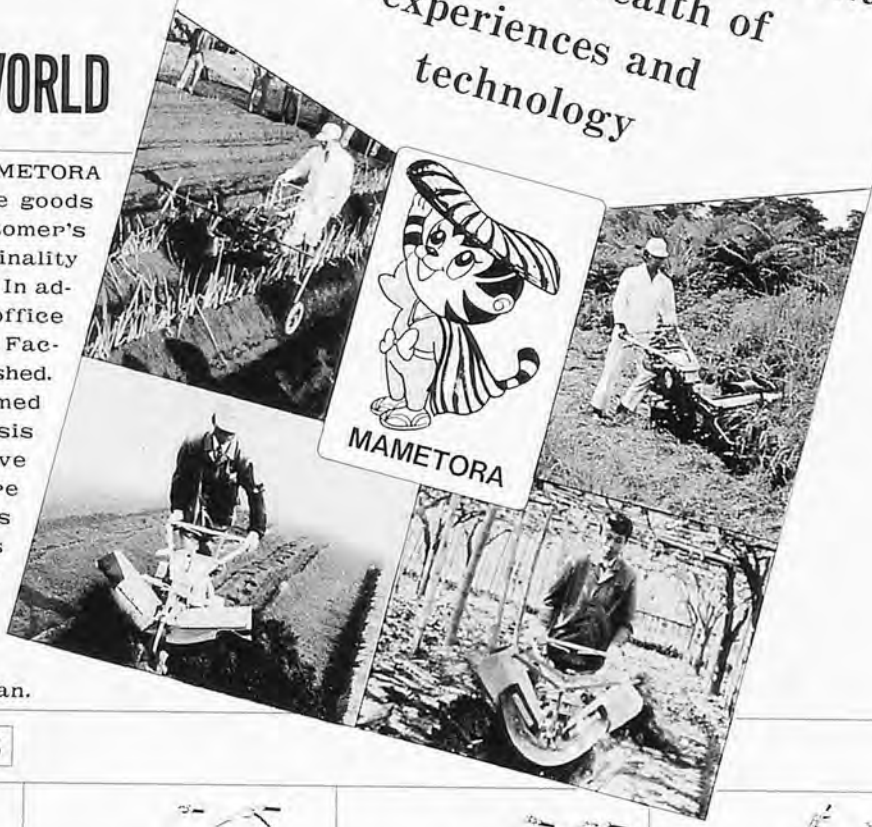

It is the motto of MAMETORA that we manufacture goods in order to meet customer's benefits with originality trusty and hearty. In addition to the head office in Okegawa Kisakata Factory has been established. Now that we have formed the much steadier basis as a comprehensive manufacturer. We are always making efforts to manufacture goods of high quality and are pleased to devote ourselves to the food industry in the world as well as that in Japan.

EXPORT SERIES

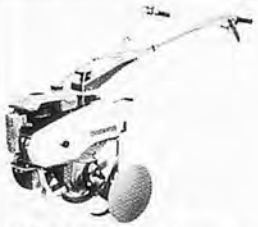

MC-80R Multing Rotor Set

MC-100

MC-130E

MC-181SB

MC-200

MC-210 スキ付

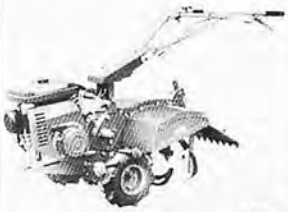

LV-1

LV-2

MAMETORA AGRIC. MACHINERY CO., LTD.

HEAD OFFICE ADD : 9-37, NISHI-2 CHOME, OKEGAWA-SHI, SAITAMA-KEN, JAPAN.
TELEPHONE : 0487-71-1181 TELEX : 2922561 MAMETO-J